TEKTRONIX®

# 4006-1

## COMPUTER DISPLAY TERMINAL

## SERVICE

CUST MODS

STANDARD I/O: J33 - 2 pin
J46 - 2 pin out
J31 - 3+4 strapped, 2+1 open (131-1845-00)
dummy plug in front panel

JH SPECIAL DOOR CORE
DF " PAINT

# BEFORE READING

*PLEASE CHECK FOR CHANGE INFORMATION AT THE REAR OF THIS MANUAL.*

THIS MANUAL REPRINTED OCTOBER 1977

no anti-burn

anti-burn chops the low pulses

J31-1 LF
J31-2 CR

# TEKTRONIX®

dsf **4006-1**

## COMPUTER DISPLAY TERMINAL

## SERVICE

Tektronix, Inc.
P.O. Box 500
Beaverton, Oregon 97077

070-1892-00

First Printing MAR 76

Serial Number _____

01

CUST MODS

STANDARD I/O: J33 - 2 pin
J46 - 2 pin OUT
J31 - 3+4 strapped, 2+1 open (131-1845-00)
dummy plug in front panel.

TH SPECIAL [illegible]
PF " PAINT

STANDARD I/O: P/N 012-0647-00
OPT 1: P/N 614-0126-00

J36

J37

| 1 | 2 | 3 | 4 | 5 | 6 |
|---|---|---|---|---|---|
| -20 | -12 | +15 | NC | +5 | |

1, 2 > -20
3, 4 > -12
5, 6 > +5
7, 8 > +15

J48-7 make copy low pulse, 2 μS
J48-5 anti burn low pulse

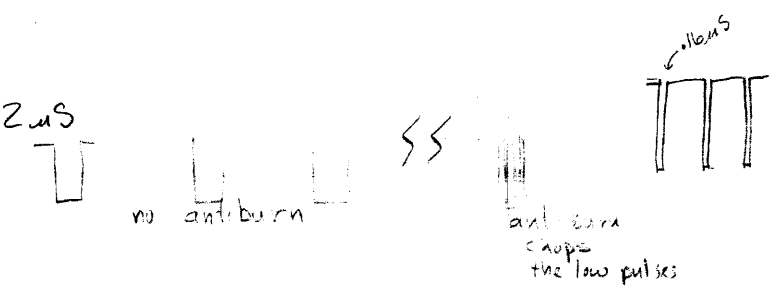


J31-1 LF
J31-2 CR

# TEKTRONIX®

dsf **4006-1**

## COMPUTER DISPLAY TERMINAL

## SERVICE


Tektronix, Inc.
P.O. Box 500
Beaverton, Oregon 97077


Serial Number _____


070-1892-00

First Printing MAR 76

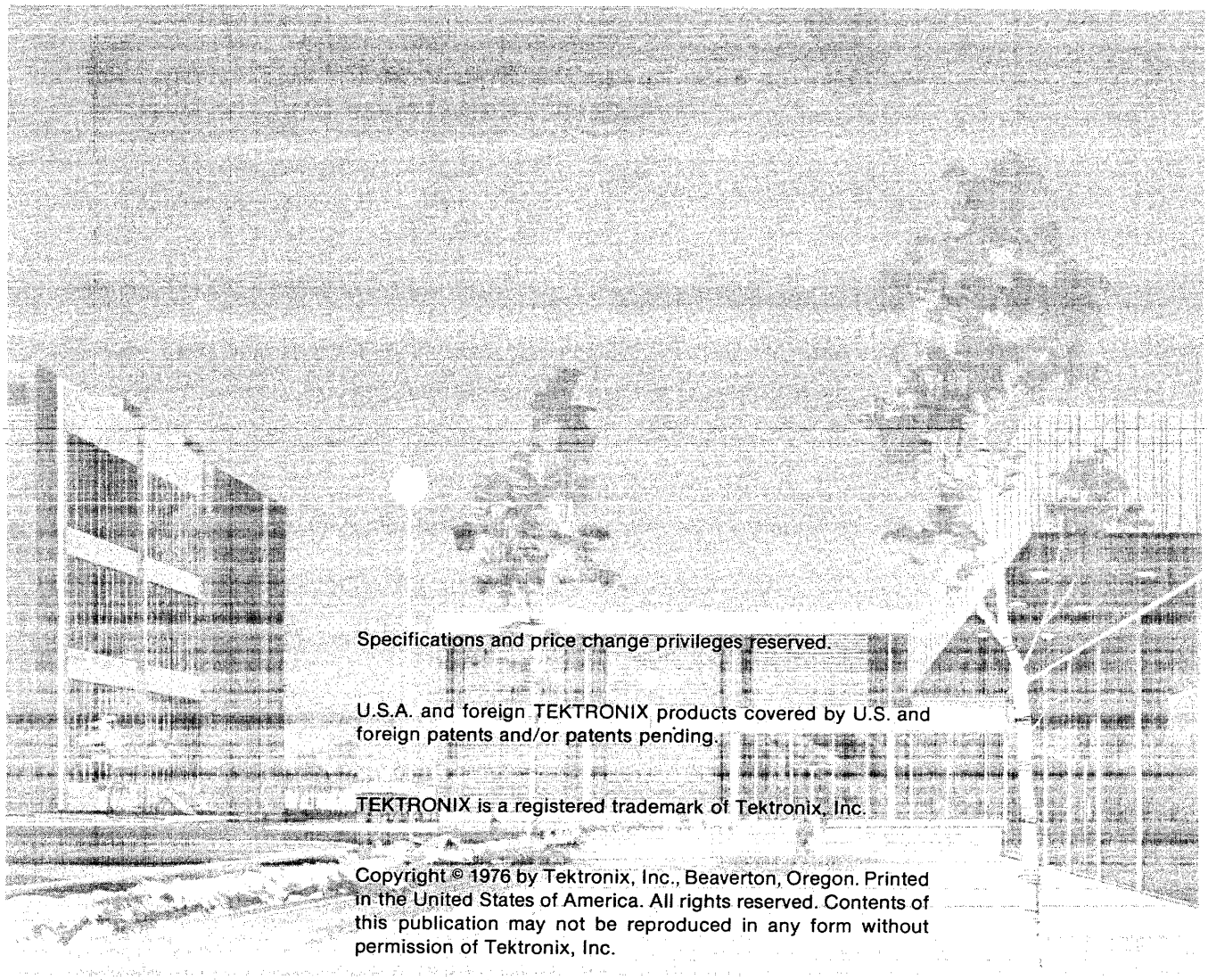

Specifications and price change privileges reserved.

U.S.A. and foreign TEKTRONIX products covered by U.S. and foreign patents and/or patents pending.

TEKTRONIX is a registered trademark of Tektronix, Inc.

Copyright © 1976 by Tektronix, Inc., Beaverton, Oregon. Printed in the United States of America. All rights reserved. Contents of this publication may not be reproduced in any form without permission of Tektronix, Inc.

# TABLE OF CONTENTS


| SECTION 1 | CHARACTERISTICS | Page |
|---|---|---|
| | Introduction | 1-1 |
| | Description | 1-1 |
| | Accessories | 1-1 |
| | Operating Modes | 1-1 |
| | Alpha Mode | 1-1 |
| | Graph Mode | 1-3 |
| | Hard Copy Mode | 1-3 |
| | Indicators and Controls | 1-3 |
| | Multiple Key Entry | 1-4 |
| | Control and Alpha Key Combinations | 1-5 |
| | Control, Shift and Alpha Key Combinations | 1-5 |
| | Control Character Effect on Terminal | 1-5 |
| | Alpha Mode Specifications | 1-6 |
| | Graph Mode Specifications | 1-7 |
| | Graph Mode Vector Drawing | 1-8 |
| | Bytes Required for Graphic Addressing | 1-9 |
| | Local Operation Characteristics | 1-9 |
| | Hard Copy Mode Specifications | 1-10 |
| | Display Unit Specifications | 1-10 |
| | Power Supply Specifications | 1-11 |
| | Physical Characteristics | 1-12 |
| | Environmental Specifications | 1-12 |
| | Strappable Options | 1-13 |
| SECTION 2 | SERVICING | |
| | Introduction | 2-1 |
| | Servicing Procedure | 2-1 |
| | Troubleshooting Information | 2-1 |
| | Troubleshooting Procedure | 2-2 |
| | Recommended Troubleshooting Equipment | 2-2 |
| | Disassembly and Assembly | 2-2 |
| | Removing the Top Cover | 2-2 |
| | Access to Keyboard Circuitry | 2-2 |
| | Power Transformer Information | 2-3 |
| | Display Filter Removal, Cleaning, and Installation | 2-3 |

| SECTION 2 | SERVICING (cont) | Page |
|---|---|---|
| | Crt and Deflection Yoke Removal and Installation | 2-4 |
| | Performance Check | 2-5 |
| | Adjustment | 2-7 |
| | Running Time Meter | 2-11 |
| SECTION 3 | CIRCUIT DESCRIPTION | |
| | Introduction | 3-1 |
| | Dictionary of Line Titles | 3-1 |
| | Basic Concepts of Computer/Terminal Communication | 3-2 |
| | Circuit Block Listing | 3-4 |
| | Circuit Descriptions | 3-5 |
| | Power Supply/Logic Board | 3-5 |
| | Transmit/Receive and Clock Generation | 3-5 |
| | Control Logic | 3-5 |
| | X and Y Axis | 3-6 |
| | Z Axis | 3-7 |
| | Low Voltage Power Supply | 3-9 |
| | Display Board | 3-9 |
| | Deflection Multiplexer | 3-9 |
| | Crt Readout, Storage & +175 Volts Regulator | 3-10 |
| | Deflection Amplifiers | 3-11 |
| | High Voltage and Z Axis | 3-12 |
| | Keyboard | 3-13 |
| SECTION 4 | OPTIONS | |
| SECTION 5 | ELECTRICAL PARTS LIST | |
| SECTION 6 | SCHEMATICS | |
| SECTION 7 | MECHANICAL PARTS LIST | |
| | CHANGE INFORMATION | |

1892-0

Fig. 1-1. 4006-1 Computer Display Terminal.

# Section 1
# CHARACTERISTICS

## Introduction

This manual provides the necessary information for servicing the 4006-1 Computer Display Terminal. Only basic operating information is provided for the service technician; detailed operating information is contained in the 4006-1 Computer Display Terminal Users Manual (070-1891-00). The technical information in this manual is divided into seven sections:

| | |
|---|---|
| Characteristics | A basic description of the terminal and its operation, characteristics, and requirements. |
| Servicing | Contains mechanical component removal and replacement procedures, as well as Performance Check and Adjustment Procedures. |
| Circuit Descriptions | A description of the functional operation of the terminal logic and display circuitry. Also includes a description of the standard computer/terminal interface. |
| Half-Duplex Option | A complete description of the optional Half-Duplex interface. |
| EPL | A complete listing of the electrical parts. |
| Schematics | Complete schematic diagrams of the 4006-1 Computer Display Terminal. |
| MPL | Mechanical parts information. |

## Description

The 4006-1 Computer Display Terminal permits rapid communication between an operator and a computer, providing Alphanumeric and Graphic display of data. Inputs to the computer can be initiated at the terminal keyboard. Data received by the terminal can be written on the Display Unit or can control other functions in the terminal. In addition, the 4006-1 can produce a facsimile copy of the display on a Hard Copy Unit.

The 4006-1 has three principal operating modes: Alpha (Alphanumeric), Graph (Graphic Display), and Hard Copy (HCU). Alpha Mode permits receipt and display of alphanumeric data on the crt. Graph Mode permits control of the input data which causes vectors (graphics) to be written on the display. The HCU mode allows a Hard Copy Unit to make a copy of the displayed data. Data can be entered from the terminal keyboard or transmitted to or from the computer under all modes except HCU mode.

The terminal consists of the keyboard, the display storage crt, the power supply, and control circuits.

## Accessories

The 4006-1 Users manual (070-1891-00) is shipped with each unit. The Service manual (070-1892-00), a Half-Duplex Interface (021-0173-00), and the Viewing Hood (016-0346-01) are optional accessories which can be ordered from Tektronix.

The 4006-1 is compatible with the Tektronix 4631 Hard Copy Unit. The Hard Copy Unit provides the user with the ability to make permanent copies of the displayed information at the touch of a switch. The hard copy of the display screen can also be initiated by a computer command.

## OPERATING MODES

The 4006-1 has three basic operating modes: Alpha, Graph, and Hard Copy. The Alpha mode permits the display, transmission and receipt of alpha characters and special symbols. Graph mode permits the display of graphic vectors and pictures, while the Hard Copy mode allows making of permanent copies of the information on the Display Screen.

## Alpha Mode

In Alpha mode the terminal can display 63 printing characters. On the display screen, the terminal can display up to 74 characters per line, and up to 35 lines per page. The characters displayed are formed by a 5 X 7 matrix. The matrix size is .074 X .13 inch. The actual character size (within the matrix) is .06 X .114 inch.

The valid display characters are shown in Fig. 1-2. All displayed characters are upper case; any lower case characters received from the computer will be displayed

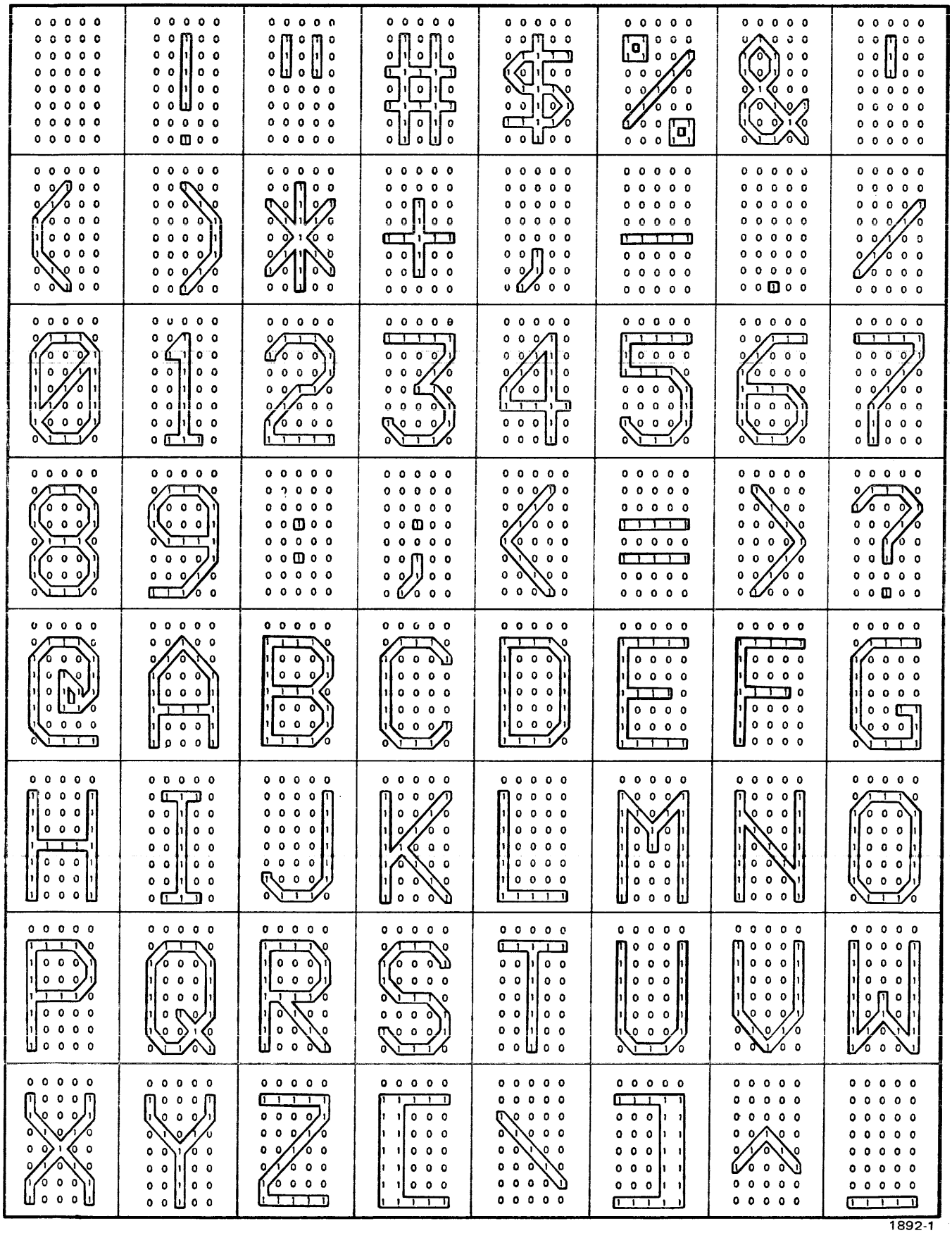


Fig. 1-2. Written character set.

as upper case. The display characters are converted to ASCII code for transmission to and receipt from the computer.

During Alpha mode operation, an automatic carriage return/line feed is performed when the right-hand margin is detected. This occurs after the 74th character has been written in a line. In addition to the 63 printing characters, the space causes the cursor to move one space to the right on the screen. The next writing position on the screen is indicated by an Alpha Cursor. The cursor is displayed any time the terminal is in Alpha mode and is automatically moved each time a character is written.

### Graph Mode

Graphic display (Graph mode) is entered upon receipt of the GS control character; it may be sent from the keyboard or the computer. In Graph mode, the terminal draws vectors in response to graphic address inputs. The vectors may be written on the display screen, or may be unwritten "dark" vectors. The graphic address bytes are explained in detail later in this section.

While in Graph mode, the terminal can still respond to control characters and control character sequences as explained in Table 1-3. Graph mode ends, and the terminal is reset to Alpha mode, upon receipt of control characters US or CR, or the control character sequence ESC FF. Graph mode can also be ended by pressing the PAGE key on the keyboard, which erases the screen and resets to Alpha mode with the cursor in the home position.

### Hard Copy Mode

Hard Copy mode permits a paper "hard copy" of the display to be made if a Hard Copy Unit is connected to the terminal. Hard Copy mode can be initiated by computer command (ESC ETB), by the MAKE COPY key on the terminal keyboard, or by the COPY button on the Hard Copy Unit.

## INDICATORS AND CONTROLS

### General

With exception of the Power switch, Baud Rate select switch, and the Hard Copy Intensity adjustment knob, the indicators and controls are located on the keyboard section of the display unit, as shown in Fig. 1-3. The Power, Hard Copy Intensity Adjustment, and Baud Rate switches are located on the rear of the display unit.

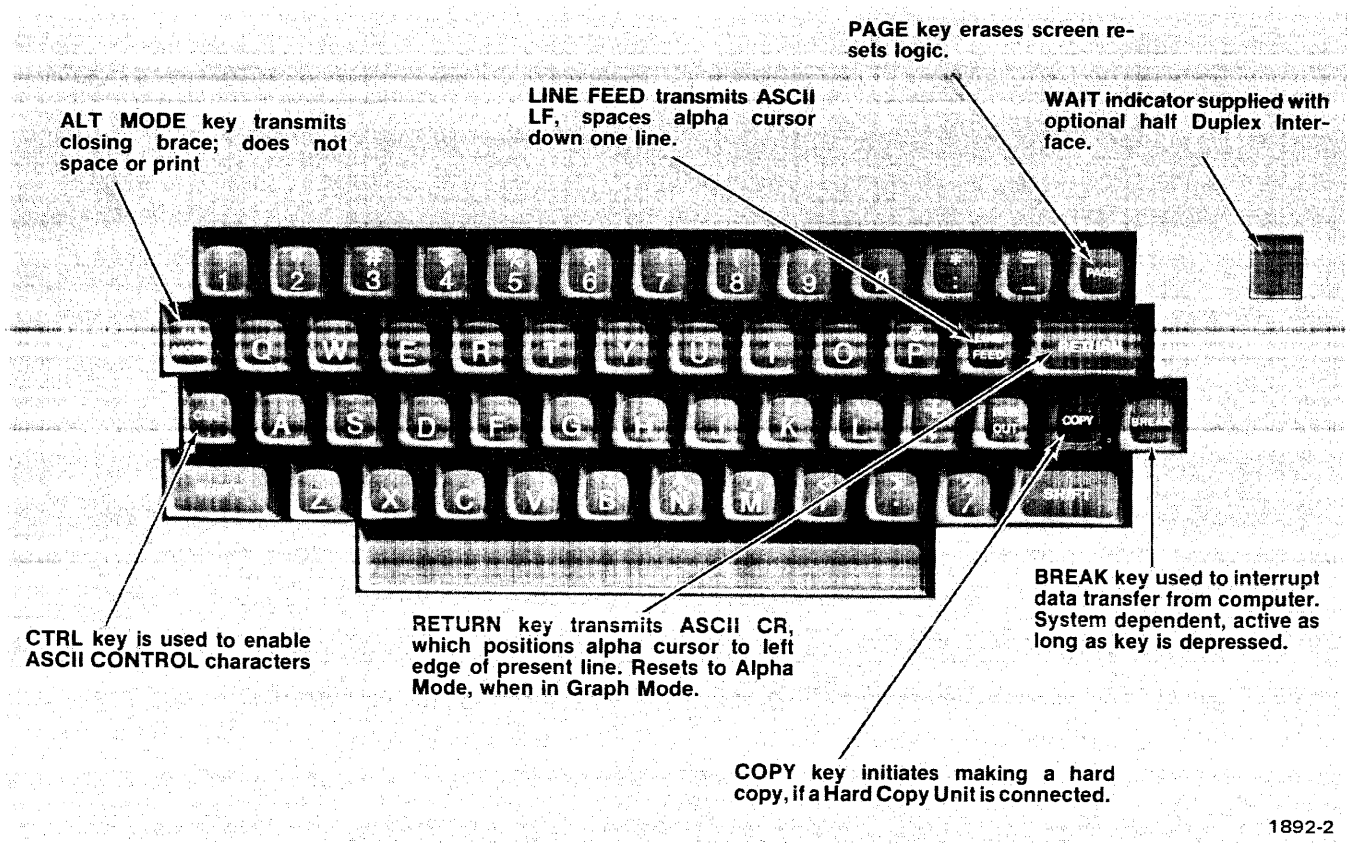


Fig. 1-3. Keyboard Controls.

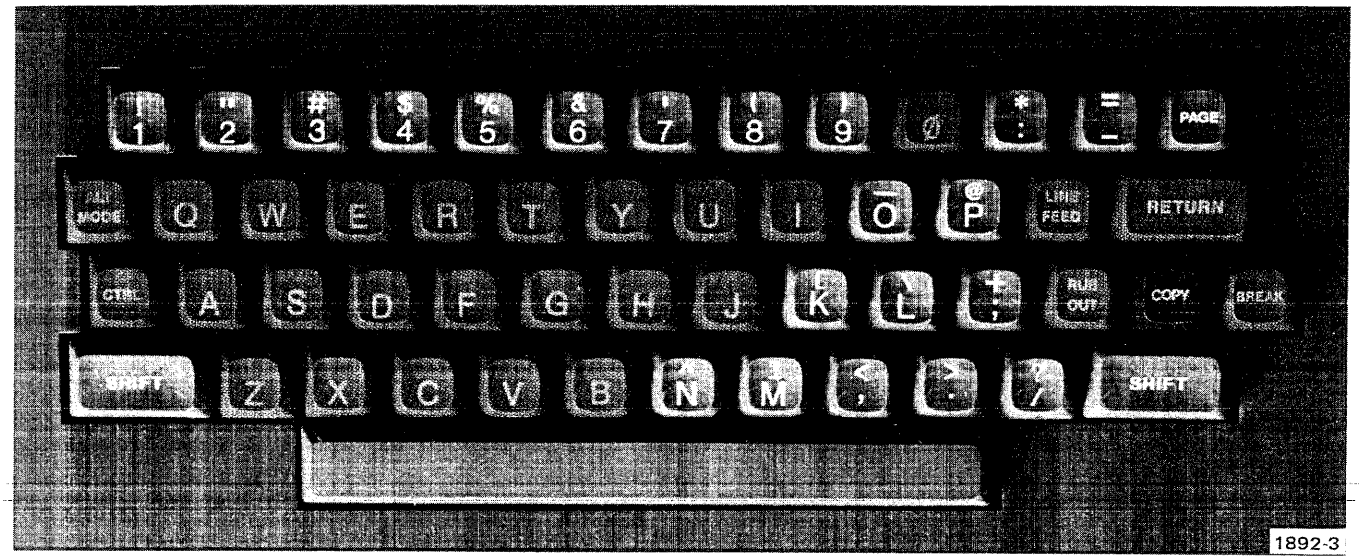


**Fig. 1-4. Keys with Special Shift Functions. Pressing one of these keys while the SHIFT key is depressed causes transmission of the character or symbol above the standard character.**

## Multiple Key Entry

Special functions or alternate characters can be performed using multiple keys for entry. The Shift key can be used with any one of a number of other keys. The ASCII-coded characters sent are then as indicated on the upper section of the keys, as shown in Fig. 1-4.

The CTRL key can be used with any one of the alphabet keys to change their transmitted code to that required for ASCII control characters. The keys are shown in Fig. 1-3 and listed in Table 1-1, along with the ASCII-coded character that is sent when the key is pushed while the CTRL key is held down.

Certain ASCII control character codes require that the CTRL and SHIFT keys both be held down before they can be transmitted in response to pressing a third key. The key combination and resultant characters are as listed in Table 1-2.

BAUD RATE — The BAUD RATE select switch is a dual rotary switch located on the back of the unit. Each switch is a 7-position switch which is used to select the Transmit or Receive baud rates. The switch allow selection of 75, 110, 300, 600, 1200, 2400, or 4800 BAUD.

ECHO — The ECHO switch (with optional Half-Duplex interface only) is located on the back of the unit. The switch allows local echo of transmitted data for display. The ECHO function is enabled by a jumper strap on the logic card for the standard interface.

MODE — The MODE switch is a 3-position slide switch on the rear panel (optional Half-Duplex interface only) which selects FULL DUPLEX, HALF DUPLEX NORMAL, or HALF DUPLEX SUPERVISOR interface operations.

WAIT — The WAIT indicator (Half-Duplex interface only) is mounted on the front of the display module. The WAIT indicator indicates the terminal/interface status.

**TABLE 1-1**

**CONTROL and Alpha Key Combinations**

| Alphanumeric Key | Control Character[1] | Alphanumeric Key | Control Character[1] |
|---|---|---|---|
| A | SOH | N | SO |
| B | STX | O | SI |
| C | ETX | P | DLE |
| D | EOT | Q | DC1 |
| E | ENQ | R | DC2 |
| F | ACK | S | DC3 |
| G | BEL | T | DC4 |
| H | BS | U | NAK |
| I | HT | V | SYN |
| J | LF | W | ETB |
| K | VT | X | CAN |
| L | FF | Y | EM |
| M | CR | Z | SUB |

**TABLE 1-2**

**CONTROL, SHIFT and Alpha Key Combinations**

| Alphanumeric Key | Control Character[2] |
|---|---|
| K | ESC |
| L | FS |
| M | GS |
| N | RS |
| O | US |
| P | NUL |

**TABLE 1-3**

**Control Character Effect on Terminal**

| ASCII | Keyboard Equiv. | Effect |
|---|---|---|
| BEL | CONTROL G | A burst of 1200 hertz tone on the speaker. It's length is 75 ±25 ms. |
| CR | RETURN or CONTROL M | Causes carriage return by clearing the X register. Clears Graph mode (returns to Alpha mode). |
| LF | LINE FEED or CONTROL J | Y (Alpha cursor count) moves down one line (count down by 22). If Y underflows, margin is complemented and Y counts down to 767 (top of display). |
| GS | CONTROL SHIFT M | Sets the terminal for Graph mode. The first vector after a GS is a dark vector. |
| US | CONTROL SHIFT O | Clears the terminal from Graph mode (resets to Alpha mode). Will terminate a vector short of the end point if received before a vector is completed. |
| HT | CONTROL I | Causes the terminal's Alpha cursor to space one character space to the right. |

[1]**Resultant transmission when CONTROL key held down while Alpha key is pressed.**

[2]**Resultant transmission when CONTROL and SHIFT keys are held down while Alpha key is pressed.**

**TABLE 1-3 (cont.)**

**Control Character Effect on Terminal**

| ASCII | Keyboard Equiv. | Effect |
|---|---|---|
| ESC | CONTROL SHIFT K | First character of a special two-character sequence (see ESC FF and ESC ETB). |
| ESC FF | CONTROL SHIFT K CONTROL L | Same as the PAGE signal from the keyboard, except that ESC FF is transmittable. Erases the screen. Reset X to Ø; resets Y to 1023. Y then counts down to 767 at 1.2 MHz. Resets margin and Graph mode. |
| ESC ETB | CONTROL SHIFT K CONTROL W | MAKE COPY is asserted. |

**TABLE 1-4**

**Alpha Mode Specifications**

| | |
|---|---|
| Display Area | 35 lines of 74 characters per line. |
| Character Writing Position | Lower left area (5 X 7 dot matrix) of cursor (8 X 8 dot matrix). |
| Character Matrix Size | .074 (±.008) X 0.130 (±.013) inch. |
| Stored Character Size | .060 (±.006) X .114 (±.012) inch (center-to-center of outside boundary dots). |
| Character Recognition | Complete ASCII code is recognized. |
| Character Writing | Lower case is written as upper case, providing 63 different printing characters. |
| Characters per Line | 74 |
| Number of Lines | 35 |
| LINE FEED Spacing | 22 Tekpoints, equal to 0.168 (±.017) inch. |
| SPACE | 14 Tekpoints, equal to 0.105 (±.011) inch between corresponding points in adjacent characters. |
| Home Position | Top, left corner of display (X=0, Y=767). |
| Carriage Return/ Line Feed | Automatically occurs after last character is written at the end of each line (74th character). Carriage Return also occurs when RETURN key is pressed, or when CR is received. A strap option allows each keyboard or programmed Carriage Return to cause an automatic Line Feed. |

**TABLE 1-4 (cont.)**

**Alpha Mode Specifications**

| | |
|---|---|
| Margin | Left Margin (left edge of quality display area) and Center Margin 1 (horizontal center of quality display area) occur alternately when executing a Line Feed past the 35th line. |
| Rubout | Does not print or space; transmits ASCII DEL. |
| Alt Mode | Does not print or space; transmits ASCII closing brace (}). |
| Alpha Mode set by | PAGE from the keyboard, receipt of ESC FF, CR, or US. |
| Cursor | Non-storing 8 X 8 dot matrix. |
| Hold | Reduced display intensity status, occurs after about 90 seconds of inactivity. Hold mode is reset by any printing data, SHIFT key, DRBUSY, or any Control Character. |
| View | Normal viewing status. |

**TABLE 1-5**

**Graph Mode Specifications**

| | |
|---|---|
| Mode Function | Display graphic information. |
| Mode Entered by | ASCII GS. |
| Mode Ended by | ASCII US, CR, ESC FF, or keyboard PAGE. |
| Basic Unit of Measurement | Point (Tekpoint) |
| Address Capability | 1024X by 1024Y points. |
| Display Capability | 1024X by 780Y points. |
| Display Address Orientation | 0,0 at bottom-left corner of display; 1023X,780Y at (top-right corner of display. |
| Vector Length Error | Does not exceed 1% of true vector length. |

**TABLE 1-5 (cont.)**

**Graph Mode Specifications**

| | |
|---|---|
| Vector Dynamic Geometry Error | Does not exceed 1.5% from mean straight line, worst case (45° line). (Dynamic geometry error is the deviation from the ideal straight line path, divided by the total vector length.) |
| Vector Drawing Time | 3.6 ±0.2 ms, all vectors. |
| Display Scale Factor | Approximately 0.18 mm (.07 inch) point center to point center. (Equal to about 54.5 points per centimeter or 139 points per inch.) |
| Dark Vectors | The first vector following a GS is unwritten; GS can be repeated at any time. The second vector following GS, and all subsequent Vectors, are written. |
| Hold Mode | Display intensity is reduced after about 90 seconds of inactivity. View mode is reset by any printing data, SHIFT key, or DRBUSY. |
| Vector Drawing Commands | Refer to Tables 1-6 and 1-7. |
| Anti-burn Circuit | Chops the Z-axis at 77 kHz if neither axis changes more than 35 ±15 Tekpoints. |

**TABLE 1-6**

**Graph Mode Vector Drawing**

1. GS places the terminal in Graph (vector) mode.

2. The terminal can be addressed to any position within 0-1023X and 0-1023Y, as follows:
   a. Convert the Y coordinate to ten binary digits; convert the X coordinate to ten binary digits.
   b. Form a HIY byte by affixing 01 (as bits 7 and 6) to the five most significant bits of the Y coordinate.
   c. Form a LOY byte by affixing 11 (as bits 7 and 6) to the five least significant bits of the Y coordinate.
   d. Form a HIX byte by affixing 01 (as bits 7 and 6) to the five most significant bits of the X coordinate.
   e. Form a LOX byte by affixing 10 (as bits 7 and 6) to the five least significant bits of the X coordinate.
   f. Send the four bytes as formed in b through e.

**TABLE 1-6 (cont.)**

**Graph Mode Vector Drawing**

3. The LOX byte completes the sequence and causes the writing beam to move to the new position. The first vector after a GS is used for positioning only, and is a dark (unwritten) vector. Subsequent movement in response to a LOX byte is written to form a vector between the two points. GS can be sent at any time to cause the next vector to be dark. (780Y — 1023Y is outside the viewing area of the display.)

4. Address transmission can consist of all four bytes, or can be shortened to three, two, or even one byte(s). Omitted bytes are assumed to be unchanged from the previous address. Table 1-7 specifies the minimum byte transmission required under all addressing situations. (If the terminal is being operated at 4800 baud, and one byte address changes are being used, a 2 ms pause is required between bytes.)

**TABLE 1-6 (cont.)**

**Graph Mode Vector Drawing**

5. HIY, LOY, and HIX bytes received in the last address are "remembered" by the terminal if switched to Alpha mode. The terminal requires only the LOX byte, when switched back to Graph mode, to return to its last address.

6. Graph mode is ended by US, CR, or ESC FF, which reset the terminal to Alpha mode. Graph mode, can also be ended by the PAGE key, from the keyboard.

**TABLE 1-7**

**Bytes Required For Graphic Addressing**

| Bytes Which Change | | | | | Byte Transmission Required | | | |
|---|---|---|---|---|---|---|---|---|
| HIY | LOY | HIX | LOX | | HIY | LOY | HIX | LOX |
| | | | # | | | | | # |
| | | # | | | | # | # | # |
| | # | | | | | # | | # |
| # | | | | | # | | | # |
| | | # | # | | | # | # | # |
| | # | | # | | | # | | # |
| # | | | # | | # | | | # |
| | # | # | | | | # | # | # |
| # | | # | | | # | # | # | # |
| # | # | | | | # | # | | # |
| | # | # | # | | | # | # | # |
| # | | # | # | | # | # | # | # |
| # | # | | # | | # | # | | # |
| # | # | # | | | # | # | # | # |
| # | # | # | # | | # | # | # | # |
| SENDING INITIAL ADDRESS | | | | | # | # | # | # |
| RETURNING TO REMEMBERED ADDRESS | | | | | | | | # |

**TABLE 1-8**

**Local Operation Characteristics[3]**

| | |
|---|---|
| GENERAL | The terminal is isolated from the computer. |
| ALPHA MODE | The terminal accepts keyboard data as though it were coming from a computer, writing alphanumeric characters and executing control characters. |
| GRAPH MODE | Can be obtained by entering CTRL SHIFT M at the keyboard. Terminal will then write vectors in response to keyboard entries of graphic addresses as explained in Tables 1-5, 1-6, and 1-7. The addresses must be converted to alphanumerics before knowing which keys send which address bytes. Low order Y bytes are limited to RUBOUT (DEL) and ALT MODE (closing brace) since the keyboard does not have lower case capability. Dark vectors will follow any CTRL SHIFT M entries. The terminal retains the ability to execute control characters. |

**[3]Local operation refers to terminal operation while the Terminal/Computer interface is not connected. If the normal connection is direct (interface cable from Terminal to Computer) the cable must be disconnected. If communications are through modems (telephone line) local operation is enabled by breaking the telephone link. The ECHO/NORM strap (or switch) must be in ECHO and the Transmit and Receive baud rates must be the same to display data on the screen.**

**TABLE 1-9**

**Hard Copy Mode Specifications**

| | |
|---|---|
| FUNCTION | Display is scanned by signals from the Hard Copy Unit, providing readout information to the Hard Copy Unit. |
| INITIATED BY | READ signal from Hard Copy Unit. (READ occurs in response to a COPY command from the keyboard, a Copy command from the Hard Copy Unit, or an ESC ETB sequence from the computer.) |
| ALPHA CURSOR | Inhibited. |
| HOLD MODE | Inhibited. |
| DISPLAY UNIT | Under control of Hard Copy Unit. |

**TABLE 1-9 (cont.)**

**Hard Copy Mode Specifications**

**TABLE 1-10**

**Display Unit Specifications**

| Characteristics | Performance Requirements | Supplemental Information |
|---|---|---|
| Display Quality Area | 7.5 inches horizonal by 5.625 inches, the center of which is within 0.25 inch of the crt faceplate center. | |
| Deflection Factors<br>Center of Screen<br>Edge of Screen | <br>Zero V (±.2 V)<br>+7.75 V, left or up (±.25 V)<br>−7.75 V, right or down (±.25 V) | |
| Usable Storage Time | | Up to fifteen minutes in View status, or up to one hour in Hold status, without permanent damage to the storage surface. If a residual image is retained after a long viewing period, the target may be returned to normal condition by repeated erasures. |

TABLE 1-10 (cont.)

| Characteristics | Performance Requirements | Supplemental Information |
|---|---|---|
| Line Straightness | Within 0.5% deviation from mean straight line (inside the specified display area). | |
| Geometry<br>Orthagonality<br>Parallelism | <br>$\leqslant 1°$<br>Within ±2% | <br><br>Condition for Test: Draw a rectangle on edge of specified area. Vertical line lengths should be within 2%, and horizontal line lengths should be within 2%. |

TABLE 1-11

Power Supply Specifications

| Characteristics | Performance Requirements | | Supplemental Information |
|---|---|---|---|
| Line Voltage Ranges<br>(−10% to +5%<br>Low<br>Med<br>High | 115 V range<br><br>100 Vac<br>115 Vac<br>120 Vac | 230 V range<br><br>200 Vac<br>230 Vac<br>240 Vac | For continuous low line or high line operation (in any line range), it is suggested that the voltage select jumper be switched to the next voltage range (above or below) to provide better centering within the voltage range. This will ensure maximum crt flood gun life. |
| Power Consumption<br><br>Line Frequency Range | 105 watts maximum<br>1.1 amps maximum current<br>48 to 66 Hz (voltage input +5% to −10%)<br>66 to 440 Hz (voltage input ±5%) | | |
| Fuses<br>Line<br><br>+5 volt | <br>1.6 amp (slow-blow) 100 — 120 Vac<br>.8 amp (slow-blow) 200 — 240 Vac<br>2.5 amp (fast-blow) | | |

**TABLE 1-12**

**Physical Characteristics**

| | |
|---|---|
| Finish | Metal and plastic painted cabinet |
| Weight | Approximately 50 lbs. (23 kg)<br>60 lbs. (27 kg) maximum shipping weight |
| Dimensions (See Fig. 1-3) | |
| Height | 12 3/8 inches |
| Width | 15 1/4 inches |
| Length | 27 1/2 inches |

**TABLE 1-13**

**ENVIRONMENTAL SPECIFICATIONS**

| | |
|---|---|
| Temperature | |
| Non-operating | −40°C to +65°C |
| Operating | +10°C to +40°C |
| Altitude | |
| Non-operating | To 50,000 feet |
| Operating | To 15,000 feet |
| Vibration | Complete 4006-1: 0-50-0 cps<br>.015" displacement |
| Shock (Non-operating) | To 30 g's, 1/2 sine, 11 ms duration |
| Humidity | 0 — 95% non-condensing |
| Transportation | Meets National Safe Transit Committee type of test when packaged as shipped by factory. |

**TABLE 1-14**

**BASIC 4006-1 STRAPPABLE OPTIONS**

| STRAP | DESCRIPTION | REMARKS |
|---|---|---|
| CR→LF<br>OUT<br><br>IN | A two-position strap which can allow the terminal to perform a Line Feed each time a CR is detected. | |
| LINE VOLTAGE | A three-position strap which adapts the Terminal to the existing line voltage. The strap positions for the line voltage are as follows:<br>HI MED LOW<br>120 V 115 V 100 V<br>240 V 230 V 200 V | Two jumper straps are provided, one for the 100 — 200 Vac range and one for the 200 — 240 Vac range. The unused strap is stored on the upper right-hand corner of the logic card. |
| ECHO | A two-position strap that, when in the IN position, enables a local screen copy of the data transmitted from the terminal. The OUT position disables the local copy. | This strap is replaced by a rear panel switch if the optional Half-Duplex interface is installed in the terminal. The transmit and receive baud rates must be set to the same position to obtain local ECHO. |

**TABLE 1-15**

**DATA COMMUNICATIONS INTERFACE STRAPPABLE OPTIONS**

| STRAP | DESCRIPTION | REMARKS |
|---|---|---|
| Modem/Computer | Data Communications Interface, top center (7-pin output connector) | Direct-to-computer connection 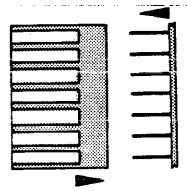 Modem Connection 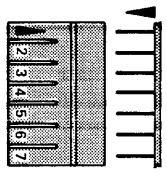  |
| Data Strap | A two-position strap that controls bit 8. The DATA position selects bit 8 as a data bit. The PARITY position selects bit 8 as a parity bit. | See Data Select Strap |
| Data Select | With the data Strap set to DATA, this strap sets bit 8 high or low. With the Data Strap set to PARITY, this strap selects even or odd parity. | |

# Section 2
# SERVICING

## INTRODUCTION

Beyond the need for occasional cleaning of the face of the display and other outer surfaces of the terminal, there is virtually no need for routine servicing of the terminal. It has no lubrication points, no air filters, and (with the exception of the crt) no vacuum tubes. The solid-state components provide stable operation, with little need for routine adjustment.

However, if a routine schedule and procedure is desired, a one-year interval and the following sequence is recommended. The disassembly and assembly instructions contained in this section should be referred to as necessary.

### Servicing Procedure

1. Disconnect the line cord from the power source.

2. Remove the top from the terminal.

3. Using a vacuum cleaner, remove dust accumulation from within the unit. Use a soft-bristled brush to loosen dust which won't otherwise vacuum out. A soft cloth and a mild soap and water solution can be used to remove any really stubborn dirt.

4. Inspect the interior of the unit for broken leads, loose connections, heat-damaged components, etc. Correct as necessary. Investigate the cause of any heat-damaged components.

5. Remove the filter from the front of the display screen. (Refer to the procedure later in this section.) Then wash the face of the crt and the back surface of the filter, using a soft cloth and a mild soap and water solution. Then replace the filter. *THIS STEP SHOULD NOT NORMALLY BE NECESSARY, SINCE A NEOPRENE MOUNTING RING SEALS THE SPACE BETWEEN THE FACE OF THE CRT AND THE FILTER. IT IS RECOMMENDED ONLY IF DIRT IS VISIBLE BETWEEN THE TWO SURFACES, OR IF THE DISPLAY APPEARS EXCESSIVELY DIM AND DIRT ACCUMULATION IS SUSPECTED.*

6. Perform the check-out procedure found in this manual. Perform the adjustment procedure if the check-out procedure indicates that it is necessary.

7. Put the cover back on the terminal.

8. Clean the outside of the unit, using a soft cloth and a mild soap and water solution. Use particular care in cleaning the external surface of the display filter.

## TROUBLESHOOTING INFORMATION

Troubleshooting of the terminal can be done best if the various features of this manual are used to their fullest advantage. These features and recommended usage are listed here.

**Controls and Operation.** This information located in the Characteristics section, ensures operator understanding of the terminal features and operation. Operation is described in detail in the 4006-1 Users manual.

**Specification.** A complete explanation of the terminal capabilities is contained in the Specification section, along with explanations of how to put the capabilities into use.

**Performance Check.** This provides a rapid means of checking for proper operation in a logical sequence under normal equipment configuration.

**Adjustment.** The procedure follows a logical sequence of adjusting the basic terminal.

**Block Overlays and Circuit Diagrams.** These diagrams and their associated descriptions provide an understanding of terminal operation at the circuit and component level. The information contained therein is essential to efficient location of trouble.

**Component Layout Illustrations.** These appear in the Diagrams section and can be used as aids for locating components.

**Semiconductor Information.** An illustration of semiconductors appears near the beginning of the Diagrams section, and can be used for pin identification. An integrated circuit test clip is recommended for use in troubleshooting the in-line integrated circuits, since it makes their leads easily accessible.

### Troubleshooting Procedure

To troubleshoot the basic terminal, check operation by doing the Performance Check. Stop where the terminal fails to respond properly, and troubleshoot the referenced area, using schematics, and associated descriptions.

Obviously, not all troubles can be high-lighted by the Performance Check or Calibration Procedure. However, they should prove beneficial in most cases, and should go a long way in guiding a technician to the trouble area.

### Recommended Troubleshooting Equipment

A −25 V to +400 V dc voltmeter and a 10 MHz frequency response oscilloscope are recommended test equipment for troubleshooting low-voltage and logic circuits. A −4000 V dc meter is required for tourbleshooting the high voltage circuits.

**WARNING**

*Dangerous voltages exist within the display unit. Normal electrical safety precautions should be observed at all times when working around exposed circuits within the unit.*

When troubleshooting the Power Supply circuits, J37 on the Power Supply/Logic board may be disconnected to isolate the Power Supply from the logic circuits on the same board. This avoids accidental damage to these other circuits. In addition, the power supply may be completely isolated by disconnecting all of the power supply output connectors (refer to the Low Voltage Power Supply schematic diagram). If this is done, however, it will be necessary to connect a resistive dummy load (40 Ω, 10 W) to the +20 volt supply in place of the terminal circuits.

**CAUTION**

*If a resistive load is not used when the +20 volt supply is disconnected, damage to components may occur.*

## DISASSEMBLY AND ASSEMBLY

### Removing the Top Cover

For access to the Display, Logic, and Power Supply circuits within the terminal, remove the screws at the rear of the top cover. Then lift the top cover forward and up (refer to Fig. 2-1). To replace the cover, reverse the above procedure.

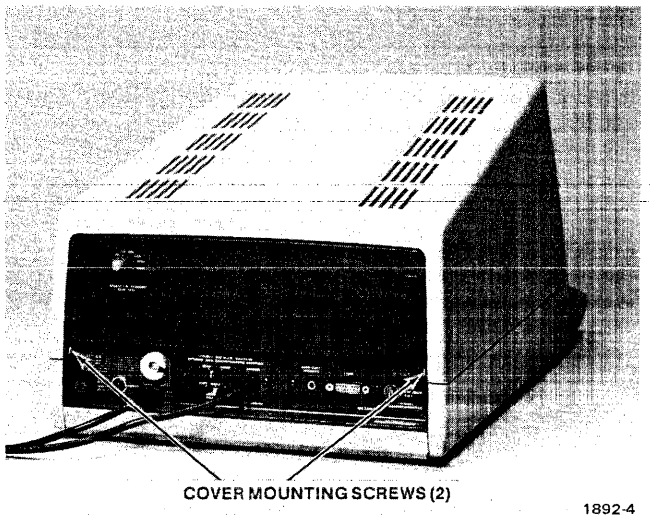


**Fig. 2-1. Removing the Cover.**

### Access to the Keyboard Circuitry

Perform the following procedure to gain access to the keyboard circuits:

1. Remove the two screws from underneath the front of the keyboard. Disconnect J20 of the Half-Duplex board, if that option is installed.

2. Lift the keyboard out as far as the cables will allow. Then turn the keyboard over.

3. The top surface of the circuit board can be accessed by removing the six screws which hold the keyboard assembly to keyboard panel.

Key caps can be removed by pulling them directly away from the keyboard.

Keys can be removed by unsoldering the two contacts which hold them to the circuit board, and lifting them out of their access slots.

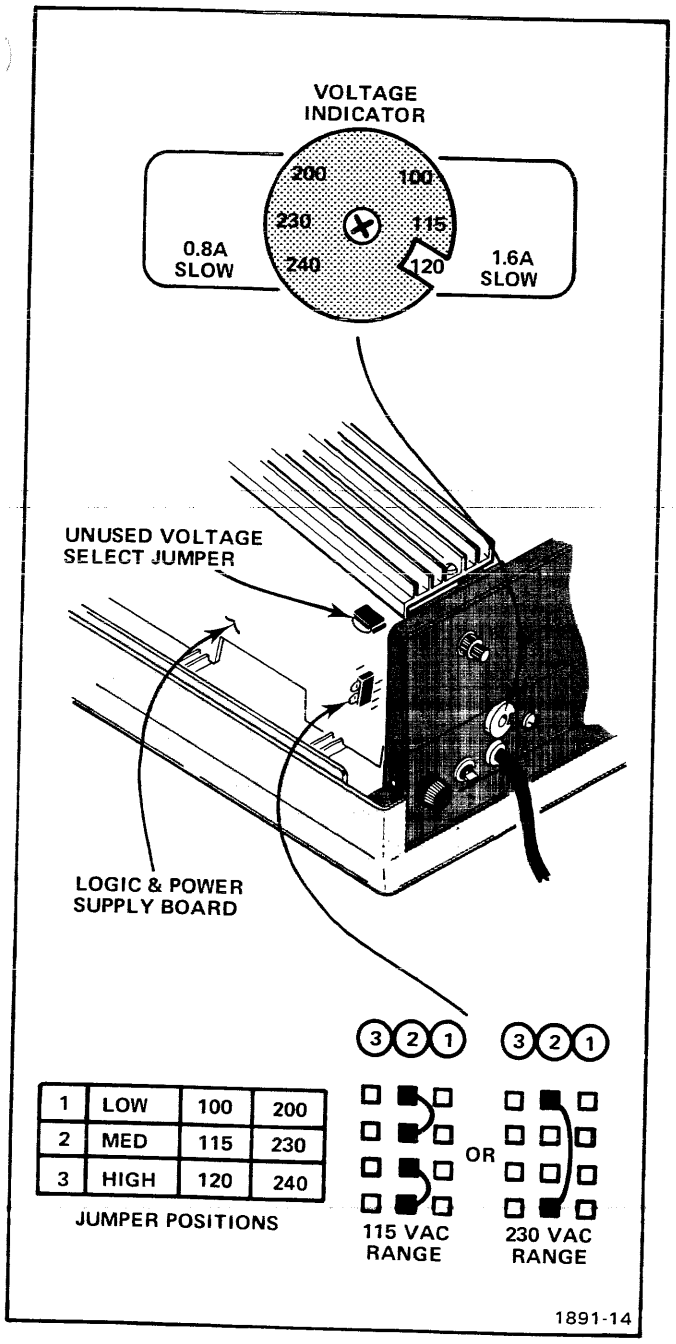


Fig. 2-2. Line Voltage Selection.

## Power Transformer Information

The power transformer (located in the bottom of the unit) can be wired for use with 115 V ac or 230 V ac nominal line voltage, and can be set for any of three ranges within the nominal setting. The nominal line voltage selection is accomplished by jumper selection (the 115 V jumper makes two connections; the 230 V jumper makes only one). Selection of the particular range within the nominal line voltage is accomplished by jumper position.

Basically, this consists of selecting from the high (120 or 240), medium (115 or 230), or low (100 or 200) ranges. (Refer to Fig. 2-2.) Note that the line fuse must also be changed when changing between 115 and 230 volt operation. A 1.6 A fuse is used for the 115 V ac range; a 0.8 A fuse is used for the 230 V ac range.

## Display Filter Removal, Cleaning, and Installation

**Removal.** Remove the crt mask after removing the top cover.

1. Place a small piece of tape on the surface of the filter, outside of the display area. This will be used as a reference during replacement. If a new filter is to be installed, it will be used for comparison.

2. Remove the four screws that attach the front casting, then remove the casting.

**CAUTION**

*When the front casting is removed, the crt is not supported. Handle the terminal carefully when the casting is removed.*

3. Lift the filter out of the neoprene mounting ring. It may be necessary to use a thin-blade device to aid in removal. Use caution to avoid scratching or breaking the filter.

**Cleaning.** Clean the face of the crt and the under-side of the filter, using a soft cloth and a mild soap and water solution. Note that the under-side can be distinguished from the outer surface by the masking tape if the original is being re-installed. If the old filter is being replaced with a new one, the under-side can be determined by comparing it with the old filter. Note that less glare from reflected light is apparent on the outer surface than on the under surface of the filter.

**Installation.** Put the filter in place in the recess in the neoprene mounting ring. The outer surface should be flush with the edge of the frame when properly installed. It may be necessary to use a non-abrasive device (such as a toothpick) to work the filter into place.

Install the front casting, and secure it with the four attaching screws.

Clean the outer surface of the filter, using a soft cloth and a mild soap and water solution.

## Crt and Deflection Yoke Removal and Installation

**WARNING**

*The crt may implode if it is scratched or struck severely. Do not handle the crt by its neck. Wear protective clothing and a face shield when handling the crt.*

**Crt Removal.** Refer to the illustration in the Mechanical Parts List as necessary during this procedure. Remove the top from the display unit cabinet.

1. Disconnect the plug from the rear of the neck by pulling gently and evenly. Disconnect the flood gun connector which is attached to the leads coming through an opening at the rear of the large crt shield.

2. Loosen (but do not remove) the nuts that secure the crt shield holder to the crt shield (Fig. 2-3).

*NOTE*

*Some instruments do not have the crt shield holder at the rear of the crt shield. If no shield holder is present, delete step 2.*

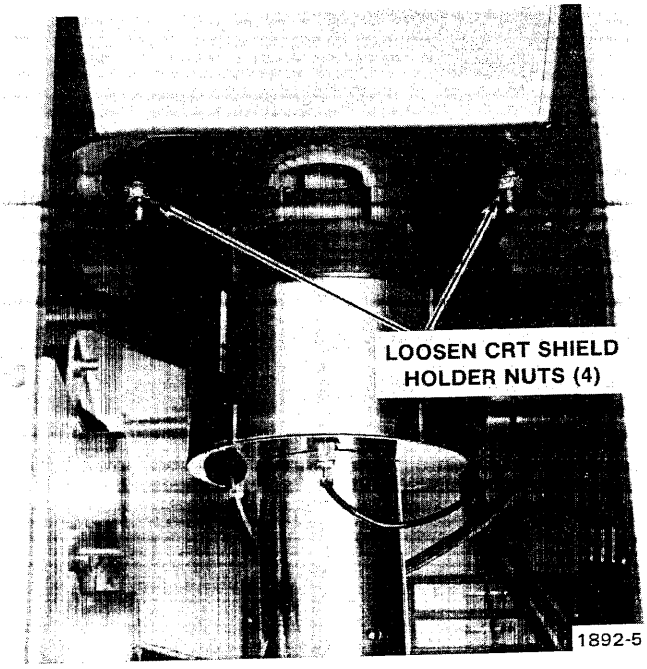


Fig. 2-3. Shield Holder.

3. Remove the four screws that attach the implosion shield frame to the terminal frame (Fig. 2-4). Remove the implosion shield frame and the implosion shield.

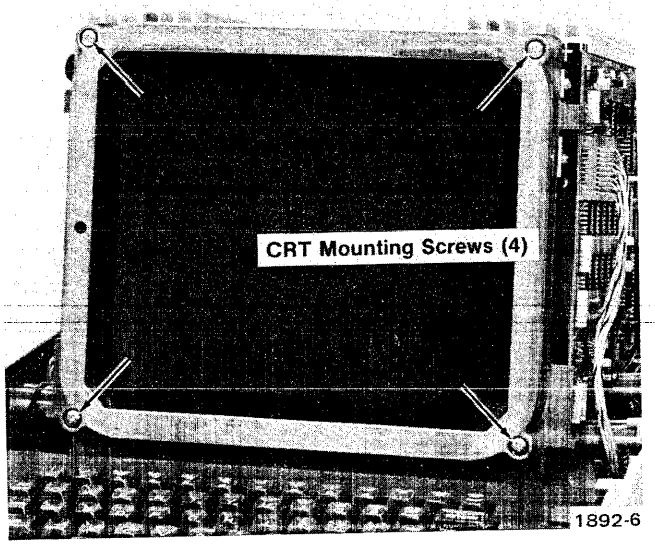


Fig. 2-4. Crt Mounting Screws.

4. Hold onto the neoprene mounting ring and slide the crt out of the front of the unit, avoiding side pressure which may break the neck of the crt. DO NOT HOLD THE CRT BY ITS NECK. Set the crt face-down on a flat surface. The neoprene mounting ring will keep the faceplate from contacting the surface. If the crt yoke is to be removed, continue with steps 5 and 6. If only the crt is being replaced, proceed to step 7.

5. To remove the yoke, first disconnect the ground lead. From the rear, push the shield through the shield holder; the yoke will come with it.

6. Place the new yoke into the shield, and insert it, from the front, back through the shield holder. Reconnect the ground lead.

7. Before installing the crt, make sure the yoke liner is installed in the yoke. Coat the inside of the yoke liner with a solution of soap and water to aid in reassembly.

8. To complete the crt installation, follow steps 4 through 1 in reverse order.

## PERFORMANCE CHECK

**General.** This procedure can be used undernormal operating conditions with all circuit cards installed. Since it uses the ECHO operation, no computer connection is required. Checks are referenced to a circuit to permit rapid evaluation of incorrect results. Steps requiring position measurement should be made without parallax. That is, the line of sight should be perpendicular to the viewing area; this can be achieved by closing one eye and checking that the reflection of the viewing eye is in line with the point being observed.

| Activity | Results | Circuit/Adjustment |
|---|---|---|
| Turn the terminal on | | Power Supply |
| Wait 30 seconds | Face of display becomes bright | Storage circuits |
| Press PAGE | Erase cycle occurs | Storage circuits |
| Wait 5 seconds | Alpha cursor appears in top-left of display, approximately 1.4 cm from left edge and 1.2 cm from top edge of display area. | High voltage and Z Axis circuits; Deflection circuits; Logic circuits |
| Wait about 90 seconds | Cursor disappears | View/Hold circuits |
| Press SHIFT | Cursor re-appears | View/Hold circuits |
| Enter the character 8 ten times. | The characters entered are written in line and remain stored on display | Keyboard; Deflection circuits; Character Generator; Storage circuits |
| Wait 5 minutes and press SHIFT (after approximately 1 1/2 minutes terminal enters Hold mode) | Check for fade-positive and drop-out effects (Fig. 2-5) | Storage circuits, crt |
| Enter LINE FEED | Cursor moves vertically to next line | Control logic |
| Enter 8s to complete a line (74 characters) | Cursor resets to next line and to margin at left of dipslay | Control logic |
| Press PAGE | Erase cycle occurs; cursor goes home | |
| Enter 34 LINE FEEDs | Cursor goes to bottom-left corner of display | |
| Enter 35th LINE FEED | Cursor moves to center margin position at top-center of display | Control logic |
| Enter thirty-seven 8's | 8's written and stored; cursor moves to next line and back to center margin. | Control logic |
| Enter 5 Space commands | Cursor moves 5 spaces to right | Control logic |
| Enter RETURN | Cursor moves to margin at center of display | Control logic |

| Activity | Results | Circuit/Adjustment |
|---|---|---|
| Enter PAGE | Display erases; Alpha cursor goes home | |
| Enter each written character indicated on keyboard | Check for proper writing and focus of selected character | Keyboard |
| Enter PAGE | Display erases; cursor goes home | |
| Enter CTRL SHIFT M (GS) | Cursor disappears | Control logic |
| Enter Space RUBOUT Space _ | No apparent effect | Control logic |
| Enter _ | Dot appears in lower-left corner | Control logic |
| Enter 7 RUBOUT 7 _ | 45° diagonal line appears, starting from bottom-left corner | |
| Check line straightness | All points on the line should be within 2% of length of mean straight line (Fig. 2-6) | |
| Press PAGE | Alpha cursor appears at top-left | Control logic |
| Enter CTRL G (BEL) | Rings bell | Control logic |
| Enter CTRL I (HT) | Cursor moves one space to right | |
| Enter CTRL J (LF) | Cursor moves down one line | Control logic |
| Enter CTRL SHIFT M (GS) | Selects Graph mode; cursor disappears | Control logic |
| Enter Space RUBOUT Space _ +RUBOUT Ø @ | Vector appears | Control logic |
| Enter CTRL SHIFT K CTRL W (ESC ETB) | Copy of display is made if Hard Copy Unit is attached and energized | Hard Copy TARSIG Amp; Hard Copy Selector; High Voltage and Z Axis circuit; Storage circuit |
| Enter CTRL SHIFT K CTRL L (ESC FF) | Display erases; Alpha cursor homes | Control logic |
| Enter CTRL SHIFT M (GS) | Cursor disappears | Control logic |
| Enter @ @ | Dot appears near display center | Control logic |
| Enter CTRL SHIFT 0 (US) | Alpha cursor appears with bottom-left corner at dot | Control logic |
| Enter CTRL SHIFT M (GS) | Cursor disappears | Control logic |
| Enter @ _ | A line is written near display center | Control logic |
| Enter CTRL M (CR) | Alpha cursor appears at left margin opposite the line | Control logic |
| Performance Check completed. | | |

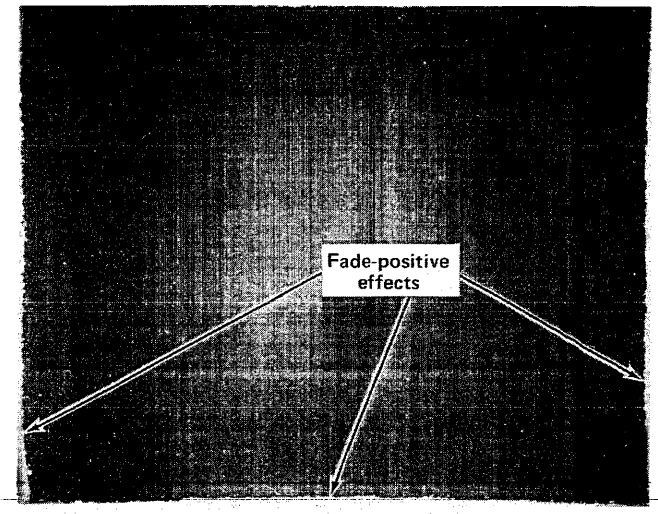


(A) Fade-Positive

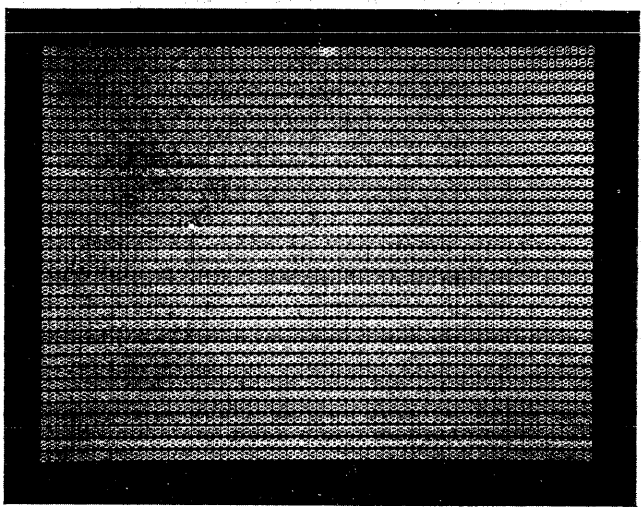

(B) Drop-Out

1892-7

**Fig. 2-5. Display Conditions. Fade Positive (a) and Drop-out (b) effects.**

# ADJUSTMENT

## Introduction

Adjustment of the terminal normally is required only when it ceases to properly perform its intended functions, or after circuit repairs have been made. However, if adjustment is to be performed on a routine schedule, an interval of one year between adjustments is recommended. Adjustment should be preceded by a through cleaning and inspection as outlined earlier. Adjustment should be performed in a +20° C to +30° C environment and should be preceded by a thirty minute warmup period.

Table 2-1 provides an index of adjustments in the order in which they occur in the Adjustment Procedure. This may also be copied and used as a record of adjustments.

## Equipment Required

The following equipment is required in this procedure:

*NOTE*

*The tolerances noted for the test equipment may, in some cases, be considerably tighter than that of the 4006-1. This is necessary to maintain the accuracy of the measurement.*

**Oscilloscope.** Dual trace with vertical deflection factors of 5 mV and 2 V per division, and sweep rates of 0.1 $\mu$s, 0.5 $\mu$s, 1 ms and 10 ms per division; frequency response should include dc to at least 10 MHz.

**Voltmeter.** Range at least −25 V dc to +400 V dc; accuracy within at least .05% at +15 V, 0.1% at −15 V, 0.2% at +5 V and at least 1% at all other voltages. High voltage range to −4000 V dc, accurate to within at least 0.5% at −3850 V dc.

**Tektronix 4631 Hard Copy Unit.** Required only for verification of Hard Copy mode.

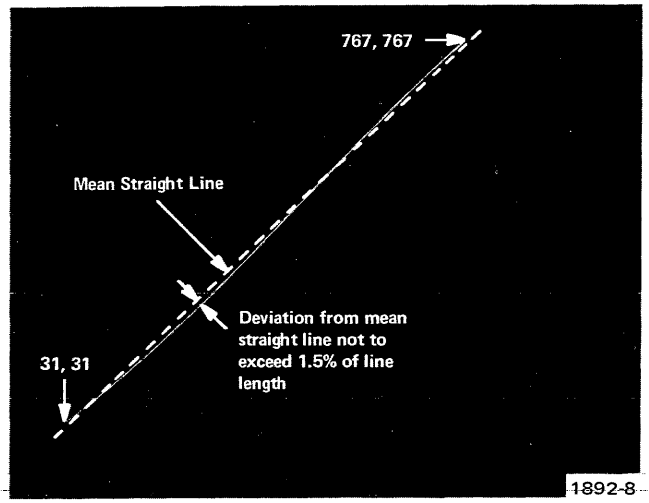


Fig. 2-6. Vector Dynamic Geometry Error.

## Adjustment Procedure

**Power Supply Calibration.** The only adjustment in the Low Voltage Power Supply adjusts the +15 Volt, which is a reference supply for the +5 V supply and the −12 V supply. The power supply should only be adjusted during a complete adjustment procedure.

To adjust the +15 Volt supply, connect the voltmeter probe to pin 3 of J36. Ground to the chassis, or to the power supply ground pin. Power Up, and adjust R66 for 15 V dc ±75 mV (+14.925 V to +15.075).

**Display Calibration.** To adjust the terminal display, use the following procedure.

**WARNING**

*For adjustments to the High Voltage circuitry, a plastic-bladed screwdriver should always be used to avoid shock hazard.*

1. Power down. Connect a high voltage probe to TP102, at the rear of the Display Board. Ground to the chassis or to the power supply ground pin. Power up, and adjust R224 for approximately −3850 V dc. Power down and remove the probe.

2. Place a voltage probe on pin 3 of J58. Power up and adjust R359 (CE) for a Collimation Electrode voltage of about 100 V (or as specified on the crt shield).

**TABLE 2-1**

**Index of Adjustments**

| Adjustment | Circuit Number | Location |
|---|---|---|
| +15 Volt Supply | R66 | Logic/Power Supply Fig. 2-7 |
| High Voltage | R224 | Display Board Fig. 2-8A&B |
| CE (Collimation Electrode) | R359 | " " " " Fig. 2-8A&B |
| Op Level | R248 | " " " " Fig. 2-8A&B |
| Bias | R129 | " " " " Fig. 2-8A&B |
| Cursor Brightness | R2 | Logic/Power Supply Fig. 2-7 |
| Focus | R13 | Display Board Fig. 2-8A&B |
| Dynamic Focus | R36 | " " " " Fig. 2-8A&B |
| X Position | R271 | " " " " Fig. 2-8A&B |
| X Gain | R270 | " " " " Fig. 2-8A&B |
| Y Position | R273 | " " " " Fig. 2-8A&B |
| Y Gain | R272 | " " " " Fig. 2-8A&B |
| X Geometry | R393 | " " " " Fig. 2-8A&B |
| Y Geometry | R392 | " " " " Fig. 2-8A&B |
| X HC Position | R687 | " " " " Fig. 2-8A&B |
| X HC Gain | R686 | " " " " Fig. 2-8A&B |
| Y HC Position | R695 | " " " " Fig. 2-8A&B |
| Y HC Gain | R691 | " " " " Fig. 2-8A&B |
| HCU Intensity | R1050 | Back Panel Fig. 2-9 |
| Threshold | R252 | Display Board Fig. 2-8A&B |

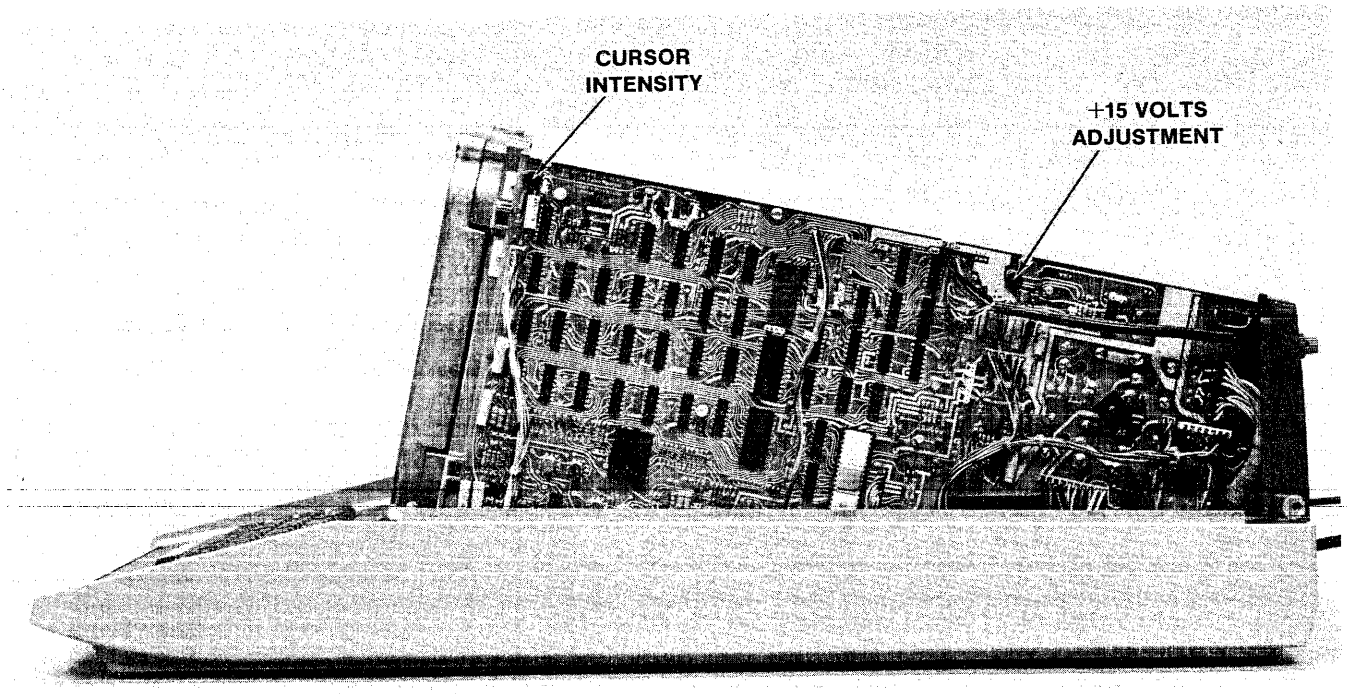


**Fig. 2-7. Logic Board Adjustments.**

3. Page and enter a GS (Ctrl Shift M). Adjust R129 (BIAS LEVEL) unitl a dot is seen in the upper left of the display. Back off R129 just enough that the dot no longer occurs.

4. Adjust R2 (CURSOR BRIGHTNESS) on the Logic board to achieve optimum cursor brightness without causing the cursor to store. To check for storage, press the SPACE bar repeatedly while adjusting intensity.

5. Connect a jumper between pins 6 and 10 of U255. Push the "8" key on the keyboard (once if the Half-Duplex option is installed; push and hold if no Half-Duplex is installed.), and note that the screen begins to fill with 8s. Check the focus and adjust R13 (FOCUS) at the rear of the Display board, as the lines are printing, until optimum focus is achieved. You may wish to press the PAGE key occasionally to clear the screen and re-check focus. Press RUBOUT or ALT MODE to stop.

6. Press PAGE, and repeat the previous step, this time adjusting R36 (DYNAMIC FOCUS). This adjustment affects the difference in focus between the center of the screen and the screen corners. Adjust for approximately even focus at the corners and screen center. Remove the jumper from U255.

7. Before adjusting deflection move the ORIGIN SHIFT strap (just above J56) to the CAL position, then enter the following Graph commands. If local storage is available (such as 4923 Option 1 Digital Cartridge Tape Recorder, a 4921/4922 Flexible Disc Memory, or even local minicomputer), you may wish to temporarily store this data so that it may be conveniently recalled. Enter:

CTRL SHIFT M (GS)

SPACE RUBOUT SPACE @

7 @

RUBOUT ? _

SPACE _

RUBOUT SPACE @

7 RUBOUT ? _

CTRL SHIFT M (GS)

SPACE _

7 RUBOUT SPACE @

You should see a rectangle bisected by two intersecting diagonal lines from corner to corner.

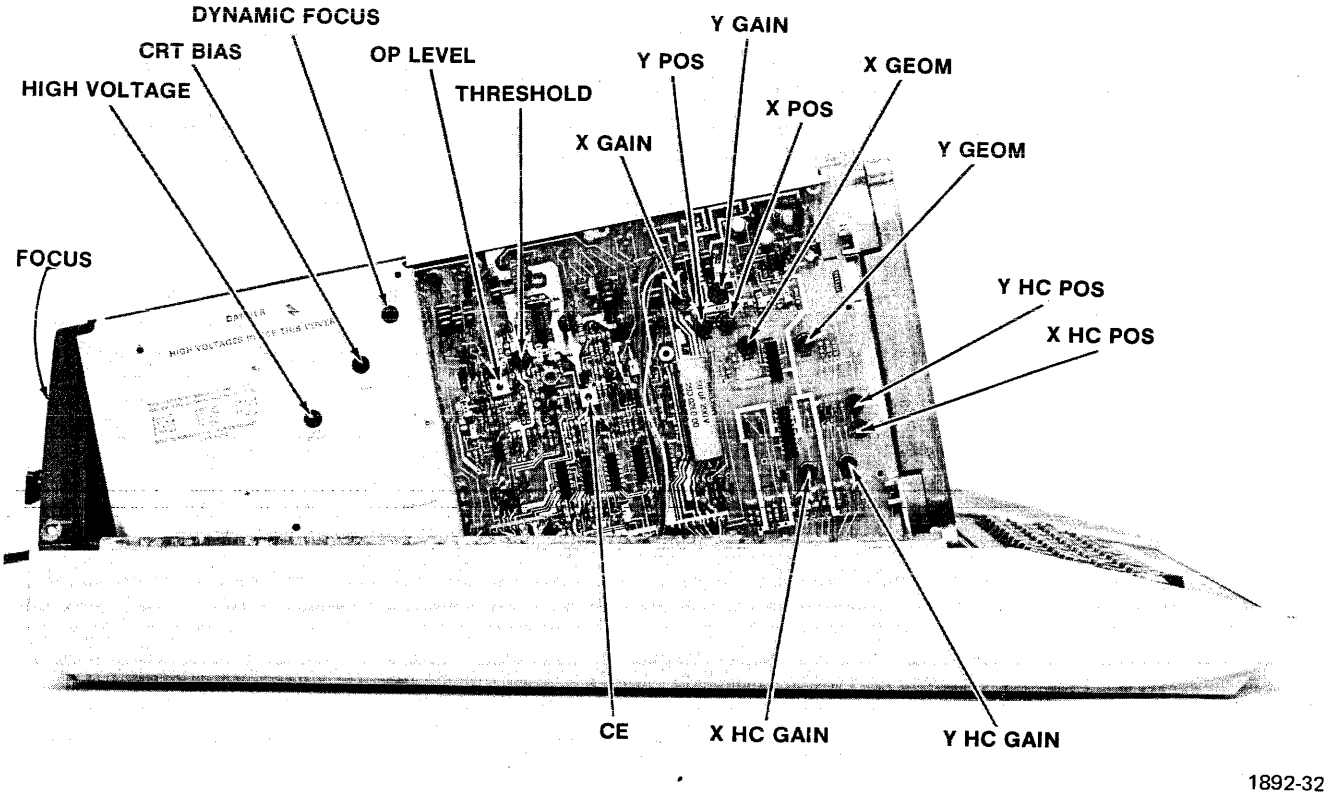


Fig. 2.8A. Display Board Adjustments.

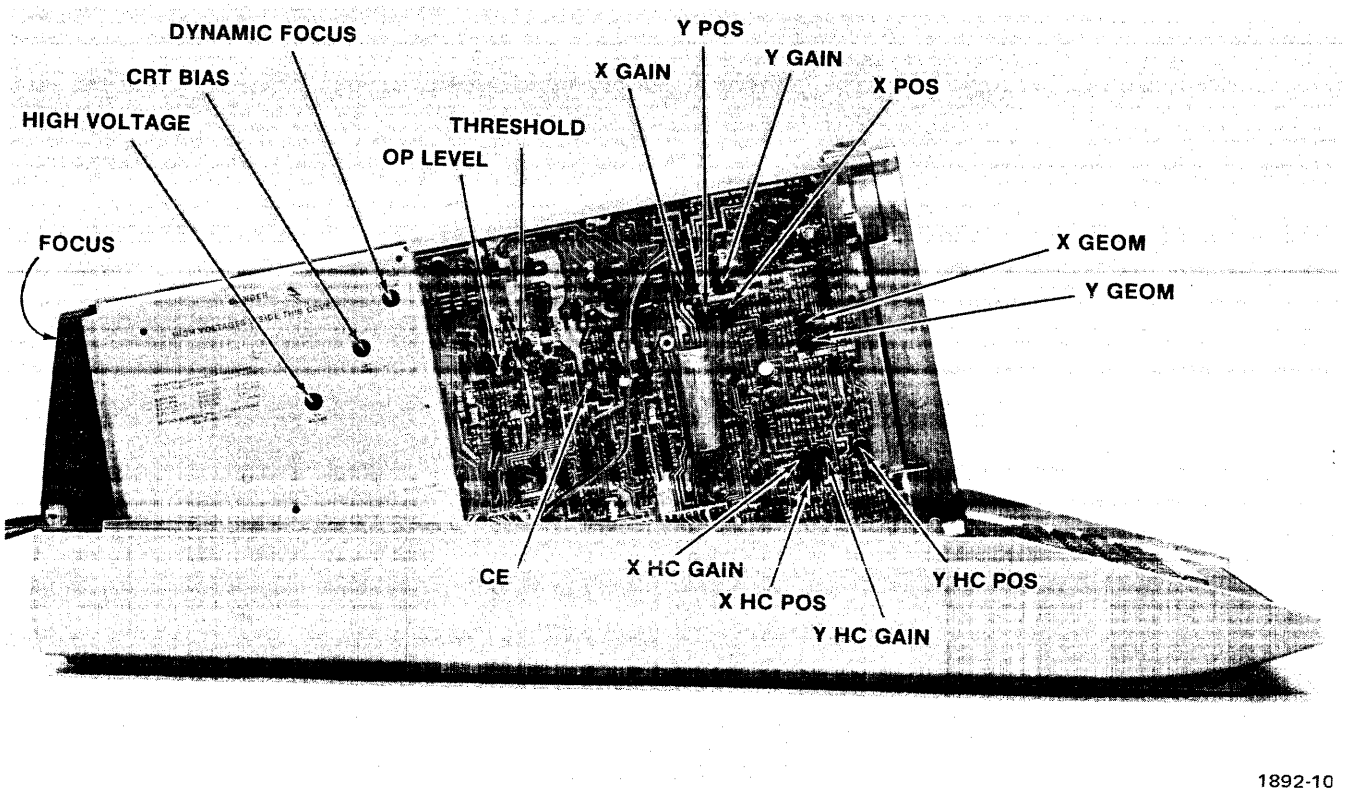


Fig. 2.8B. Display Board Adjustments.

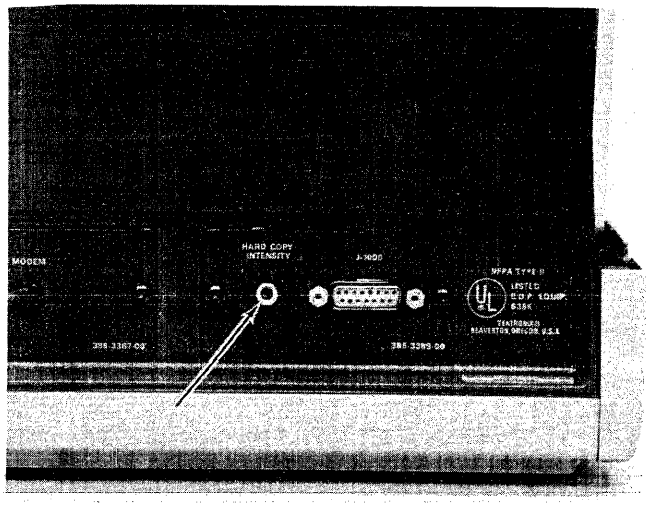


1892-11

**Fig. 2-9. HCU Intensity Adjustment.**

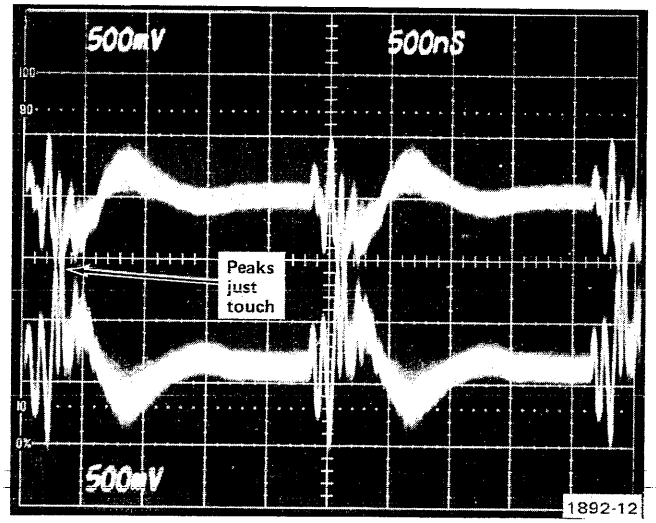


**Fig. 2-10. Threshold Adjustment.**

8. If the display pattern is tilted, the yoke must be rotated. This is accomplished by grasping the shield behind the shield holder, and rotating it.

Press PAGE, then re-enter the test pattern from step 88. Repeat until the displayed pattern is straight on the screen. Fasten the securing nuts, being careful not to disturb the yoke position in doing so.

9. Using the same test pattern (step 8), adjust X POSITION, X GAIN, Y POSITION and Y GAIN (R271, R270, R273, R272 respectively) to obtain the maximum dimensions of 7.25 inches horizontal (≈18.5 cm) by 5.375 inches vertical (≈13.7 cm). Adjust to bring the display center within 0.25 inch (0.635 cm) of the display center, and note that position and gain are interactive.

10. Adjust R393 (X GEOMETRY) and R392 (Y GEOMETRY) to straighten the test pattern vectors. Readjustment of position and gain may be required.

11. Connect the 4610 or 4631 Hard Copy Unit to the terminal, and press the COPY key. Adjust the X HARD COPY RAMP POSITION (XHCP, R687) and X HARD COPY RAMP GAIN (XHCG, R686) to overlap the test pattern by .5 cm on the left and right sides, as shown on the graticule.

Adjust the Y HARD COPY POSITION (R695) and Y HARD COPY GAIN (R691) to achieve the same overlap in the vertical direction.

12. Make another copy, and this time adjust the scanning line intensity to a point just below storage. Adjust R1050 (Hard Copy INTENSITY) on the terminal back panel, adjacent to the Hard Copy Unit jack (J1000).

13. Connect the scope probes to TP255 and TP257. Set Vert Defl. to 0.5 V/cm non-inverted. Set sweep to 0.5 μs/cm. Set both inputs to ground, and position both traces to the second horizontal graticule line from the bottom. Switch both inputs to dc.

Connect external trigger probe to the Z-axis signal, on TP 339. Press PAGE, then COPY and check for a display resembling Fig. 2-10. Adjust R252 (THRESHOLD) until the peaks almost touch, but no overlapping occurs.

Final adjustment of the threshold should be made after inspection of the copy for noise, appearing as black specks.

14. Power down, and replace the ORIGIN SHIFT strap to the GND (or NORM) position. Replace the cover; calibration is complete.

## Running Time Meter

Some units may have a running time meter installed in the bottom of the unit. The running time meter assembly does not change the cost or functional operation of the 4006-1.

# Section 3

# CIRCUIT DESCRIPTION

### Introduction

This section provides a description of 4006-1 concepts and circuit operations. Provided here are a discussion of basic terminal operating concepts, block diagrams, a listing of which circuitry blocks are located on each circuit board, and a functional description of each circuit block. The functional descriptions will also refer to the schematic diagram sheet on which the circuit block is found. Also in this section is a Dictionary of Line Titles, describing the various signals in the 4006-1. It is suggested that you read the Dictionary of Line Titles prior to reading further in the circuit descriptions. In doing so, you will become acquainted with terms used later in this section.

## DICTIONARY OF LINE TITLES

The following is a description of interconnecting signals and an explanation of their purpose and operation. On the schematic diagrams, each signal is followed by a one or a zero (for example, HIY-0). The one represents a high-active signal; the zero (as in the example) is a low-active signal.

| | |
|---|---|
| BIT 1-BIT 8 | Data to and from the Terminal/computer. |
| TSTRB | Strobes data into the Terminal to be displayed on the screen, etc. 1.6 microsecond pulse synchronized to the 614 kHz clock. |
| LCE | Indicates last character sent to Terminal was the ESC (Escape) control character. |
| Z | Z axis information (beam intensity). |
| DOWN<br>RIGHT | Counting pulses for X and Y registers. |
| EOL | Indicates that the X Register is counting past the right margin (end of line). Used by the Automatic Carriage Return/Line Feed logic. When in the Alpha Mode, EOL going active causes an Automatic Carriage Return (CR)/Line Feed (LF) function. |
| HIY<br>LOY<br>HIX<br>LOXE | Used to load data into the Y or X data latches and (LOXE) to draw vectors. |
| GRAPH | Asserting a low on GRAPH will set Graph mode. |
| DRBUSY | If not during an erase cycle:<br>Asserted by the Hard Copy Unit to set up the display for hard copy readout.<br>DRBUSY should be asserted before the trailing edge of MAKE COPY in order to hold the Terminal in BUSY during the scan.<br>If during an ERASE cycle:<br>Asserted by the display for the duration of the erase cycle, during which information may not be written on the screen. |
| HCU | A low indicates that the Hard Copy Unit is capable of accepting a MAKE COPY request. |
| PAGE | Set active when the FF Control Character is preceded by ESC; also Page key. Causes the display to erase the screen. 1.6 microseconds wide minimum. |

| | |
|---|---|
| CR | Causes the X register to set back to the left margin or center margin of the display. |
| BREAK | Signal from the keyboard to the interface for computer signaling. |
| XMAT<br>YMAT | Analog signals representing the writing beam location within the character matrix. These are currents and may be difficult to measure. |
| X<br>Y | Analog signals to display. −7.75 to +7.75 volts covers the screen. Positive signals correspond to left or up deflection. 0 volts represents the physical center of the screen. |
| 1.2 MHz<br>1.2 kHz<br>38 kHz<br>77 kHz | Clock signals. |
| VIEW | Controls the flood guns in the crt display. A high turns the guns on. View is in a steady high condition for about 90 seconds after the last information is received. After about 90 seconds, the display is placed in "hold mode" by the application of a 1200 Hz signal with a 12.5% duty factor on VIEW. |
| HOLD | When the display is in VIEW mode (normal viewing status), HOLD is high. When the display goes to "hold mode" (about 90 seconds after the receipt of the last data), HOLD goes low. |
| ALPHA | ALPHA is low when the Terminal is in Alpha mode, and high when in Graph mode. |
| ALPHA STB | This signal strobes the character generator to produce each character, in Alpha mode. |
| GS | Set by the GS control character to place the Terminal in Graph mode. |
| LF | Line Feed. In Alpha mode, causes Y to move down one line (counts down by 22). If Y underflows (indicating the bottom of the display) margin is complemented and Y counts down to 767. |
| ERASE | Results from PAGE key or ESC FF. Causes the screen to erase (Page), resets to Alpha mode and resets the X and Y position counters. |
| COPY | This command causes the Hard Copy Unit to initiate a Hard Copy operation. |
| CIP | Character in Progress, inhibits other activity until the character is completed. |
| SHIFT | Causes generation of the shifted character (i.e. % rather than 5). Resets to View mode. |
| Y MOVE<br>X MOVE | Signals used to determine whether or not the anti-burn circuit will activate during a vector. |

# BASIC CONCEPTS OF COMPUTER/TERMINAL COMMUNICATIONS

## General

The 4006-1 Computer Display Terminal is a device that permits a person to deal directly with a computer. By using the Keyboard, which is similar to a typewriter keyboard, a person can question or instruct the computer and the computer's response is returned to that person by way of the display screen, either alphanumerically or graphically (charts, graphs, pictures, etc.).

The Terminal/Computer Communications block diagram is shown in Fig. 3-1. The different sections are the Computer, the Terminal (which includes the Keyboard, the Display Unit, and the Terminal Control circuitry) and the Communication Link.

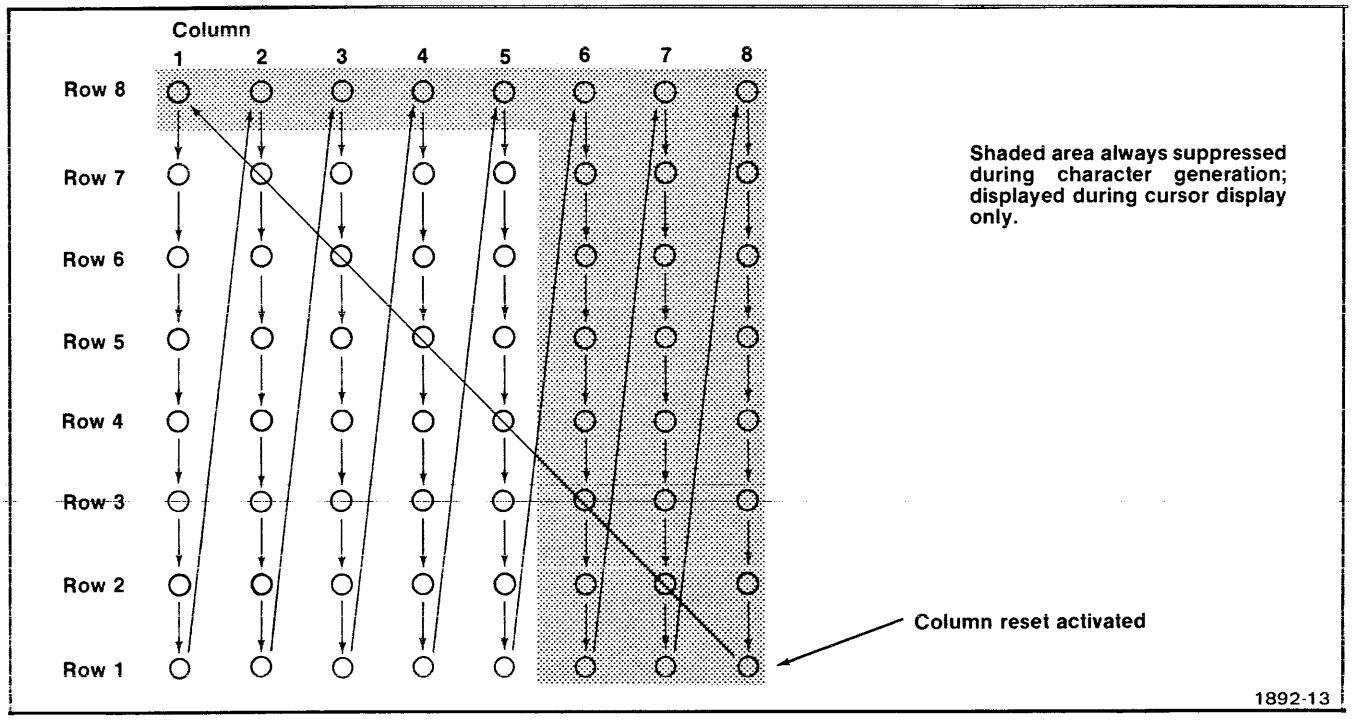


**Fig. 3-1. Character Generator Matrix.**

## Computer

The Computer can speak and act only through the use of binary numbers. The job of the Computer then, is to accept the data from the Terminal (commands from the Keyboard or other input devices), act on it by performing the indicated instruction and return its response to the Terminal.

## Terminal

The Terminal acts as a translator between the operator and a computer. Its job is to take the data from the computer and translate it into a language or graphic form that makes the data understandable to the operator. This is the function of the 4006-1 Computer Terminal.

**Display Unit.** The Display Unit presents data visually for both alphanumeric and graphic operation by accepting X and Y (writing beam position) and Z (writing beam on or off) signals from the Terminal Control circuitry. These signals combine in the Display Unit to give a visual representation on the display screen of the data interchange between the operator and the Computer.

The 4006-1 Display Unit contains a storage-type crt (cathode-ray tube). The data being displayed has only to be written once. The characteristics of the storage tube allow the image of the data to be retained for a long period of time (up to one hour without damage to the display screen) without having to continually redraw it, as would be necessary if a television-type crt were used.

**Keyboard.** The Keyboard provides the operator with a readily understandable means of inputting data to the Computer. It is an electromechanical device which, as a result of the operator's depressing any one of its keys, produces a binary data word that is distinctive for that key. This binary representation of the key depressed provides the Terminal Control Logic and the Computer circuits with a form of data they can understand.

**Terminal Control Logic.** This circuitry accepts data from either the Computer or the Keyboard. This circuitry also provides synchronization so that the data is handled in the proper sequence. When data is accepted by the Terminal Control Logic circuits, it routes this data to the Computer and/or the Terminal Display Unit, depending upon the data source and the function requested by the data. The Terminal Control Logic circuits interpret this data as either an alphabetic character or number, as coordinate points on an X-Y axis (for beam positioning), as a special function to be performed (ring bell, etc.) or as mode control information.

## Communication Link

**Direct.** When the Computer is located near the Terminal (as in the same building), a direct hook-up is the most practical. This type of communication link can best

be thought of as simply plugging the Terminal into the Computer, just as you would plug a radio into a wall socket.

**Modem (telephone hook-up).** In most cases the computer will be located a considerable distance from the Terminal, making a direct connection impractical. In such cases, the transfer of information between the Computer and Terminal must be by other means. The most convenient and readily available means of transmission is the standard telephone and telephone lines. However, the Terminal and Computer cannot be hooked directly to the telephone because telephone lines cannot transmit DC levels; therefore, the telephone hook-up consists of a modulator-demodulator (MODEM) which enables (modulates) the data on a voice frequency tone for transmission over the lines and decodes (demodulates) the data at the receiving end. Both the computer end and the Terminal end of the telephone line have MODEMS. Both ends operate the same. Thus, by the use of telephone lines and the MODEM, the distant computer can be reached as easily as dialing your next door neighbor.

## CIRCUIT BLOCK LISTING

This section lists the blocks of circuitry found on each circuit board within the 4006-1. Since each circuit board (with the exception of the Keyboard) is divided into several schematics, the blocks are listed with reference to the schematic on which they are found. The list is presented in the order in which the schematics are found, and in which the descriptions of the functional operation of the circuit blocks occur later in this section.

### Power Supply/Logic Board

The Power Supply/Logic board contains the following functional blocks.

| | |
|---|---|
| 1-1 Transmit/Receive and Clock Generation | Transmit<br>Receive<br>Master Clock Generation |
| 1-2 Control Logic | Control Character Decoder<br>LCE<br>Alpha/Graph Flip-Flop<br>X — Y Register Control<br>Graph Byte Control<br>BEL/ETB Decode<br>Copy Command Decode<br>Bel (Speaker) Driver<br>View/Hold Control |
| 1-3 X & Y Axis | X Register<br>Y Register<br>X Deflection Counter<br>Y Deflection Counter<br>EOL Decoder<br>X D to A Converter<br>Y D to A Converter<br>X Amplifier<br>Y Amplifier |
| 1-4 Z Axis | Character Generator<br>Character-in Progress<br>Cursor Control<br>Graph Mode Z Enable<br>Anti-Burn Control |
| 1-5 Low Voltage Power Supply | +15 Volts<br>+5 Volts<br>−12 Volts<br>−20 Volts (unregulated)<br>+20 Volts (unregulated)<br>+185 Volts (unregulated)<br>+320 Volts (unregulated) |

### Display Board

The Display board contains the following functional blocks.

| | |
|---|---|
| 2-1 Deflection Multiplexer | HCU Control<br>Switch Driver<br>X Amp and Switch<br>Y Amp and Switch<br>Origin Shifter<br>Make Copy Amp |
| 2-2 Crt Readout, Storage, and +175 Volts Regulator | +175 Supply<br>Erase Pulse Generator<br>Flood Gun Control<br>Erase and Storage Backplate Control<br>Collimation Control<br>CRT Readout Amp |
| 2-3 Deflection Amps | \|X\| Amp<br>\|Y\| Amp<br>$X^2$ Amp<br>$Y^2$ Amp<br>$X^2 + Y^2$ Amp<br>X Geometry Correction<br>Y Geometry Correction<br>X Deflection Amp<br>Y Deflection Amp |

| | |
|---|---|
| 2-4 High Voltage and Z Axis | High Voltage Supply<br>Control Grid Supply<br>Intensity Control<br>Focus Supply<br>Filament Supply<br>Z Signal Amplifier<br>Regulator Oscillator |
| 3-1 Keyboard | Oscillator<br>4 LSB Counter<br>Strobe Generator<br>Character Decoder<br>Character Keys<br>Character Detector<br>3 MSB Counter<br>Bit 7 Control and Control Key<br>Bit 5 Control and Shift Key<br>Character Output Gates |

## CIRCUIT DESCRIPTIONS

This section provides a description of the function of each circuit block. For ease of reference, the block descriptions occur in the same order as they appear in the Circuit Block listing and in the Schematic Diagrams.

## POWER SUPPLY/LOGIC BOARD

### Transmit/Receive and Clock Generation (1-1)

The following blocks are found on schematic 1-1, pertaining to data transmission and receipt, and the generation of clock signals within the 4006-1.

**Transmit.** The Transmit block oversees all data transmission from the 4006-1 to the modem and/or computer. Its operation is centered around U455B, which is the transmitter half of a Universal Asynchronous Receiver/transmitter (UAR/T). Strap options external to the UAR/T allow for selection of parity generation or no parity generation, odd or even parity (when parity is selected), or high or low bit 8 when bit 8 is used for "data". All of these features are internal to the UAR/T. Pin 40 of the UAR/T is the transmit clock. For operations internal to the UAR/T, this clock must run at sixteen times the desired transmission rate.

U355A and U255B combine to form a strobe generator for the data strobe input to the UAR/T (U455B, pin 23).

The Transmit block also contains the ECHO IN/OUT strap. Note that when ECHO is strapped IN, the Serial Data Output (pin 25) of U455B is connected to the Serial Input of U455A, which is the Receiver half of the UAR/T.

Q460 and Q462, with associated resistors and supplies, combine to form an output level shifter to convert from the TTL levels present within the 4006-1 to the levels defined by EIA Standard RS-232-C. These levels are defined as being more negative than −3 volts for a mark (binary one), and more positive than +3 volts for a space (binary zero), the outer limit of voltage is further defined as not exceeding 25 volts; the voltage will not exceed −12 or +15 volts, respectively, in the 4006-1.

**Receive.** The Receive block centers around U455A, which is the Receiver half of the UAR/T. It receives data in its Serial Input (pin 20), either through the ECHO IN path or from the RCV DATA (J32-7) through Q260. Q260 serves both as a level shifter, converting back from RS-232-C levels to TTL levels, and also as an inverter. Note that the UAR/T has internal pull-up resistors.

U345 suppresses printing or spacing when any character is received with bits 3, 4, 5, 6 and 7 all high; these are RUBOUT (DEL), ~ , } , and |. U255A is used to create the pulse (CDAV) that is gated to become TSTRB. CDAV is also used (on schematic 1-2) to reset the LCE flip-flop.

### Control Logic (1-2)

The following blocks are located on schematic 1-2. Refer to the Schematic Diagrams section for circuit details.

**Control Character Decoder.** The Control Character Decoder consists of U341, which is a 4-line to 16-line decoder. The inputs consists of bits 1, 2, 3 and 5. Bit 4 is inverted to produce a low (when bit 4 is true) on the pin 19 enable input ($G_1$). The other enabling input is pin 18 ($G_2$), which is clocked when bits 6 and 7 and TSTRB are low. One of the outputs goes low for each of the decoded Control Characters to which the Terminal responds. These are LF, CR, GS, HT, US, ESC and FF, as labeled on the schematic.

**LCE.** The LCE block consists of U355, a flip-flop which is cleared each time an Escape (ESC) Control Character is decoded. This causes a high on the pin 8 (LCE) output, signifying that the last character received was an Escape character. This is used when particular Control Characters must be preceded by ESC to initiate a function. These are ESC FF (page, or erase the screen) and ESC ETB (which initiates production of a Hard Copy). The LCE flip-flop is reset by CDAV after the second character is received.

**Alpha/Graph Flip-Flop.** The Alpha/Graph Flip-Flop determines whether the Terminal is in Alpha mode or Graph mode. A GS (low) from the Control Character Decoder places a high on the Alpha line, which is low-true, and a low on the Graph line, thus enabling Graph mode. The flip-flop is reset to the opposite (Alpha mode) configuration by any of the inputs to U231B. These are CR or US (U331C), or either of the screen erasure conditions (U331D).

**X and Y Register Control.** The X and Y Register Control block is used primarily to generate pulses for control of the writing location, when in Alpha mode. (Note that when Graph is true, U215A is disabled.) It generates either 14 pulses (character space) or 22 pulses (Line Feed). U225D and U221D, with the flip-flop formed by U225B and C, form a multiplexer. When CIP goes low, or when an HT is decoded, U221A enables counting through the RIGHT gate (U221D), causing the alpha cursor to move one space (14 counts) to the right. EOL or LF, on the other hand, enable combining through the DOWN gate (U225D), causing the alpha cursor to move down one line (22 counts).

Any of the above conditions (that determine either a RIGHT or DOWN count) also clear U211A and B, U215A, and also load a preset count into U311. U211A and U211B are both dividing by two. The output of U211A provides the counting pulses, and is counting at twice the rate that U311 is clocked. For a DOWN count (22 pulses), a count of 13 is loaded into U311, allowing it to count 11 times before turning off U215A and disabling the count. (Recall that its count is half of the output pulse count; its 11 counts equals 22 output pulses.) For a RIGHT count, U311 is preset with a one, counting 7 times (14 output pulses from U211A) until it is disabled.

**Graph Byte Control.** The Graph Byte control block consists of U235 and associated gates. U235 is functioning as a 3-line to 8-line decoder. Its inputs are bits 6 and 7 and Graph, gated in by TSTRB (pins 2, 14). When bits 6 and 7 are both low, a Control Character is indicated. A low is produced on pins 7 or 9 (open collector outputs, tied together), to enable the Control Character Decoder.

If Graph is high, a low will be produced on pin 4, 5, or 6, which becomes an Alpha Strobe. If Graph is low, a low will be produced on pin 10, 11, or 12. Pin 11 produces LOXE, while pin 12 produces LOY. Pin 10 goes low for both HIX and HIY; the multiplexer consisting of U231C; U225A, U335A and U201C determines whether the byte is HIX or HIY, depending on whether a GS or LOXE or a LOY has been previously decoded.

**BEL/ETB Decoder.** U351A samples bits 1-4 and the Control Character indicator (U351A, pin 2) to detect both BEL and ETB Control Characters.

**Copy Command Decode.** If U351A has decoded the BEL/ETB characters, a high is placed on pins 8 and 9. If LCE is also high, and if bit 5 is high (U351B, pin 12), a copy command is decoded. This command is processed through a pulse stretcher (on the Display board, schematic 2-1), prior to output to the Hard Copy Unit.

**BEL (Speaker) Driver.** If U351A has decoded the BEL/ETB characters, a high is present on pin 10 of U161B. If bit 5 is low (U161B, pin 9), 75 ms one-shot U161 B fires, gating the 1.2 kHz clock through driver Q20 to speaker LS 1001.

**View/Hold Control.** The View/Hold Control consists of 80 second one-shot U161A. It is re-triggered by TSTRB with each character received. If no character is received for about 80 seconds, the one-shot times out, placing a low on HOLD (pin 13), and gating the 12.5% duty factor VIEW CLOCK through U131D to place the display in Hold mode. The one-shot can be triggered again to place the display in View mode by any character (TSTRB), or by the SHIFT key or DRBUSY.

## X and Y Axis (1-3)

The following blocks are located on schematic 1-3. Refer to the Schematic Diagrams section for circuit details.

**X and Y Registers.** The Y Register consists of U441; the X Register consists of U401 and U301B. These registers are used in Graph mode to provide storage for three of the four five-bit coordinate address bytes. In Graph mode, data is sent from the computer to draw graphics on the display screen. It takes twenty bits of data to establish a new coordinate address. However, only seven bits of data can be received from the computer at any one time; therefore, each coordinate address is divided into four seven-bit bytes. Two of the bits in each byte are used to develop load signals (HIY, LOY, HIX and LOXE), which are decoded in the Graph Byte Control block (Schematic 1-2). Each load signal latches its respective five bits of coordinate data into the appropriate register. The High Order Y

bits are the first sent from the computer. The HIY signal (decoded from the two most significant code bits) loads the remaining five bits into the five Most Significant Bit (MSB) portion of the Y Register. The same operation takes place for the Low Order Y bits and the High Order X bits. When the fourth and final byte (Low Order X) is received from the computer, LOXE parallel loads all 20 bits into the X and Y Deflection Counters. Note that the Low Order X bits are presented directly to the Low Order X inputs of the X Deflection Counter. No storage is needed because they are the last bits received to complete the coordinate address.

**X Deflection Counter.** The X Deflection Counter is a ten-bit counter/latch. It is loaded either serially by the RIGHT signal or it is loaded in parallel by the ten parallel inputs that contain the X coordinate address in Graph and Mode operation. In Alpha, the Register is loaded serially. Each low-going RIGHT signal will decrement the output one count. The ten outputs provide a count from 0 to 1023. Each count represents one Tekpoint, which simply means that the display beam can be positioned to any one of 1024 separate locations in the X Axis.

Either the CR (Carriage Return) or ERASE signal will reset the X Register to zero. ERASE goes active when the Page key is pressed or Control characters ESC plus FF are received by the Terminal.

**Y Deflection Counter and Top-of-Page Detect.** Like the X Deflection Counter, the Y Deflection Counter is loaded either in series (by DOWN) or in parallel when receiving ten bits of data from the Y Register. This register is also capable of outputting a count of 0 to 1023. In the X Register, all 1024 of the separate Tekpoints are viewable. In the Y Axis only 780 of the 1024 Tekpoints are viewable. When an ERASE signal zeros the Y Register the Alpha Cursor positions off the top of the screen in the Y Axis. Therefore, circuitry is needed to bring the alpha cursor in view, to the Home position (upper left). This is accomplished by the Top-of-Page Detect Circuit.

When the Y Register is zeroed by ERASE, the outputs position the display beam off-screen at a count of 1023. The two most significant bits are sensed by the Top-of-Page Detect Circuit (U325C). When both go high, the Top-of-Page Detect circuit places the 1.2 MHz clock on the DOWN line, and immediately the display beam begins moving in the down direction. When the count from the Y Register has incremented 256 counts, the 2nd MSB goes low, inhibiting the Top-of-Page Detector circuit and removing the signal from the DOWN line. Thus, the count is stopped at 767 (1023 minus 256 = 767). Note that the count is a binary up count, but relates to downward beam positioning.

**EOL Decode.** The EOL Decode block uses an 11th bit of the X Deflection Counter (U425 pin 2), which constitutes a count of 1024. It goes high when the X Deflection Counter reaches the edge of the page (1023). The EOL Decode block uses this signal to enable the Auto CR circuit when a count of 1023 (left margin) or 511 (10th bit, for center margin) is reached. The margin circuit looks at the 11th bit of the Y Deflection counter and forces the 10th X bit high after the bottom of the page is reached.

**X and Y Digital to Analog (D/A) Circuits.** These circuits convert the digital outputs of the Deflection Counters into their respective analog values. Both consists of a diode and resistor switching network. Depending upon the logic state of the Deflection Counters, the diodes turn on or off their associated resistor, allowing current to flow into the current rail. From there, the current flows into the inverting input of Op Amp U715A (Y Axis) or U605A (X Axis). Notice also, that the X and Y Matrix signals (X MAT, Y MAT) from the Character Generator (on schematic 1-4) are summed in their respective D/A circuit.

**X and Y Amplifiers.** The outputs of the X and Y D/A Analog circuits are input to their respective filter. When operating in the Alpha mode, the X and Y analog voltages pass directly through the circuit; U715B and U605B are effectively out of the circuit.

The Filter circuits (U705B and U715B) are switched in by Q704, Q706 and Q708 when in Graph mode.

When LOXE simultaneously loads the 20 bits of data into the X and Y Registers, it causes an almost instantaneous change in voltage to occur at the outputs of the X and Y Digital to Analog circuits. This sudden change in voltage cannot be sent directly to the Display Amplifiers because the rate of change is non-linear. In other words, the vector drawn might be very fast at the start and very slow at the end; thus, hardly storing at the beginning and storing very bright at the end, or maybe even overshooting the defined end point. The filter network overcomes these problems. It provides a linear rate of change in the X and Y output voltage to feed the Display circuit.

## Z Axis (1-4)

The following blocks are located on schematic 1-4. Refer to the Schematic Diagrams section for circuit details.

**Character Generator General Description.** The Character Generator performs its function by cycling through a dot matrix. See Fig. 3-1. Although the matrix is formed by the coordinates of eight rows and columns, the

eighth (or upper) row is always blanked during character writing.

Characters are formed by cycling through each of the matrix positions and writing a dot in each of the positions required for forming a character. A cycling sequence consists of selecting column one, rippling through rows 8 through 1, then selecting column 2, repeating the row selection, etc. For example, if the letter L were to be written, dots would be written for row positions seven through one in column 1. Only the row 1 dots would be written when the character generators cycles through the eight rows of the remaining four columns. The last three columns are blanked during character writing.

In the absence of a character input, the Character Generator continuously cycles through the matrix, pulsing all dots in rows 8 through 1, forming a non-storing cursor. When a character is ordered written, the matrix is scanned, dots are written to store the character, and then a pulse is sent to advance the X Register one character position to prepare for the next character.

The principal circuits which perform these functions within the Character Generator are as follows:

1. Read Only Memory or ROM (U141)—Programmed by the character being processed; emits each of eight sets of data on five parallel lines, the set being determined by the Row Counter; the five parallel lines represent the five columns of the character writing matrix. The ROM has 64-character selection capability. This consists of the middle four columns of the ASCII Code Chart. None of the lower case alphanumeric symbols can be generated; although eliminating character BIT 6 from the ROM permits characters from the right two columns of the ASCII Code Chart to be accepted and written as characters from an equivalent position in the two columns to the left.

2. Column Counter (U55B)—sequentially selects columns one through five, causing the crt beam to deflect in the X direction; selects the appropriate column out of the five outputs of the ROM for Z axis control.

3. Row Counter (U151)—cycles through the eight rows at each column selection; its output causes the crt beam to deflect in the Y direction; it also causes the ROM to emit five bits of writing information consistent with the selected row.

4. Z Multiplexer (U135)—emits an output controlled by one of the five signals from the ROM. The selection is controlled by the inputs from the Column Decoder.

5. Z Enable Gate (U155A)—sends 77 kHz Z ENABLE pulses to the Z Multiplexer.

6. Y Matrix Digital to Analog Converter—converts the digital output of the Row Counter into its analog equivalent for display beam positioning. Consists of resistor array with output Y MAT.

7. X Matrix Digital to Analog Converter—converts the digital output of the Column Counter into its equivalent analog voltage for display beam positioning. Consists of resistor array with output X MAT.

Scanning the Matrix. BIT 1-BIT 5 and BIT 7 applied to the data inputs of the ROM select the writing signals pertaining to the character being input. The BCD, ROW, inputs from the Row Counter, sequentially scan the matrix rows in the ROM at a 38 kHz rate. The combination of data select and Row scanning inputs results in dot disclosure information on the five output lines of the ROM to the Z Multiplexer circuit. The five lines represent each of the five columns of the matrix. With this information in mind, let's follow the Character Generator through the scanning sequence.

The output of the X and Y Matrix Digital to Analog circuits starts the display beam to the column 1, Row 8 position of the matrix. The eighth row of dots is not used since ROM has no information for that row. Since only seven counts of Row information is present; the eighth row is thus suppressed from writing. When a dot is to be written, the column 1 dot output is high. When the combined 77 and 38 kHz signals cause the output of the Z Multiplexer to go low, causing the Z Axis circuit to output a Z signal to write the dot. This is a 25% duty factor pulse.

The above process repeats itself; the 38 kHz pulses cause the Row Counter to count from 1 to 8, selecting row 8 to row 1 respectively; with each advance of the Row counter the Y Matrix Digital to Analog will change accordingly, positioning the display beam to follow the scanning sequence.

When the Row Counter resets state 0, the state 4 goes low. This causes the Column Counter output to advance to column 2. The output of the X Digital to Analog circuit changes and positions the display beam to the column 2 position. The last three columns are suppressed by grounding pins 12, 13, and 14 of U135.

**Character-in-Progress.** This flip-flop activates during generation of a character and is used by the X and Y Register control (upon completion of a character) to move the character matrix to the next character position.

**Cursor Control.** The Cursor Control allows the Alpha Cursor to be displayed when in Alpha mode. It prevents the cursor from being displayed in Hold mode, Graph mode, and when DRBUSY is low. Because of the timing characteristics of U101A, CR126, R22, and C23 have been provided to assure that the CURSOR BRIGHTNESS control varies the pulse width. The CURSOR BRIGHTNESS control is adjusted to allow the dots in the cursor to be viewable without storing. The minimum pulse output is 30 ns.

**Graph Mode Z Enable.** This block allows the Z signal to occur except when a dark vector should occur. A GS clears U301A, which prevents LOXE from enabling one-shot U101B. The first LOXE then clocks U301A, which allows U101B to cause the Z signal in Graph mode on all subsequent vectors, unless a GS clears U301A again, for another dark vector. The one-shot allows the Z signal for just long enough to complete a vector.

**Anti-Burn.** The Anit-Burn circuit interprets the X MOVE and Y MOVE steps to determine if either is 35 ±15 Tekpoints. If either is long enough, positive or negative, one of the four transistors will cause Q17 to reset the flip-flop formed by U121B and U121C. The Z signal will then pass undisturbed. If neither move is long enough to cause this switching action, the CHOP IT signal will pulse the Z signal at 77 kHz. This prevents short vectors from damaging the screen.

### Low Voltage Power Supply (1-5)

Refer to the Low Voltage Power Supply, schematic 1-5 and the drawing showing the component locations for the supply.

### Line Voltage Straps

Power is supplied to the instrument from J1001 through the power switch, fuse, and line voltage straps to the transformer primary. The diagram is drawn showing the 100- to 130-volt strap plugged into the MED position for 115-volt (+5%, −10%) line voltage. For 200- to 240-volt operation, use the 200- to 240-volt strap plugged into the appropriate position as shown on the diagram instructions.

**General Information.** As shown on the overlay blocks on the schematic diagram, this supply has regulated outputs of −12 volts, +5 volts, and +15 volts. It also contains unregulated outputs of −20 volts, +20 volts, +185 volts, and +320 volts.

**Regulated Supplies.** Voltage reference for the +15 and +5 volt regulated supplies is supplied by U81 and set by R66. The +15 regulated output supplies the voltage reference for the −12 volt supply.

**+15 Volt.** U81 regulator drives Q1085 series pass transistor. Current limiting is provided by the voltage across the current sense resistor R70 to drive the current limit input of U81.

U81 compares the +5-volt reference set by R66 and the +5 volts (from the +15-volt output through divider resistors R77 and R78). U81 output at pin 10 drives Q1085 to regulate the +15-volt output.

Supply current through R70 is limited to 400 milliamperes by U81.

**+5 Volt.** Regulation is accomplished by U375B, Q72, and Q1075. Current limiting uses current sense resistor R170 and Q72. For overvoltage protection, a crowbar circuit is used consisting of VR267 and Q171.

U375B compares the +5 volt reference set by R66 through R371 to the +5 volt supply voltage through R372. C371 is active on power up to prevent overshoot of the +5 volts. U375B output drives the series pass transistor Q1075.

When the current through R170 exceeds about 2 amperes, Q72 turns on to limit the drive to Q1075 to decrease the output voltage.

Overvoltage reference for the crowbar circuit is provided by the 6.2-volt zener VR267. Should the +5 volt supply exceed 6.2 volts, VR267 conducts to turn on the crowbar SCR Q171 which pulls the +5 volts supply down to about 1 volt. Once the crowbar SCR is turned on, the power must be turned off and back on to release and restore the circuit.

**−12 Volt.** Variations in the −12-volt supply are monitored by the R266/R367 divider resistor and cause U375A to regulate the −12-volt supply through Q465 and the series pass transistor Q1065.

Current limiting is provided by Q470 and the current sense resistor R471. Q470 starts current limiting the supply at about 230 milliamperes and reduces the conduction of Q465, and Q1065 to lower the output voltage.

## DISPLAY BOARD

### Deflection Multiplexer

Refer to the block diagram overlay on the Deflection Multiplexer schematic. These circuits allow the Hard Copy Unit to control the deflection amplifier circuits.

## Circuit Description—4006-1 Service

Deflection ramps from the Hard Copy Unit are switched to the X and Y Amplifiers when a hard copy is desired. At the same time the Z axis is interrogated, and the copy signal (TARSIG) from the crt is enabled.

The Make Copy Amp amplifies and stretches the COPY signal to output MAKE COPY.

Also the position information is modified to enhance the life of the crt.

**HCU Control.** Either the READ or the WAIT signal generate READ at the output of U552A to accomplish the following: (1) Enable U552B to allow the TARSIG signal output to the HCU. (2) The output of U552A is inverted by U555B to disable U552D, blocking the Z signal from the Z MPX output. (3) Enable U557B multivibrator and U552C gate so that INTERR signal will control the Z MPX signal to the crt. (4) Activate the Switch Driver circuit through inverter U555A. (This in turn will allow the X and Y RAMP signals, from the HCU, to control the X and Y AMP signals.)

When both the READ and the WAIT signals are high, the Control circuitry enables the X, Y and Z circuits from the terminal.

**Switch Driver.** The Switch Driver circuit includes inverter U555A, Q552, and Q551.

When the Terminal X deflection is enabled (READ signal must be low), Q552 is off and Q551 is on. This provides a negative voltage to reverse bias CR775 and a negative voltage to forward bias CR781.

When the X Hard Copy deflection is enabled, READ signal must be high causing Q552 to conduct and Q551 to be off. This provides positive voltage to forward bias CR775 and a positive voltage to reverse bias CR781.

**X Amp and Switch.** The circuit consists of two operational amplifiers; U777B is used for the X Hard Copy deflection and U777A for the terminal X deflection. The Switch Driver circuit, through diodes CR775 and CR781 turn one operational amplifier on and the other off as required.

When the terminal X deflection is required, CR775 is reverse biased, and the X signal is amplified by U777A, and output through CR677 to the X AMP signal out. At the same time CR781 is conducting to place a negative signal on U777B pin 5 causing CR678 to be reverse biased and thereby disconnect U777B output.

When the X Hard Copy deflection is used, CR781 is reverse biased, and the X RAMP signal is amplified by U777B and output through CR678 to the X AMP signal out. Note that the input signal can be attenuated by X HC GAIN control, R686, and a position adjustment can be made using the X HC POS control, R687. Also, CR775 is forward biased, and the positive voltage on pin 2 of U777A disconnects the output through diode CR677.

Q674 provides a constant current source for the X amplifier. Bias for Q674 (shown on diagram 2-3) is about 5.1 V above the −20 volts (unregulated).

**Y AMP and SWITCH.** The Y Amp and Switch has the same operational characteristics as the X Amp and switch circuit already discussed.

**Origin Shift.** The Origin Shifter circuit modifies the X and the Y position information to enhance the life of the crt. U791 is an eight position binary counter clocked by ORIGIN signal. ORIGIN is a logic pulse that is concurrent with the erase cycle. The output of the counter is fed through current dividers then added to the X and Y signals to modify the deflection reference position whenever the crt is erased. For calibration, the CAL-NORMAL strap is changed to the CAL position to clear the counter.

**Make Copy Amp.** The Make Copy circuit consists of Q354 and Q355. The circuit amplifies and stretches the input COPY signal and ouputs MAKE COPY signal.

## Crt Readout, Storage & +175 Volts Regulator

Refer to the overlay blocks on the schematic diagram. Input control signals are ERASE, READ, and VIEW. The signals control the blocks for the crt functions of view, erase, storage, and readout. The +175 Volt supply is a separate function shown on the diagram.

**+175 Volt Supply.** Regulation is accomplished by U445, Q244, and Q1036. U445 compares the reference +15 volts through dividers R444 and R443 (about 8 volts) with about 8 volts from the +175 volt supply through dividers R341 and R342 to drive Q244. Q244 collector current, through R242, R41 and R140, drives the series pass transistor Q1036 to regulate the supply.

**Erase Pulse Generator.** The circuit consists of a 14-millisecond multivibrator followed by a 950 millisecond multivibrator U557A and U566B. The ERASE signal triggers U557A which, after about 14 milliseconds, triggers U566B. Output of both multivibrators are combined to generate a DRBUSY signal, and to control the crt Flood Gun anode and the crt Anode #2 through the Flood

Gun Control circuitry. The output of U557A generates ORIGIN signal and controls the Flood Gun Anode and Cathode through the Flood Gun Control circuitry. The output of U566B controls the crt collimation electrodes through the Collimation Control circuitry. The signal also controls the Storage Backplate (STB) voltage through the Erase-Storage Backplate control circuitry.

**Flood Gun Control.** The circuit includes Q364, Q366, and Q1067. Inputs to the circuit come from the Erase Pulse Generator circuit (DRBUSY and ORIGIN) and the READ and VIEW signals.

Quiescently, the circuit holds the flood gun anode at about 150 V and the flood gun cathode at about zero volt. Assume Q364 and Q366 are at cut-off. Zener diodes VR266 and VR265 conducts to raise the base of Q1067 to about 150 V. Then Q1067 emitter sets the flood gun anode and Anode #2 to about 150 V. CR264 is conducting to hold the flood gun cathode at about zero volts.

**Erase & Storage Backplate Control.** The circuit includes Q251 for control with output voltage adjustment and feedback amplifier Q247, Q143, Q41, Q47, Q1039, and Q1044. The amplifier determines the backplate (STB) voltage. Quiescent output voltage is set by the R248 (OP LEVEL) to the appropriate voltage to store data on the screen.

Due to an ERASE signal, the output of U566B places a low signal (about 950 milliseconds duration) to inverter U561A. The inverted signal drives waveform generating circuits C353, R352 and Q251. This causes the output of the feedback amplifier to drop to about zero volts and then ramp back to its quiescent voltage, in about 700 milliseconds.

T154, connected between Q1039 emitter and Q1044 collector, provides a means of signal pickoff from the crt backplate (STB). The secondary of this transformer drives the crt Readout Amplifier.

**Collimation Control.** The circuit includes Q361 and Q362 for control and output voltage adjusting, and feedback amplifier Q162, Q165, and Q159. Quiescent conditions with Q361 OFF and Q362 ON provide current to the feedback amplifier. Adjustment for the current to the feedback amplifier is provided by R359 to set the output of the operational amplifier at about 90 volts. This places the CE1 and CE2 electrodes at about 90 volts.

Due to an ERASE signal, the output of U566B places a low signal (about 950 milliseconds duration) on Q361 base. Conduction of Q361 sets the output of the feedback amplifier and the CE1 and CE2 at about 35 volts.

When READ-1 signal is high and the screen is not being erased, Q362 is cut off to set the output of the feedback amplifier at about 175 volts.

**Crt Readout Amplifier.** Crt backplate signals from STB are coupled via T154 to the differential amplifier U155. The output of U155 is ac coupled to comparator U255. U255 provides a negative output pulse in response to STB signals of an amplitude determined by R252 (THRESHOLD). U255 output pulses are applied to one-shot multivibrator U566A, which responds by generating positive-going 20 $\mu$s pulses TARSIG.

## Deflection Amplifiers

Refer to the overlay blocks on the schematic diagram. The Deflection amplifier circuit uses the X and Y analog voltages and amplifies them to provide the drive signals to the X and Y deflection coils.

The X and Y signals are each applied to three circuits within the deflection amplifiers. The X signal goes to the X Absolute Value amplifier to generate a negative output signal regardless of the polarity of the X input signal. Then it is squared in the $X^2$ circuit and applied to the $X^2 + Y^2$ amplifier.

The X input and the output signal from the $X^2 + Y^2$ circuit drive the X Geometry Correction circuit. The Geometry signal is fed to the X Deflection amplifier. The X input signal also drives the X Deflection amplifier through R281. The X signal, X Geometry signal, and a feedback signal from the X Deflection amplifier combine at the input to the X Deflection amplifier. The output of the X Deflection amplifier provides the drive for the X Deflection coil. The Y Deflection amplifier circuit functions in a similar manner.

**X Absolute Amplifier.** The X Absolute amplifier consists of operational amplifier U496A. When a negative signal is applied, CR597 conducts to apply a negative signal to the positive input of the operational amplifier, and to the negative input of the operational amplifier. The amplifier operates as a follower to apply a negative-going unity gain signal at the anode of CR395. When a positive input signal is applied, CR597 is reverse biased, and the operational amplifier operates as a unity gain inverter (R493/R592) and develops a negative-going signal at the anode of CR395. CR395 provides a fixed offset voltage allowing pin 1 of U496A to operate at about 0.7 volt more negative than the absolute value signal.

**$X^2$ Amplifier.** The absolute value of the X input signal from U496A is applied to the $X^2$ amplifier Q481, a dual transistor transconductance multiplier. The offset signal from pin 1 of U496A is applied to the emitters of Q481 via

R485. The absolute value of X from the anode of CR395 is applied to one base through divider network R483 and R482. Under these conditions, Q481 collector current difference is proportional to the square of the input (absolute) voltage. The output signals at Q481 collectors are combined with the signals from Q482 (the $Y^2$ signal); with the resultant signal being applied to the differential inputs of U381A.

**$X^2 + Y^2$ Amplifier.** The $X^2 + Y^2$ amplifier consists of U381A. U381 operates as differential amplifier to produce $X^2 + Y^2$ output which it applies to the emitters of U296A.

**X Geometry Correction.** The circuit consists of U296A, a monolithic transistor array operating as a transconductance multiplier. A portion of the X signal, set by R393 (X GEOM), is applied to one base of U296A and the $X^2 \times Y^2$ signal is applied to the emitters of U296A. This causes different voltages at the collectors of U296A to be approximately equal to $KX (X^2 + Y^2)$. These signals are applied to the Deflection amplifier as a geometry correction signal.

**X Deflection Amplifier.** X Deflection amplifier consists of U184A, Q84, Q186, Q1069, and Q1074. The signals from X, X Geometry Correction, X Position (adjusted by R271), X GAIN are summed differentially by U184A. U184A developes an output signal at pin 1, which Q84 inverts and amplifies applying it to complementary emitter-followers Q1069 and Q1074. The current from the emitter-followers drives the X deflection coil and develops feedback voltage across R270, R74C and R74D. Overall feedback and gain are adjusted by gain control R279. Q186 operates as a current source to provide the necessary negative-going current drive for the output emitter-followers.

**Y Absolute Value Amplifier, $Y^2$ Amplifier, Y Geometry Correction, and Y Deflection Amplifier.** The function of each of these circuits is directly comparable to its X counterpart.

## High-Voltage and Z Axis (2-4)

Refer to the overlay blocks as shown on the schematic diagram 2-4. These circuits control the supplies for the writing gun of the crt. A Regulator-oscillator drives a transformer to produce the various voltages required by the circuits. The Regulator receives drive from one of the secondary windings, and also receives biasing voltage for its control amplifier from a secondary winding. In addition, a high voltage feedback signal is applied to the Regulator to keep the high voltage at a given value.

Transformer T314, driven by the Regulator-oscillator, provides power for Focus, Filament, High Voltage, and Control Grid supplies. Intensity control sets the signal output amplitude of the Z Signal amplifier. Z Signal amplifier output is coupled to the crt control grid, by way of a DC Restorer circuit.

Dynamic Focus signal changes the crt Focus voltage. This compensates for defocusing due to the writing beam deflection from crt center to crt edge.

**High Voltage Supply.** Voltage from T314 secondary winding (pins 8 & 9) is doubled by C312, CR312, CR203, and C215. This voltage is used to elevate the filament supply and with further filtering provides the high voltage for the crt cathode measured at TP102. A portion of the voltage is used for feedback (back to the Regulator-oscillitor circuit) to regulate the supply. This feedback voltage is set by R224 HV ADJ.

**Control Grid Supply** The supply operates from an additional tap on T314 secondary High Voltage winding through R18. With the bias set by R129, the circuit causes a negative voltage on the crt grid in relation to the cathode via a Dc Restorer circuit consisting of C12, C110, CR103, CR4, CR121, and CR24. In addition to this bias, the Intensity Control and the Z Signal amplifier circuits change the crt grid bias via Q122.

**Intensity control.** With the READ signal low, Q231 base is set by divider resistors R132 and R235 to output about +65 volts to the Z Signal amplifier circuit at Q123 collector. When READ-1 signal goes high, additional divider, including R1050 the Hard Copy Intensity adjustment, is inserted into the circuit. This allows the output voltage to Q123 collector to be adjusted lower for a hard copy.

**Z Signal Amplifier.** The circuit amplifies the ZMPX signal and applies it to the crt grid. Q123 amplifies the signal with a maximum positive collector voltage set by the Intensity Control circuit. Emitter follower Q122 drives the crt grid through C110.

**Focus Supply.** Voltage from T324 secondary winding (pins 7 & 8) is doubled by C311, CR311, CR204, and C113. This supply is elevated by the Dynamic Focus circuit. The Dynamic Focus circuit is adjusted by R36. Focus control is R13.

The voltage is about the same as the output of the High Voltage supply. A portion of the voltage is selected by the FOCUS control to drive the crt focus anode.

Dynamic Focus circuit consists of feedback amplifier Q31 and Q29 which adds from +35 to +90 volts to the

focus voltage. The added focus voltage at Q29 collector is a result of Dynamic Focus signal input and R36 setting (Dynamic Focus adjustment).

**Filament Supply.** T314 secondary winding from pins 11 and 12 supply the crt filaments. The filaments are elevated to the same voltage as the crt cathode by R208 and R209.

## KEYBOARD

### General Description

The overlay blocks on the schematic diagram 3-1 show the Keyboard principal circuits. These circuits combine to generate a coded character output on data bit lines KB1-1 through KB7-1, and to develop a strobe pulse labeled KSTRB-1 to accompany the data bits.

### Keyboard Description

Assume that no character keys are pressed, so no characters are being entered. The oscillator generates a symmetrical output pulse that is applied to Z9D (the input gate), to the 4 LSB Counter Z2, and to Z4 and Z7C in the Strobe generator. Z9D enables the counter to continuously cycle through its 16 counts. Each time it completes a cycle, it feeds a pulse to Z3, the 3 MSB Counter, causing it to advance one. The 3 MSB Counter continuously cycles through its 8 counts. During this operation (when no character keys are pressed), the W output of the Character Detector Z6, inhibits the one shot timer Z4, which in turn inhibits the Character output gates (Z8A,B,C,D and Z9A,B,C). The other inputs of the Character Detector are the A, B, C inputs (÷2, 4, 8) from the 3 MSB counter Z3.

When a character key is pressed, contact is made between an output of the Character Decoder Z5 and an input of the Character Detector Z6. The counters continue to count until the closed key is selected. The W output of the Character Detector then goes high. This high enables the Strobe Generator Z4 to produce a character enable pulse of at least 7 milliseconds. The Q output from the Strobe Generator Z4 disables the 4 LSB Counter to prevent additional clock pulses from affecting the Counter. At the same time, this low goes to the Control latch Z7B (Bit 7 Control Gates and CNTL Key block) and the shift latch Z7A (Bit 5 Control Gates and Shift Key block) to gate through either the low or high from those devices, as determined by the position of the Shift or Control keys. The high from the Q output of the Strobe Generator Z4 goes to the Character Output Gates, placing data on the K1 through K7 lines. When the Oscillator Z13B output again goes low, it toggles Z7C in the Strobe Generator to develop a high strobe signal labeled KSTRB-1, which accompanies the data bits. The lows from Z13B are applied continuously to Z4, and maintain it in its one-set condition while the character key is held down. When the key is released, the high from the Character Detector (Z6 pin W) is removed from the Strobe Generator Z4, which permits Z4 to return to its zero-set state. This ends the K1 through K7 output signals. Then, the next negative-going output of Z13B terminates the strobe (KSTRB-1) output.

Note that the Bit 5 Control circuitry connects to some keys, the Counters, and the Shift key latch Z7A to affect the Bit 5 output. The Bit 7 Control circuitry connects from the Counters, and CNTL key latch Z7A to affect the Bit 7 output.

**Keyboard Troubleshooting.** The Keyboard diagram is useful to isolate the trouble if the trouble is on the circuit board. Try to isolate the Keyboard part by the operation of the Terminal. If the keys do not operate at all, check the following in order:

| Location | Check |
|---|---|
| 1. J80, pin 4 or 5 | +5 Volts. |
| 2. Z13B, pin 6 | Oscillator output. |
| 3. TP1, 2, 3 & 4 | ÷2, 4, 16 the 4 LSB Counter (no character keys pressed). |
| 4. TP5, 6 & 7 | ÷2, 4, 8 the 3 MSB Counter signal (no character keys pressed). |
| 5. TP8 | Low signal (no character keys pressed). |
| 6. J80, pin 6. | Strobe output signal, KSTRB-1/. |
| 7. J80, pins 9 through 15 | Data output signals. KB1-1 through KB7-1 (high until keys are depressed). |

# Section 4

# OPTIONS

No option information available at the time of this printing.

# REPLACEABLE ELECTRICAL PARTS

## PARTS ORDERING INFORMATION

Replacement parts are available from or through your local Tektronix, Inc. Field Office or representative.

Changes to Tektronix instruments are sometimes made to accommodate improved components as they become available, and to give you the benefit of the latest circuit improvements developed in our engineering department. It is therefore important, when ordering parts, to include the following information in your order: Part number, instrument type or number, serial number, and modification number if applicable.

If a part you have ordered has been replaced with a new or improved part, your local Tektronix, Inc. Field Office or representative will contact you concerning any change in part number.

Change information, if any, is located at the rear of this manual.

## SPECIAL NOTES AND SYMBOLS

| | |
|---|---|
| X000 | Part first added at this serial number |
| 00X | Part removed after this serial number |

### ITEM NAME

In the Parts List, an Item Name is separated from the description by a colon (:). Because of space limitations, an Item Name may sometimes appear as incomplete. For further Item Name identification, the U.S. Federal Cataloging Handbook H6-1 can be utilized where possible.

## ABBREVIATIONS

| | | | |
|---|---|---|---|
| ACTR | ACTUATOR | PLSTC | PLASTIC |
| ASSY | ASSEMBLY | QTZ | QUARTZ |
| CAP | CAPACITOR | RECP | RECEPTACLE |
| CER | CERAMIC | RES | RESISTOR |
| CKT | CIRCUIT | RF | RADIO FREQUENCY |
| COMP | COMPOSITION | SEL | SELECTED |
| CONN | CONNECTOR | SEMICOND | SEMICONDUCTOR |
| ELCTLT | ELECTROLYTIC | SENS | SENSITIVE |
| ELEC | ELECTRICAL | VAR | VARIABLE |
| INCAND | INCANDESCENT | WW | WIREWOUND |
| LED | LIGHT EMITTING DIODE | XFMR | TRANSFORMER |
| NONWIR | NON WIREWOUND | XTAL | CRYSTAL |

# CROSS INDEX—MFR. CODE NUMBER TO MANUFACTURER

| Mfr. Code | Manufacturer | Address | City, State, Zip |
|---|---|---|---|
| 01121 | ALLEN-BRADLEY COMPANY | 1201 2ND STREET SOUTH | MILWAUKEE, WI 53204 |
| 01295 | TEXAS INSTRUMENTS, INC., SEMICONDUCTOR GROUP | P O BOX 5012, 13500 N CENTRAL EXPRESSWAY | DALLAS, TX 75222 |
| 02735 | RCA CORPORATION, SOLID STATE DIVISION | ROUTE 202 | SOMERVILLE, NY 08876 |
| 03508 | GENERAL ELECTRIC COMPANY, SEMI-CONDUCTOR PRODUCTS DEPARTMENT | ELECTRONICS PARK | SYRACUSE, NY 13201 |
| 03888 | KDI PYROFILM CORPORATION | 60 S JEFFERSON ROAD | WHIPPANY, NJ 07981 |
| 04222 | AVX CERAMICS, DIVISION OF AVX CORP. | P O BOX 867, 19TH AVE. SOUTH | MURTLE BEACH, SC 29577 |
| 04713 | MOTOROLA, INC., SEMICONDUCTOR PROD. DIV. | 5005 E MCDOWELL RD,PO BOX 20923 | PHOENIX, AZ 85036 |
| 05347 | ULTRONIX, INC. | 461 N 22ND STREET | GRAND JUNCTION, CO 81501 |
| 07109 | OAKTRON INDUSTRIES, INC. | 704 30TH STREET | MONROE, WI 53566 |
| 07263 | FAIRCHILD SEMICONDUCTOR, A DIV. OF FAIRCHILD CAMERA AND INSTRUMENT CORP. | 464 ELLIS STREET | MOUNTAIN VIEW, CA 94042 |
| 07910 | TELEDYNE SEMICONDUCTOR | 12515 CHADRON AVE. | HAWTHORNE, CA 90250 |
| 08806 | GENERAL ELECTRIC CO., MINIATURE LAMP PRODUCTS DEPARTMENT | NELA PARK | CLEVELAND, OH 44112 |
| 14099 | SEMTECH CORP. | 652 MITCHELL RD. | NEWBURY PARK, CA 91320 |
| 14752 | ELECTRO CUBE INC. | 1710 S. DEL MAR AVE. | SAN GABRIEL, CA 91776 |
| 14939 | DELBAR PRODUCTS INC. | 7TH AND SPRUCE | PERKASIE, PA 18944 |
| 18324 | SIGNETICS CORP. | 811 E. ARQUES | SUNNYVALE, CA 94086 |
| 27014 | NATIONAL SEMICONDUCTOR CORP. | 2900 SEMICONDUCTOR DR. | SANTA CLARA, CA 95051 |
| 27193 | CUTLER-HAMMER, INC. SPECIALTY PRODUCTS DIVISION | 4201 N. 27TH ST. | MILWAUKEE, WI 53216 |
| 32159 | WEST-CAP ARIZONA | 2201 E. ELVIRA ROAD | TUCSON, AZ 85706 |
| 32293 | INTERSIL, INC. | 10900 N. TANTAU AVE. | CUPERTINO, CA 95014 |
| 32997 | BOURNS, INC., TRIMPOT PRODUCTS DIV. | 1200 COLUMBIA AVE. | RIVERSIDE, CA 92507 |
| 50522 | MONSANTO CO., ELECTRONIC SPECIAL PRODUCTS | 3400 HILLVIEW AVENUE | PALO ALTO, CA 94304 |
| 50558 | ELECTRONIC CONCEPTS, INC. | 526 INDUSTRIAL WAY WEST | EATONTOWN, NJ 07724 |
| 56289 | SPRAGUE ELECTRIC CO. | | NORTH ADAMS, MA 01247 |
| 71400 | BUSSMAN MFG., DIVISION OF MCGRAW-EDISON CO. | 2536 W. UNIVERSITY ST. | ST. LOUIS, MO 63107 |
| 72982 | ERIE TECHNOLOGICAL PRODUCTS, INC. | 644 W. 12TH ST. | ERIE, PA 16512 |
| 73138 | BECKMAN INSTRUMENTS, INC., HELIPOT DIV. | 2500 HARBOR BLVD. | FULLERTON, CA 92634 |
| 75042 | TRW ELECTRONIC COMPONENTS, IRC FIXED RESISTORS, PHILADELPHIA DIVISION | 401 N. BROAD ST. | PHILADELPHIA, PA 19108 |
| 76493 | BELL INDUSTRIES, INC., MILLER, J. W., DIV. | 19070 REYES AVE., P O BOX 5825 | COMPTON, CA 90224 |
| 80009 | TEKTRONIX, INC. | P O BOX 500 | BEAVERTON, OR 97077 |
| 81483 | INTERNATIONAL RECTIFIER CORP. | 9220 SUNSET BLVD. | LOS ANGELES, CA 90069 |
| 82389 | SWITCHCRAFT, INC. | 5555 N. ELSTON AVE. | CHICAGO, IL 60630 |
| 83003 | VARO, INC. | P O BOX 411, 2203 WALNUT STREET | GARLAND, TX 75040 |
| 84411 | TRW ELECTRONIC COMPONENTS, TRW CAPACITORS | 112 W. FIRST ST. | OGALLALA, NE 69153 |
| 86684 | RCA CORP., ELECTRONIC COMPONENTS DIV. | 415 S. 5TH STREET | HARRISON, NJ 07029 |
| 90201 | MALLORY CAPACITOR CO., DIV. OF P. R. MALLORY AND CO., INC. | 3029 E WASHINGTON STREET P O BOX 372 | INDIANAPOLIS, IN 46206 |
| 91418 | RADIO MATERIALS COMPANY, DIV. OF P.R. MALLORY AND COMPANY, INC. | 4242 W BRYN MAWR | CHICAGO, IL 60646 |
| 91637 | DALE ELECTRONICS, INC. | P. O. BOX 609 | COLUMBUS, NE 68601 |

| Ckt No. | Tektronix Part No. | Serial/Model No. Eff | Dscont | Name & Description | Mfr Code | Mfr Part Number |
|---|---|---|---|---|---|---|
| | | | | CIRCUIT BOARD ASSEMBLIES | | |
| A1 | 672-0526-00 | | | CKT BOARD ASSY:PWR SPLY AND LOGIC W/HT SINK | 80009 | 672-0526-00 |
| A2 | 672-0537-00 | | | CKT BOARD ASSY:DISPLAY W/HT SINK | 80009 | 672-0537-00 |
| A2 | 672-0537-01 | | | CKT BOARD ASSY:DISPLAY W/HT SINK | 80009 | 672-0537-01 |
| A2 | 672-0537-02 | | | CKT BOARD ASSY:DISPLAY W/HT SINK | 80009 | 672-0537-02 |
| A2 | 672-0537-03 | | | CKT BOARD ASSY:DISPLAY W/HT SINK | 80009 | 672-0537-02 |
| A2 | 672-0537-04 | | | CKT BOARD ASSY:DISPLAY W/HT SINK | 80009 | 672-0537-04 |
| A2 | 672-0537-05 | | | CKT BOARD ASSY:DISPLAY W/HT SINK | 80009 | 672-0537-05 |
| A3 | 119-0304-02 | | | KEYBOARD: | 80009 | 119-0304-02 |
| A4[1] | 670-4092-00 | | | CKT BOARD ASSY:HALF DUPLEX | 80009 | 670-4092-00 |
| | | | | A1 POWER SUPPLY AND LOGIC W/HEAT SINK | | |
| C3 | 281-0576-00 | | | CAP.,FXD,CER DI:11PF,5%,500V | 72982 | 301-000C0G0110J |
| C18 | 281-0773-00 | | | CAP.,FXD,CER DI:0.01UF,10%,100V | 72982 | 8005H9AADW5R103K |
| C23 | 281-0637-00 | | | CAP.,FXD,CER DI:91PF,5%,500V | 72982 | 301000Z5D910J |
| C65 | 283-0177-00 | | | CAP.,FXD,CER DI:1UF,+80-20%,25V | 72982 | 8131N039 E 105Z |
| C74 | 281-0525-00 | | | CAP.,FXD,CER DI:470PF,+/-94PF,500V | 04222 | 7001-1364 |
| C81 | 281-0525-00 | | | CAP.,FXD,CER DI:470PF,+/-94PF,500V | 04222 | 7001-1364 |
| C102 | 285-1133-00 | | | CAP.,FXD,PLSTC:0.33UF,1%,100V | 50558 | X347A3303A1F |
| C107 | 283-0000-00 | | | CAP.,FXD,CER DI:0.001UF,+100-0%,500V | 72982 | 831-516E102P |
| C108 | 283-0000-00 | | | CAP.,FXD,CER DI:0.001UF,+100-0%,500V | 72982 | 831-516E102P |
| C131 | 283-0177-00 | | | CAP.,FXD,CER DI:1UF,+80-20%,25V | 72982 | 8131N039 E 105Z |
| C136 | 283-0177-00 | | | CAP.,FXD,CER DI:1UF,+80-20%,25V | 72982 | 8131N039 E 105Z |
| C140 | 283-0177-00 | | | CAP.,FXD,CER DI:1UF,+80-20%,25V | 72982 | 8131N039 E 105Z |
| C143 | 281-0549-00 | | | CAP.,FXD,CER DI:68PF,10%,500V | 72982 | 301-000U2J0680K |
| C144 | 283-0000-00 | | | CAP.,FXD,CER DI:0.001UF,+100-0%,500V | 72982 | 831-516E102P |
| C145 | 281-0549-00 | | | CAP.,FXD,CER DI:68PF,10%,500V | 72982 | 301-000U2J0680K |
| C151 | 283-0177-00 | | | CAP.,FXD,CER DI:1UF,+80-20%,25V | 72982 | 8131N039 E 105Z |
| C162 | 290-0530-00 | | | CAP.,FXD,ELCTLT:68UF,20%,6V | 90201 | TDC686M006NLF |
| C166 | 290-0145-00 | | | CAP.,FXD,ELCTLT:10UF,+75-10%,50V | 56289 | 30D106G050CB9 |
| C168 | 290-0301-00 | | | CAP.,FXD,ELCTLT:10UF,10%,20V | 56289 | 150D106X9020B2 |
| C172 | 290-0145-00 | | | CAP.,FXD,ELCTLT:10UF,+75-10%,50V | 56289 | 30D106G050CB9 |
| C188 | 290-0508-00 | | | CAP.,FXD,ELCTLT:18,000UF,+100-10%,15V | 56289 | 68D10444 |
| C195 | 290-0636-00 | | | CAP.,FXD,ELCTLT:7500UF,+100-10%,25V | 56289 | 68D10501 |
| C206 | 281-0773-00 | | | CAP.,FXD,CER DI:0.01UF,10%,100V | 72982 | 8005H9AADW5R103K |
| C217 | 283-0177-00 | | | CAP.,FXD,CER DI:1UF,+80-20%,25V | 72982 | 8131N039 E 105Z |
| C221 | 281-0773-00 | | | CAP.,FXD,CER DI:0.01UF,10%,100V | 72982 | 8005H9AADW5R103K |
| C226 | 281-0773-00 | | | CAP.,FXD,CER DI:0.01UF,10%,100V | 72982 | 8005H9AADW5R103K |
| C246 | 281-0773-00 | | | CAP.,FXD,CER DI:0.01UF,10%,100V | 72982 | 8005H9AADW5R103K |
| C262 | 290-0536-00 | | | CAP.,FXD,ELCTLT:10UF,20%,25V | 90201 | TDC106M025FL |
| C268 | 283-0023-00 | | | CAP.,FXD,CER DI:0.1UF,+80-20%,12V | 91418 | MX104Z1201R0 |
| C306 | 281-0773-00 | | | CAP.,FXD,CER DI:0.01UF,10%,100V | 72982 | 8005H9AADW5R103K |
| C321 | 281-0773-00 | | | CAP.,FXD,CER DI:0.01UF,10%,100V | 72982 | 8005H9AADW5R103K |
| C365 | 283-0104-00 | | | CAP.,FXD,CER DI:2000PF,5%,500V | 72982 | 811-565B202J |
| C366 | 283-0000-00 | | | CAP.,FXD,CER DI:0.001UF,+100-0%,500V | 72982 | 831-516E102P |
| C371 | 283-0177-00 | | | CAP.,FXD,CER DI:1UF,+80-20%,25V | 72982 | 8131N039 E 105Z |

[1] Option 1 021-0173-00 only.

| Ckt No. | Tektronix Part No. | Serial/Model No. Eff | Dscont | Name & Description | Mfr Code | Mfr Part Number |
|---|---|---|---|---|---|---|
| C372 | 283-0000-00 | | | CAP.,FXD,CER DI:0.001UF,+100-0%,500V | 72982 | 831-516E102P |
| C373 | 283-0104-00 | | | CAP.,FXD,CER DI:2000PF,5%,500V | 72982 | 811-565B202J |
| C388 | 290-0509-00 | | | CAP.,FXD,ELCTLT:3000UF,+100-10%,50V | 56289 | 68D10454 |
| C395 | 290-0549-00 | | | CAP.,FXD,ELCTLT:150UF,400VDC/250VDC | 56289 | 68D20193 |
| C401 | 285-0596-00 | | | CAP.,FXD,PLSTC:0.01UF,1%,100V | 14752 | 410B1B103F |
| C412 | 281-0773-00 | | | CAP.,FXD,CER DI:0.01UF,10%,100V | 72982 | 8005H9AADW5R103K |
| C421 | 281-0773-00 | | | CAP.,FXD,CER DI:0.01UF,10%,100V | 72982 | 8005H9AADW5R103K |
| C425 | 281-0773-00 | | | CAP.,FXD,CER DI:0.01UF,10%,100V | 72982 | 8005H9AADW5R103K |
| C451 | 283-0177-00 | | | CAP.,FXD,CER DI:1UF,+80-20%,25V | 72982 | 8131N039 E 105Z |
| C456 | 283-0177-00 | | | CAP.,FXD,CER DI:1UF,+80-20%,25V | 72982 | 8131N039 E 105Z |
| C472 | 290-0145-00 | | | CAP.,FXD,ELCTLT:10UF,+75-10%,50V | 56289 | 30D106G050CB9 |
| C501 | 285-0596-00 | | | CAP.,FXD,PLSTC:0.01UF,1%,100V | 14752 | 410B1B103F |
| C646 | 281-0773-00 | | | CAP.,FXD,CER DI:0.01UF,10%,100V | 72982 | 8005H9AADW5R103K |
| C701 | 285-0596-00 | | | CAP.,FXD,PLSTC:0.01UF,1%,100V | 14752 | 410B1B103F |
| C703 | 285-0596-00 | | | CAP.,FXD,PLSTC:0.01UF,1%,100V | 14752 | 410B1B103F |
| C710 | 283-0177-00 | | | CAP.,FXD,CER DI:1UF,+80-20%,25V | 72982 | 8131N039 E 105Z |
| C711 | 283-0177-00 | | | CAP.,FXD,CER DI:1UF,+80-20%,25V | 72982 | 8131N039 E 105Z |
| C714 | 281-0525-00 | | | CAP.,FXD,CER DI:470PF,+/-94PF,500V | 04222 | 7001-1364 |
| CR126 | 152-0075-00 | | | SEMICOND DEVICE:GE,25V,40MA | 80009 | 152-0075-00 |
| CR203 | 152-0141-02 | | | SEMICOND DEVICE:SILICON,30V,150MA | 07910 | 1N4152 |
| CR261 | 152-0141-02 | | | SEMICOND DEVICE:SILICON,30V,150MA | 07910 | 1N4152 |
| CR262 | 152-0141-02 | | | SEMICOND DEVICE:SILICON,30V,150MA | 07910 | 1N4152 |
| CR275 | 152-0198-00 | | | SEMICOND DEVICE:SILICON,200V,3A | 04713 | 1N4721 |
| CR278 | 152-0198-00 | | | SEMICOND DEVICE:SILICON,200V,3A | 04713 | 1N4721 |
| CR279 | 152-0198-00 | | | SEMICOND DEVICE:SILICON,200V,3A | 04713 | 1N4721 |
| CR280 | 152-0198-00 | | | SEMICOND DEVICE:SILICON,200V,3A | 04713 | 1N4721 |
| CR283 | 152-0406-00 | | | SEMICOND DEVICE:SILICON,200V,3A | 80009 | 152-0406-00 |
| CR495 | 152-0200-00 | | | SEMICOND DEVICE:SILICON,400V,1500MA | 80009 | 152-0200-00 |
| CR498 | 152-0200-00 | | | SEMICOND DEVICE:SILICON,400V,1500MA | 80009 | 152-0200-00 |
| CR508 | 152-0141-02 | | | SEMICOND DEVICE:SILICON,30V,150MA | 07910 | 1N4152 |
| CR509 | 152-0141-02 | | | SEMICOND DEVICE:SILICON,30V,150MA | 07910 | 1N4152 |
| CR510 | 152-0141-02 | | | SEMICOND DEVICE:SILICON,30V,150MA | 07910 | 1N4152 |
| CR511 | 152-0141-02 | | | SEMICOND DEVICE:SILICON,30V,150MA | 07910 | 1N4152 |
| CR512 | 152-0141-02 | | | SEMICOND DEVICE:SILICON,30V,150MA | 07910 | 1N4152 |
| CR513 | 152-0141-02 | | | SEMICOND DEVICE:SILICON,30V,150MA | 07910 | 1N4152 |
| CR514 | 152-0141-02 | | | SEMICOND DEVICE:SILICON,30V,150MA | 07910 | 1N4152 |
| CR515 | 152-0141-02 | | | SEMICOND DEVICE:SILICON,30V,150MA | 07910 | 1N4152 |
| CR516 | 152-0141-02 | | | SEMICOND DEVICE:SILICON,30V,150MA | 07910 | 1N4152 |
| CR517 | 152-0141-02 | | | SEMICOND DEVICE:SILICON,30V,150MA | 07910 | 1N4152 |
| CR524 | 152-0141-02 | | | SEMICOND DEVICE:SILICON,30V,150MA | 07910 | 1N4152 |
| CR525 | 152-0141-02 | | | SEMICOND DEVICE:SILICON,30V,150MA | 07910 | 1N4152 |
| CR526 | 152-0141-02 | | | SEMICOND DEVICE:SILICON,30V,150MA | 07910 | 1N4152 |
| CR527 | 152-0141-02 | | | SEMICOND DEVICE:SILICON,30V,150MA | 07910 | 1N4152 |
| CR528 | 152-0141-02 | | | SEMICOND DEVICE:SILICON,30V,150MA | 07910 | 1N4152 |
| CR529 | 152-0141-02 | | | SEMICOND DEVICE:SILICON,30V,150MA | 07910 | 1N4152 |
| CR530 | 152-0141-02 | | | SEMICOND DEVICE:SILICON,30V,150MA | 07910 | 1N4152 |
| CR531 | 152-0141-02 | | | SEMICOND DEVICE:SILICON,30V,150MA | 07910 | 1N4152 |
| CR532 | 152-0141-02 | | | SEMICOND DEVICE:SILICON,30V,150MA | 07910 | 1N4152 |
| CR533 | 152-0141-02 | | | SEMICOND DEVICE:SILICON,30V,150MA | 07910 | 1N4152 |
| CR559 | 152-0075-00 | | | SEMICOND DEVICE:GE,25V,40MA | 80009 | 152-0075-00 |
| F170 | 159-0126-00 | | | FUSE,CARTRIDGE:3AG,2.5A,250V,0.65 SEC | 71400 | AGC2-1/2 |

| Ckt No. | Tektronix Part No. | Serial/Model No. Eff | Dscont | Name & Description | Mfr Code | Mfr Part Number |
|---|---|---|---|---|---|---|
| L141 | 108-0317-00 | | | COIL,RF:15UH | 32159 | 71501M |
| L147 | 108-0317-00 | | | COIL,RF:15UH | 32159 | 71501M |
| Q17 | 151-1025-00 | | | TRANSISTOR:SILICON,JFE,N-CHANNEL | 80009 | 151-1025-00 |
| Q20 | 151-0190-02 | | | TRANSISTOR:SILICON,NPN | 80009 | 151-0190-02 |
| Q62 | 151-0192-00 | | | TRANSISTOR:SILICON,NPN,SEL FROM MPS6521 | 80009 | 151-0192-00 |
| Q72 | 151-0302-00 | | | TRANSISTOR:SILICON,NPN | 04713 | 2N2222A |
| Q112 | 151-0190-02 | | | TRANSISTOR:SILICON,NPN | 80009 | 151-0190-02 |
| Q113 | 151-0190-02 | | | TRANSISTOR:SILICON,NPN | 80009 | 151-0190-02 |
| Q114 | 151-0188-00 | | | TRANSISTOR:SILICON,PNP | 01295 | 2N3906 |
| Q115 | 151-0188-00 | | | TRANSISTOR:SILICON,PNP | 01295 | 2N3906 |
| Q171 | 151-0506-00 | | | TRANSISTOR:SILICON,SCR | 03508 | C106B2 |
| Q261 | 151-0302-00 | | | TRANSISTOR:SILICON,NPN | 04713 | 2N2222A |
| Q460 | 151-0302-00 | | | TRANSISTOR:SILICON,NPN | 04713 | 2N2222A |
| Q462 | 151-0188-00 | | | TRANSISTOR:SILICON,PNP | 01295 | 2N3906 |
| Q465 | 151-0134-00 | | | TRANSISTOR:SILICON,PNP | 80009 | 151-0134-00 |
| Q470 | 151-0188-00 | | | TRANSISTOR:SILICON,PNP | 01295 | 2N3906 |
| Q704 | 151-0188-00 | | | TRANSISTOR:SILICON,PNP | 01295 | 2N3906 |
| Q706 | 151-1078-00 | | | TRANSISTOR:SILICON,JFE,N-CHANNEL | 80009 | 151-1078-00 |
| Q708 | 151-0178-00 | | | TRANSISTOR:SILICON,PNP | 80009 | 151-0178-00 |
| Q1065 | 151-0323-00 | | | TRANSISTOR:SILICON,NPN,SEL FROM MJE521 | 80009 | 151-0323-00 |
| Q1075 | 151-0405-00 | | | TRANSISTOR:SILICON,NPN,SEL FROM MJE800 | 80009 | 151-0405-00 |
| Q1085 | 151-0323-00 | | | TRANSISTOR:SILICON,NPN,SEL FROM MJE521 | 80009 | 151-0323-00 |
| R2 | 311-1558-00 | | | RES.,VAR,NONWIR:20K OHM,20%,0.50W | 73138 | 91A R20K |
| R19 | 315-0150-00 | | | RES.,FXD,CMPSN:15 OHM,5%,0.25W | 01121 | CB1505 |
| R22 | 315-0822-00 | | | RES.,FXD,CMPSN:8.2K OHM,5%,0.25W | 01121 | CB8225 |
| R30 | 315-0472-00 | | | RES.,FXD,CMPSN:4.7K OHM,5%,0.25W | 01121 | CB4725 |
| R31 | 315-0472-00 | | | RES.,FXD,CMPSN:4.7K OHM,5%,0.25W | 01121 | CB4725 |
| R32 | 315-0472-00 | | | RES.,FXD,CMPSN:4.7K OHM,5%,0.25W | 01121 | CB4725 |
| R33 | 315-0472-00 | | | RES.,FXD,CMPSN:4.7K OHM,5%,0.25W | 01121 | CB4725 |
| R64 | 315-0273-00 | | | RES.,FXD,CMPSN:27K OHM,5%,0.25W | 01121 | CB2735 |
| R66 | 311-1564-00 | | | RES.,VAR,NONWIR:500 OHM,20%,0.50W | 73138 | 91A R500 |
| R70 | 308-0058-00 | | | RES.,FXD,WW:1.5 OHM,10%,1W | 75042 | BW20-1R500K |
| R75 | 321-0181-00 | | | RES.,FXD,FILM:750 OHM,1%,0.125W | 91637 | MFF1816G750R0F |
| R76 | 321-0226-00 | | | RES.,FXD,FILM:2.21K OHM,1%,0.125W | 91637 | MFF1816G22100F |
| R77 | 321-0603-00 | | | RES.,FXD,FILM:15K OHM,0.25%,0.125W | 91637 | MFF1816D15001C |
| R78 | 321-0604-00 | | | RES.,FXD,FILM:30K OHM,0.25%,0.125W | 91637 | MFF1816D30001C |
| R79 | 315-0332-00 | | | RES.,FXD,CMPSN:3.3K OHM,5%,0.25W | 01121 | CB3325 |
| R101 | 321-0308-00 | | | RES.,FXD,FILM:15.8K OHM,1%,0.125W | 91637 | MFF1816G15801F |
| R106 | 315-0512-00 | | | RES.,FXD,CMPSN:5.1K OHM,5%,0.25W | 01121 | CB5125 |
| R109 | 315-0681-00 | | | RES.,FXD,CMPSN:680 OHM,5%,0.25W | 01121 | CB6815 |
| R110 | 315-0303-00 | | | RES.,FXD,CMPSN:30K OHM,5%,0.25W | 01121 | CB3035 |
| R114 | 315-0303-00 | | | RES.,FXD,CMPSN:30K OHM,5%,0.25W | 01121 | CB3035 |
| R115 | 315-0681-00 | | | RES.,FXD,CMPSN:680 OHM,5%,0.25W | 01121 | CB6815 |
| R116 | 315-0203-00 | | | RES.,FXD,CMPSN:20K OHM,5%,0.25W | 01121 | CB2035 |
| R117 | 315-0473-00 | | | RES.,FXD,CMPSN:47K OHM,5%,0.25W | 01121 | CB4735 |
| R164 | 315-0102-00 | | | RES.,FXD,CMPSN:1K OHM,5%,0.25W | 01121 | CB1025 |
| R165 | 315-0475-00 | | | RES.,FXD,CMPSN:4.7M OHM,5%,0.25W | 01121 | CB4755 |
| R170 | 308-0244-00 | | | RES.,FXD,WW:0.3 OHM,10%,2W | 91637 | RS2B162ER3000K |
| R231 | 315-0472-00 | | | RES.,FXD,CMPSN:4.7K OHM,5%,0.25W | 01121 | CB4725 |
| R247 | 315-0472-00 | | | RES.,FXD,CMPSN:4.7K OHM,5%,0.25W | 01121 | CB4725 |
| R263 | 315-0303-00 | | | RES.,FXD,CMPSN:30K OHM,5%,0.25W | 01121 | CB3035 |
| R264 | 315-0472-00 | | | RES.,FXD,CMPSN:4.7K OHM,5%,0.25W | 01121 | CB4725 |

| Ckt No. | Tektronix Part No. | Serial/Model No. Eff | Dscont | Name & Description | Mfr Code | Mfr Part Number |
|---|---|---|---|---|---|---|
| R266 | 321-1296-03 | | | RES.,FXD,FILM:12K OHM,0.25%,0.125W | 91637 | MFF1816D12001C |
| R268 | 315-0102-00 | | | RES.,FXD,CMPSN:1K OHM,5%,0.25W | 01121 | CB1025 |
| R269 | 315-0470-03 | | | RES.,FXD,CMPSN:47 OHM,5%,0.25W | 01121 | CB4705 |
| R284 | 305-0104-00 | | | RES.,FXD,CMPSN:100K OHM,5%,2W | 01121 | HB1045 |
| R317 | 315-0102-00 | | | RES.,FXD,CMPSN:1K OHM,5%,0.25W | 01121 | CB1025 |
| R347 | 315-0472-00 | | | RES.,FXD,CMPSN:4.7K OHM,5%,0.25W | 01121 | CB4725 |
| R359 | 315-0302-00 | | | RES.,FXD,CMPSN:3K OHM,5%,0.25W | 01121 | CB3025 |
| R360 | 315-0103-00 | | | RES.,FXD,CMPSN:10K OHM,5%,0.25W | 01121 | CB1035 |
| R361 | 315-0432-00 | | | RES.,FXD,CMPSN:4.3K OHM,5%,0.25W | 01121 | CB4325 |
| R362 | 315-0472-00 | | | RES.,FXD,CMPSN:4.7K OHM,5%,0.25W | 01121 | CB4725 |
| R363 | 315-0471-00 | | | RES.,FXD,CMPSN:470 OHM,5%,0.25W | 01121 | CB4715 |
| R364 | 315-0472-00 | | | RES.,FXD,CMPSN:4.7K OHM,5%,0.25W | 01121 | CB4725 |
| R365 | 315-0471-00 | | | RES.,FXD,CMPSN:470 OHM,5%,0.25W | 01121 | CB4715 |
| R367 | 321-0603-00 | | | RES.,FXD,FILM:15K OHM,0.25%,0.125W | 91637 | MFF1816D15001C |
| R371 | 315-0103-00 | | | RES.,FXD,CMPSN:10K OHM,5%,0.25W | 01121 | CB1035 |
| R372 | 315-0332-00 | | | RES.,FXD,CMPSN:3.3K OHM,5%,0.25W | 01121 | CB3325 |
| R374 | 315-0202-00 | | | RES.,FXD,CMPSN:2K OHM,5%,0.25W | 01121 | CB2025 |
| R399 | 308-0429-00 | | | RES.,FXD,WW:22K OHM,1%,3W | 91637 | RS2B-B22001F |
| R443 | 315-0472-00 | | | RES.,FXD,CMPSN:4.7K OHM,5%,0.25W | 01121 | CB4725 |
| R444 | 315-0472-00 | | | RES.,FXD,CMPSN:4.7K OHM,5%,0.25W | 01121 | CB4725 |
| R445 | 315-0472-00 | | | RES.,FXD,CMPSN:4.7K OHM,5%,0.25W | 01121 | CB4725 |
| R457 | 315-0222-00 | | | RES.,FXD,CMPSN:2.2K OHM,5%,0.25W | 01121 | CB2225 |
| R465 | 315-0471-00 | | | RES.,FXD,CMPSN:470 OHM,5%,0.25W | 01121 | CB4715 |
| R468 | 315-0682-00 | | | RES.,FXD,CMPSN:6.8K OHM,5%,0.25W | 01121 | CB6825 |
| R469 | 315-0332-00 | | | RES.,FXD,CMPSN:3.3K OHM,5%,0.25W | 01121 | CB3325 |
| R470 | 315-0101-03 | | | RES.,FXD,CMPSN:100 OHM,5%,0.25W | 01121 | CB1015 |
| R471 | 308-0741-00 | | | RES.,FXD,WW:2.6 OHM,5%,0.50W | 80009 | 308-0741-00 |
| R503 | 322-0694-00 | | | RES.,FXD,FILM:517K OHM,1%,0.25W | 91637 | MFF1421G51702F |
| R504 | 322-0695-00 | | | RES.,FXD,FILM:258K OHM,1%,0.25W | 91637 | MFF1421G25802F |
| R505 | 322-0696-00 | | | RES.,FXD,FILM:129K OHM,1%,0.25W | 91637 | MFF1421G12902F |
| R506 | 322-0697-02 | | | RES.,FXD,FILM:64.37K OHM,0.5%,0.25W | 91637 | MFF1421D64371D |
| R507 | 315-0205-00 | | | RES.,FXD,CMPSN:2M OHM,5%,0.25W | 01121 | CB2055 |
| R508 | 315-0105-00 | | | RES.,FXD,CMPSN:1M OHM,5%,0.25W | 01121 | CB1055 |
| R517 | 321-0440-00 | | | RES.,FXD,FILM:374K OHM,1%,0.125W | 91637 | MFF1816G37402F |
| R518 | 321-0411-00 | | | RES.,FXD,FILM:187K OHM,1%,0.125W | 91637 | MFF1816G18702F |
| R519 | 321-0382-00 | | | RES.,FXD,FILM:93.1K OHM,1%,0.125W | 91637 | MFF1816G93101F |
| R520 | 308-0697-00 | | | RES.,FXD,WW:32.14K OHM,1%,0.125W | 91637 | WWP2258032141B |
| R521 | 308-0698-00 | | | RES.,FXD,WW:16.046K OHM,0.1%,0.125W | 91637 | WWP22580-16.046K |
| R522 | 308-0699-00 | | | RES.,FXD,WW:8.115K OHM,0.1%,0.125W | 05347 | 203PA-80111A |
| R523 | 308-0697-00 | | | RES.,FXD,WW:32.14K OHM,1%,0.125W | 91637 | WWP2258032141B |
| R543 | 315-0472-00 | | | RES.,FXD,CMPSN:4.7K OHM,5%,0.25W | 01121 | CB4725 |
| R544 | 315-0472-00 | | | RES.,FXD,CMPSN:4.7K OHM,5%,0.25W | 01121 | CB4725 |
| R545 | 315-0472-00 | | | RES.,FXD,CMPSN:4.7K OHM,5%,0.25W | 01121 | CB4725 |
| R560 | 315-0472-00 | | | RES.,FXD,CMPSN:4.7K OHM,5%,0.25W | 01121 | CB4725 |
| R561 | 315-0472-00 | | | RES.,FXD,CMPSN:4.7K OHM,5%,0.25W | 01121 | CB4725 |
| R601 | 315-0683-00 | | | RES.,FXD,CMPSN:68K OHM,5%,0.25W | 01121 | CB6835 |
| R602 | 315-0472-00 | | | RES.,FXD,CMPSN:4.7K OHM,5%,0.25W | 01121 | CB4725 |
| R603 | 321-0374-00 | | | RES.,FXD,FILM:76.8K OHM,1%,0.125W | 91637 | MFF1816G76801F |
| R604 | 321-0374-00 | | | RES.,FXD,FILM:76.8K OHM,1%,0.125W | 91637 | MFF1816G76801F |
| R605 | 321-0416-00 | | | RES.,FXD,FILM:210K OHM,1%,0.125W | 91637 | MFF1816G21002F |
| R606 | 315-0396-00 | | | RES.,FXD,CMPSN:39M OHM,5%,0.25W | 01121 | CB3965 |
| R609 | 321-0230-00 | | | RES.,FXD,FILM:2.43K OHM,1%,0.125W | 91637 | MFF1816G24300F |
| R620 | 308-0658-00 | | | RES.,FXD,WW:4K OHM,0.01%,0.125W | 91637 | WWP225-A40000L |

| Ckt No. | Tektronix Part No. | Serial/Model No. Eff | Dscont | Name & Description | Mfr Code | Mfr Part Number |
|---|---|---|---|---|---|---|
| R621 | 308-0699-00 | | | RES.,FXD,WW:8.115K OHM,0.1%,0.125W | 05347 | 203PA-80111A |
| R622 | 308-0658-00 | | | RES.,FXD,WW:4K OHM,0.01%,0.125W | 91637 | WWP225-A40000L |
| R623 | 308-0698-00 | | | RES.,FXD,WW:16.046K OHM,0.1%,0.125W | 91637 | WWP22580-16.046K |
| R627 | 322-0697-02 | | | RES.,FXD,FILM:64.37K OHM,0.5%,0.25W | 91637 | MFF1421D64371D |
| R628 | 322-0696-00 | | | RES.,FXD,FILM:129K OHM,1%,0.25W | 91637 | MFF1421G12902F |
| R629 | 322-0695-00 | | | RES.,FXD,FILM:258K OHM,1%,0.25W | 91637 | MFF1421G25802F |
| R630 | 322-0694-00 | | | RES.,FXD,FILM:517K OHM,1%,0.25W | 91637 | MFF1421G51702F |
| R631 | 315-0205-00 | | | RES.,FXD,CMPSN:2M OHM,5%,0.25W | 01121 | CB2055 |
| R632 | 315-0105-00 | | | RES.,FXD,CMPSN:1M OHM,5%,0.25W | 01121 | CB1055 |
| R633 | 315-0102-00 | | | RES.,FXD,CMPSN:1K OHM,5%,0.25W | 01121 | CB1025 |
| R634 | 315-0122-00 | | | RES.,FXD,CMPSN:1.2K OHM,5%,0.25W | 01121 | CB1225 |
| R635 | 315-0242-00 | | | RES.,FXD,CMPSN:2.4K OHM,5%,0.25W | 01121 | CB2425 |
| R636 | 315-0272-00 | | | RES.,FXD,CMPSN:2.7K OHM,5%,0.25W | 01121 | CB2725 |
| R637 | 315-0122-00 | | | RES.,FXD,CMPSN:1.2K OHM,5%,0.25W | 01121 | CB1225 |
| R638 | 315-0242-00 | | | RES.,FXD,CMPSN:2.4K OHM,5%,0.25W | 01121 | CB2425 |
| R704 | 321-0374-00 | | | RES.,FXD,FILM:76.8K OHM,1%,0.125W | 91637 | MFF1816G76801F |
| R705 | 321-0374-00 | | | RES.,FXD,FILM:76.8K OHM,1%,0.125W | 91637 | MFF1816G76801F |
| R706 | 321-0416-00 | | | RES.,FXD,FILM:210K OHM,1%,0.125W | 91637 | MFF1816G21002F |
| R707 | 315-0396-00 | | | RES.,FXD,CMPSN:39M OHM,5%,0.25W | 01121 | CB3965 |
| R708 | 321-0204-00 | | | RES.,FXD,FILM:1.3K OHM,1%,0.125W | 91637 | MFF1816G13000F |
| R709 | 321-0306-00 | | | RES.,FXD,FILM:15K OHM,1%,0.125W | 91637 | MFF1816G15001F |
| R710 | 315-0100-02 | | | RES.,FXD,CMPSN:10 OHM,5%,0.25W | 01121 | CB1005 |
| R711 | 315-0100-02 | | | RES.,FXD,CMPSN:10 OHM,5%,0.25W | 01121 | CB1005 |
| R712 | 321-0256-00 | | | RES.,FXD,FILM:4.53K OHM,1%,0.125W | 91637 | MFF1816G45300F |
| R716 | 321-0242-00 | | | RES.,FXD,FILM:3.24K OHM,1%,0.125W | 91637 | MFF1816G32400F |
| R717 | 321-0243-00 | | | RES.,FXD,FILM:3.32K OHM,1%,0.125W | 91637 | MFF1816G33200F |
| R725 | 321-0371-00 | | | RES.,FXD,FILM:71.5K OHM,1%,0.125W | 91637 | MFF1816G71501F |
| R726 | 321-0401-00 | | | RES.,FXD,FILM:147K OHM,1%,0.125W | 91637 | MFF1816G14702F |
| R727 | 321-0430-00 | | | RES.,FXD,FILM:294K OHM,1%,0.125W | 91637 | MFF1816G29402F |
| U55 | 156-0617-00 | | | MICROCIRCUIT,DI:DUAL 4 BIT BIN COUNTER | 01295 | SN74393N |
| U61 | 156-0617-00 | | | MICROCIRCUIT,DI:DUAL 4 BIT BIN COUNTER | 01295 | SN74393N |
| U81 | 156-0071-00 | | | MICROCIRCUIT,LI:VOLTAGE REGULATOR | 07263 | 723DC |
| U101 | 156-0706-00 | | | MICROCIRCUIT,DI:DUAL MONOSTABLE MV | 01295 | SN74221N |
| U121 | 156-0030-00 | | | MICROCIRCUIT,DI:QUAD 2-INPUT POS NAND GATE | 01295 | SN7400N |
| U125 | 156-0129-00 | | | MICROCIRCUIT,DI:QUAD 2-INPUT GATE | 01295 | SN7408N |
| U131 | 156-0030-00 | | | MICROCIRCUIT,DI:QUAD 2-INPUT POS NAND GATE | 01295 | SN7400N |
| U135 | 156-0075-00 | | | MICROCIRCUIT,DI:SGL 8-BIT DATA SEL MUX | 80009 | 156-0075-00 |
| U141 | 156-0147-00 | | | MICROCIRCUIT,DI:ROM 64 X 5 X 7 CHAR GEN | 80009 | 156-0147-00 |
| U151 | 156-0536-00 | | | MICROCIRCUIT,DI:PRESETTABLE DECADE/BIN CNTR | 01295 | SN74177N |
| U155 | 156-0047-00 | | | MICROCIRCUIT,DI:TPL 3-INPUT POS NAND GATE | 80009 | 156-0047-00 |
| U161 | 156-0172-00 | | | MICROCIRCUIT,DI:DUAL RETRIG MONOSTABLE MV | 80009 | 156-0172-00 |
| U201 | 156-0129-00 | | | MICROCIRCUIT,DI:QUAD 2-INPUT GATE | 01295 | SN7408N |
| U211 | 156-0039-00 | | | MICROCIRCUIT,DI:DUAL J-K FLIP FLOP | 01295 | SN7473N |
| U215 | 156-0041-00 | | | MICROCIRCUIT,DI:DUAL D-TYPE FLIP-FLOP | 27014 | DM7474N |
| U221 | 156-0129-00 | | | MICROCIRCUIT,DI:QUAD 2-INPUT GATE | 01295 | SN7408N |
| U225 | 156-0030-00 | | | MICROCIRCUIT,DI:QUAD 2-INPUT POS NAND GATE | 01295 | SN7400N |
| U231 | 156-0047-00 | | | MICROCIRCUIT,DI:TPL 3-INPUT POS NAND GATE | 80009 | 156-0047-00 |
| U235 | 156-0141-00 | | | MICROCIRCUIT,DI:DUAL 2 TO 4 LINE DCDR/DMUX | 01295 | SN74156N |
| U245 | 156-0058-00 | | | MICROCIRCUIT,DI:HEX.INVERTER | 01295 | SN7404N |
| U251 | 156-0058-00 | | | MICROCIRCUIT,DI:HEX.INVERTER | 01295 | SN7404N |
| U255 | 156-0041-00 | | | MICROCIRCUIT,DI:DUAL D-TYPE FLIP-FLOP | 27014 | DM7474N |
| U261 | 156-0117-00 | | | MICROCIRCUIT,DI:SYNC 4-BIT BINARY COUNTER | 01295 | SN74161N |
| U301 | 156-0041-00 | | | MICROCIRCUIT,DI:DUAL D-TYPE FLIP-FLOP | 27014 | DM7474N |

| Ckt No. | Tektronix Part No. | Serial/Model No. Eff | Dscont | Name & Description | Mfr Code | Mfr Part Number |
|---|---|---|---|---|---|---|
| U311 | 156-0536-00 | | | MICROCIRCUIT,DI:PRESETTABLE DECADE/BIN CNTR | 01295 | SN74177N |
| U315 | 156-0047-00 | | | MICROCIRCUIT,DI:TPL 3-INPUT POS NAND GATE | 80009 | 156-0047-00 |
| U321 | 156-0037-00 | | | MICROCIRCUIT,DI:2-INPUT +AND/OR/INVERT GATE | 80009 | 156-0037-00 |
| U325 | 156-0043-00 | | | MICROCIRCUIT,DI:QUAD 2-INPUT POS NOR GATE | 80009 | 156-0043-00 |
| U331 | 156-0129-00 | | | MICROCIRCUIT,DI:QUAD 2-INPUT GATE | 01295 | SN7408N |
| U335 | 156-0030-00 | | | MICROCIRCUIT,DI:QUAD 2-INPUT POS NAND GATE | 01295 | SN7400N |
| U341 | 156-0078-00 | | | MICROCIRCUIT,DI:4 TO 16 LINE DECODER | 01295 | SN74154N |
| U345 | 156-0035-00 | | | MICROCIRCUIT,DI:SGL 8-INPUT POS NAND GATE | 80009 | 156-0035-00 |
| U351 | 156-0473-00 | | | MICROCIRCUIT,DI:DUAL 5-INPUT NAND GATE TTL | 27014 | DM8092N |
| U355 | 156-0039-00 | | | MICROCIRCUIT,DI:DUAL J-K FLIP FLOP | 01295 | SN7473N |
| U375 | 156-0158-00 | | | MICROCIRCUIT,LI:DUAL OPERATIONAL AMPLIFIER | 80009 | 156-0158-00 |
| U401 | 156-0040-00 | | | MICROCIRCUIT,DI:QUAD LATCH,TTL | 80009 | 156-0040-00 |
| U411 | 156-0536-00 | | | MICROCIRCUIT,DI:PRESETTABLE DECADE/BIN CNTR | 01295 | SN74177N |
| U415 | 156-0536-00 | | | MICROCIRCUIT,DI:PRESETTABLE DECADE/BIN CNTR | 01295 | SN74177N |
| U421 | 156-0536-00 | | | MICROCIRCUIT,DI:PRESETTABLE DECADE/BIN CNTR | 01295 | SN74177N |
| U425 | 156-0536-00 | | | MICROCIRCUIT,DI:PRESETTABLE DECADE/BIN CNTR | 01295 | SN74177N |
| U431 | 156-0536-00 | | | MICROCIRCUIT,DI:PRESETTABLE DECADE/BIN CNTR | 01295 | SN74177N |
| U435 | 156-0536-00 | | | MICROCIRCUIT,DI:PRESETTABLE DECADE/BIN CNTR | 01295 | SN74177N |
| U441 | 156-0152-00 | | | MICROCIRCUIT,DI:DUAL 5-BIT BUFFER-REG | 18324 | N8201N |
| U451 | 156-0129-00 | | | MICROCIRCUIT,DI:QUAD 2-INPUT GATE | 01295 | SN7408N |
| U455 | 156-0361-00 | | | MICROCIRCUIT,DI:UNIV A SYN RCVR XMTR | 14939 | AY-5-1013 |
| U525 | 307-1054-00 | | | RES.,NETWORK,TF:DIGITAL ANALOG CONVERTER | 80009 | 307-1054-00 |
| U551 | 156-0129-00 | | | MICROCIRCUIT,DI:QUAD 2-INPUT GATE | 01295 | SN7408N |
| U605 | 156-0158-00 | | | MICROCIRCUIT,LI:DUAL OPERATIONAL AMPLIFIER | 80009 | 156-0158-00 |
| U611 | 156-0106-00 | | | MICROCIRCUIT,LI:MONOLITHIC,6-DIODE ARRAY | 86684 | CA3039 |
| U615 | 156-0106-00 | | | MICROCIRCUIT,LI:MONOLITHIC,6-DIODE ARRAY | 86684 | CA3039 |
| U715 | 156-0158-00 | | | MICROCIRCUIT,LI:DUAL OPERATIONAL AMPLIFIER | 80009 | 156-0158-00 |
| U721 | 156-0106-00 | | | MICROCIRCUIT,LI:MONOLITHIC,6-DIODE ARRAY | 86684 | CA3039 |
| U725 | 156-0106-00 | | | MICROCIRCUIT,LI:MONOLITHIC,6-DIODE ARRAY | 86684 | CA3039 |
| VR90 | 152-0195-00 | | | SEMICOND DEVICE:ZENER,0.4W,5.1V,5% | 80009 | 152-0195-00 |
| VR267 | 152-0166-00 | | | SEMICOND DEVICE:ZENER,0.4W,6.2V,5% | 81483 | 69-9035 |
| VR441 | 152-0638-00 | | | SEMICOND DEVICE:ZENER,0.4W,7V,5% | 04713 | SCG98 |
| Y144 | 158-0072-00 | | | XTAL UNIT,QTZ:4.9152 MHZ,0.05% | 80009 | 158-0072-00 |

A2 DISPLAY W/HEAT SINK

| | | | | | | |
|---|---|---|---|---|---|---|
| C11 | 283-0033-00 | | | CAP.,FXD,CER DI:0.001UF,6000V | 72982 | 3906BW200E102P |
| C12 | 283-0101-00 | | | CAP.,FXD,CER DI:4700PF,+80-20%,6000V | 56289 | 45C11A |
| C23 | 283-0008-00 | | | CAP.,FXD,CER DI:0.1UF,500V | 56289 | 275C8 |
| C25 | 283-0008-00 | | | CAP.,FXD,CER DI:0.1UF,500V | 56289 | 275C8 |
| C29 | 281-0523-00 | | | CAP.,FXD,CER DI:100PF,+/-20PF,500V | 72982 | 301-000U2M0101M |
| C44 | 283-0068-00 | | | CAP.,FXD,CER DI:0.01UF,+100-0%,500V | 56289 | 19C241 |
| C62 | 281-0550-00 | | | CAP.,FXD,CER DI:120PF,10%,500V | 04222 | 7001-1373 |
| C64 | 283-0068-00 | | | CAP.,FXD,CER DI:0.01UF,+100-0%,500V | 56289 | 19C241 |
| C86 | 283-0092-00 | | | CAP.,FXD,CER DI:0.03UF,+80-20%,200V | 72982 | 845-534E303Z |
| C96 | 283-0092-00 | | | CAP.,FXD,CER DI:0.03UF,+80-20%,200V | 72982 | 845-534E303Z |

| Ckt No. | Tektronix Part No. | Serial/Model No. Eff | Dscont | Name & Description | Mfr Code | Mfr Part Number |
|---|---|---|---|---|---|---|
| C110 | 283-0101-00 | | | CAP.,FXD,CER DI:4700PF,+80-20%,6000V | 56289 | 45C11A |
| C113 | 283-0101-00 | | | CAP.,FXD,CER DI:4700PF,+80-20%,6000V | 56289 | 45C11A |
| C136 | 283-0008-00 | | | CAP.,FXD,CER DI:0.1UF,500V | 56289 | 275C8 |
| C147 | 283-0068-00 | | | CAP.,FXD,CER DI:0.01UF,+100-0%,500V | 56289 | 19C241 |
| C148 | 281-0523-00 | | | CAP.,FXD,CER DI:100PF,+/-20PF,500V | 72982 | 301-000U2M0101M |
| C151 | 283-0177-00 | | | CAP.,FXD,CER DI:1UF,+80-20%,25V | 72982 | 8131N039 E 105Z |
| C158 | 283-0008-00 | | | CAP.,FXD,CER DI:0.1UF,500V | 56289 | 275C8 |
| C159 | 283-0008-00 | | | CAP.,FXD,CER DI:0.1UF,500V | 56289 | 275C8 |
| C175 | 281-0605-00 | | | CAP.,FXD,CER DI:200PF,10%,500V | 04222 | 7001-1375 |
| C177 | 281-0605-00 | | | CAP.,FXD,CER DI:200PF,10%,500V | 04222 | 7001-1375 |
| C189 | 283-0068-00 | | | CAP.,FXD,CER DI:0.01UF,+100-0%,500V | 56289 | 19C241 |
| C190 | 283-0068-00 | | | CAP.,FXD,CER DI:0.01UF,+100-0%,500V | 56289 | 19C241 |
| C196 | 290-0525-00 | | | CAP.,FXD,ELCTLT:4.7UF,20%,50V | 56289 | 196D475X0050KA1 |
| C213 | 283-0291-00 | | | CAP.,FXD,CER DI:25PF,10%,6000V | 56289 | 41C426 |
| C214 | 283-0162-00 | | | CAP.,FXD,CER DI:0.01UF,+80-30%,5000V | 56289 | 112C403 |
| C215 | 283-0101-00 | | | CAP.,FXD,CER DI:4700PF,+80-20%,6000V | 56289 | 45C11A |
| C222 | 283-0177-00 | | | CAP.,FXD,CER DI:1UF,+80-20%,25V | 72982 | 8131N039 E 105Z |
| C228 | 283-0068-00 | | | CAP.,FXD,CER DI:0.01UF,+100-0%,500V | 56289 | 19C241 |
| C232 | 283-0068-00 | | | CAP.,FXD,CER DI:0.01UF,+100-0%,500V | 56289 | 19C241 |
| C243 | 283-0000-00 | | | CAP.,FXD,CER DI:0.001UF,+100-0%,500V | 72982 | 831-516E102P |
| C244 | 283-0068-00 | | | CAP.,FXD,CER DI:0.01UF,+100-0%,500V | 56289 | 19C241 |
| C255 | 281-0623-00 | | | CAP.,FXD,CER DI:650PF,5%,500V | 04222 | 7001-1362 |
| C257 | 281-0623-00 | | | CAP.,FXD,CER DI:650PF,5%,500V | 04222 | 7001-1362 |
| C258 | 283-0177-00 | | | CAP.,FXD,CER DI:1UF,+80-20%,25V | 72982 | 8131N039 E 105Z |
| C259 | 283-0177-00 | | | CAP.,FXD,CER DI:1UF,+80-20%,25V | 72982 | 8131N039 E 105Z |
| C286 | 281-0605-00 | | | CAP.,FXD,CER DI:200PF,10%,500V | 04222 | 7001-1375 |
| C291 | 281-0605-00 | | | CAP.,FXD,CER DI:200PF,10%,500V | 04222 | 7001-1375 |
| C311 | 283-0021-00 | | | CAP.,FXD,CER DI:0.001UF,20%,5000V | 72982 | 848-556-Y5S-102M |
| C312 | 283-0021-00 | | | CAP.,FXD,CER DI:0.001UF,20%,5000V | 72982 | 848-556-Y5S-102M |
| C325 | 283-0067-00 | | | CAP.,FXD,CER DI:0.001UF,10%,200V | 72982 | 835-515B102K |
| C333 | 281-0525-00 | | | CAP.,FXD,CER DI:470PF,+/-94PF,500V | 04222 | 7001-1364 |
| C334 | 283-0177-00 | | | CAP.,FXD,CER DI:1UF,+80-20%,25V | 72982 | 8131N039 E 105Z |
| C342 | 281-0504-00 | | | CAP.,FXD,CER DI:10PF,+/-1PF,500V | 72982 | 301-055C0G0100F |
| C343 | 281-0604-00 | | | CAP.,FXD,CER DI:2.2PF,+/-0.25PF,500V | 72982 | 301-000C0J0229C |
| C353 | 290-0301-00 | | | CAP.,FXD,ELCTLT:10UF,10%,20V | 56289 | 150D106X9020B2 |
| C363 | 283-0000-00 | | | CAP.,FXD,CER DI:0.001UF,+100-0%,500V | 72982 | 831-516E102P |
| C364 | 283-0000-00 | | | CAP.,FXD,CER DI:0.001UF,+100-0%,500V | 72982 | 831-516E102P |
| C370 | 290-0260-00 | | | CAP.,FXD,ELCTLT:50UF,+75-10%,200V | 56289 | 34D506G200GL4 |
| C427 | 283-0067-00 | | | CAP.,FXD,CER DI:0.001UF,10%,200V | 72982 | 835-515B102K |
| C432 | 283-0177-00 | | | CAP.,FXD,CER DI:1UF,+80-20%,25V | 72982 | 8131N039 E 105Z |
| C435 | 290-0316-00 | | | CAP.,FXD,ELCTLT:47UF,20%,35V | 56289 | 150D476X0035S2 |
| C437 | 283-0111-00 | | | CAP.,FXD,CER DI:0.1UF,20%,50V | 72982 | 8121-N088Z5U104M |
| C439 | 283-0111-00 | | | CAP.,FXD,CER DI:0.1UF,20%,50V | 72982 | 8121-N088Z5U104M |
| C459 | 290-0534-00 | | | CAP.,FXD,ELCTLT:1UF,20%,35V | 56289 | 196D105X0035HA1 |
| C466 | 281-0549-00 | | | CAP.,FXD,CER DI:68PF,10%,500V | 72982 | 301-000U2J0680K |
| C468 | 290-0297-00 | | | CAP.,FXD,ELCTLT:39UF,10%,10V | 56289 | 150D396X9010B2 |
| C545 | 283-0081-00 | | | CAP.,FXD,CER DI:0.1UF,+80-20%,25V | 56289 | 36C600 |
| C650 | 283-0177-00 | | | CAP.,FXD,CER DI:1UF,+80-20%,25V | 72982 | 8131N039 E 105Z |
| C659 | 281-0622-00 | | | CAP.,FXD,CER DI:47PF,1%,500V | 72982 | 308-000C0G0470F |
| C664 | 283-0000-00 | | | CAP.,FXD,CER DI:0.001UF,+100-0%,500V | 72982 | 831-516E102P |
| C668 | 290-0517-00 | | | CAP.,FXD,ELCTLT:6.8UF,20%,35V | 56289 | 196D685X0035KA1 |
| C669 | 290-0517-00 | | | CAP.,FXD,ELCTLT:6.8UF,20%,35V | 56289 | 196D685X0035KA1 |
| C671 | 290-0536-00 | | | CAP.,FXD,ELCTLT:10UF,20%,25V | 90201 | TDC106M025FL |

| Ckt No. | Tektronix Part No. | Serial/Model No. Eff | Dscont | Name & Description | Mfr Code | Mfr Part Number |
|---|---|---|---|---|---|---|
| C672 | 290-0536-00 | | | CAP.,FXD,ELCTLT:10UF,20%,25V | 90201 | TDC106M025FL |
| CR4 | 152-0426-00 | | | SEMICOND DEVICE:SILICON,400V,400MA | 01295 | G2017-1 |
| CR20 | 152-0426-00 | | | SEMICOND DEVICE:SILICON,400V,400MA | 01295 | G2017-1 |
| CR21 | 152-0061-00 | | | SEMICOND DEVICE:SILICON,175V,100MA | 80009 | 152-0061-00 |
| CR22 | 152-0061-00 | | | SEMICOND DEVICE:SILICON,175V,100MA | 80009 | 152-0061-00 |
| CR23 | 152-0066-01 | | | SEMICOND DEVICE:SILICON,400V,1A | 80009 | 152-0066-01 |
| CR24 | 152-0400-00 | | | SEMICOND DEVICE:SILICON,400V,1A | 80009 | 152-0400-00 |
| CR40[1] | 152-0066-01 | | | SEMICOND DEVICE:SILICON,400V,1A | 80009 | 152-0066-01 |
| CR45 | 152-0141-02 | | | SEMICOND DEVICE:SILICON,30V,150MA | 07910 | 1N4152 |
| CR59 | 152-0141-02 | | | SEMICOND DEVICE:SILICON,30V,150MA | 07910 | 1N4152 |
| CR67 | 152-0141-02 | | | SEMICOND DEVICE:SILICON,30V,150MA | 07910 | 1N4152 |
| CR81 | 152-0141-02 | | | SEMICOND DEVICE:SILICON,30V,150MA | 07910 | 1N4152 |
| CR82 | 152-0141-02 | | | SEMICOND DEVICE:SILICON,30V,150MA | 07910 | 1N4152 |
| CR91 | 152-0141-02 | | | SEMICOND DEVICE:SILICON,30V,150MA | 07910 | 1N4152 |
| CR92 | 152-0141-02 | | | SEMICOND DEVICE:SILICON,30V,150MA | 07910 | 1N4152 |
| CR103 | 152-0426-00 | | | SEMICOND DEVICE:SILICON,400V,400MA | 01295 | G2017-1 |
| CR121 | 152-0061-00 | | | SEMICOND DEVICE:SILICON,175V,100MA | 80009 | 152-0061-00 |
| CR122 | 152-0141-02 | | | SEMICOND DEVICE:SILICON,30V,150MA | 07910 | 1N4152 |
| CR128 | 152-0066-01 | | | SEMICOND DEVICE:SILICON,400V,1A | 80009 | 152-0066-01 |
| CR169 | 152-0040-00 | | | SEMICOND DEVICE:SILICON,600V,1A | 80009 | 152-0040-00 |
| CR203 | 152-0408-00 | | | SEMICOND DEVICE:SILICON,10KV,5MA | 83003 | H345 |
| CR204 | 152-0408-00 | | | SEMICOND DEVICE:SILICON,10KV,5MA | 83003 | H345 |
| CR264 | 152-0107-00 | | | SEMICOND DEVICE:SILICON,400V,400MA | 80009 | 152-0107-00 |
| CR311 | 152-0429-00 | | | SEMICOND DEVICE:SILICON,5000V,10MA | 14099 | SA3282 |
| CR312 | 152-0429-00 | | | SEMICOND DEVICE:SILICON,5000V,10MA | 14099 | SA3282 |
| CR327 | 152-0141-02 | | | SEMICOND DEVICE:SILICON,30V,150MA | 07910 | 1N4152 |
| CR328 | 152-0141-02 | | | SEMICOND DEVICE:SILICON,30V,150MA | 07910 | 1N4152 |
| CR350 | 152-0141-02 | | | SEMICOND DEVICE:SILICON,30V,150MA | 07910 | 1N4152 |
| CR395 | 152-0141-02 | | | SEMICOND DEVICE:SILICON,30V,150MA | 07910 | 1N4152 |
| CR396 | 152-0141-02 | | | SEMICOND DEVICE:SILICON,30V,150MA | 07910 | 1N4152 |
| CR397 | 152-0141-02 | | | SEMICOND DEVICE:SILICON,30V,150MA | 07910 | 1N4152 |
| CR398 | 152-0141-02 | | | SEMICOND DEVICE:SILICON,30V,150MA | 07910 | 1N4152 |
| CR429 | 152-0412-00 | | | SEMICOND DEVICE:SILICON,50V,3A | 80009 | 152-0412-00 |
| CR432 | 152-0333-00 | | | SEMICOND DEVICE:SILICON,55V,200MA | 80009 | 152-0333-00 |
| CR450 | 152-0141-02 | | | SEMICOND DEVICE:SILICON,30V,150MA | 07910 | 1N4152 |
| CR475 | 152-0141-02 | | | SEMICOND DEVICE:SILICON,30V,150MA | 07910 | 1N4152 |
| CR476 | 152-0141-02 | | | SEMICOND DEVICE:SILICON,30V,150MA | 07910 | 1N4152 |
| CR497 | 152-0141-02 | | | SEMICOND DEVICE:SILICON,30V,150MA | 07910 | 1N4152 |
| CR575 | 152-0141-02 | | | SEMICOND DEVICE:SILICON,30V,150MA | 07910 | 1N4152 |
| CR586 | 152-0141-02 | | | SEMICOND DEVICE:SILICON,30V,150MA | 07910 | 1N4152 |
| CR593 | 152-0141-02 | | | SEMICOND DEVICE:SILICON,30V,150MA | 07910 | 1N4152 |
| CR596 | 152-0141-02 | | | SEMICOND DEVICE:SILICON,30V,150MA | 07910 | 1N4152 |
| CR597 | 152-0141-02 | | | SEMICOND DEVICE:SILICON,30V,150MA | 07910 | 1N4152 |
| CR677 | 152-0141-02 | | | SEMICOND DEVICE:SILICON,30V,150MA | 07910 | 1N4152 |
| CR678 | 152-0141-02 | | | SEMICOND DEVICE:SILICON,30V,150MA | 07910 | 1N4152 |
| CR775 | 152-0141-02 | | | SEMICOND DEVICE:SILICON,30V,150MA | 07910 | 1N4152 |
| CR781 | 152-0141-02 | | | SEMICOND DEVICE:SILICON,30V,150MA | 07910 | 1N4152 |
| DS1 | 150-0035-00 | | | LAMP,GLOW:90V,0.3MA | 08806 | A1D-T |
| DS2 | 150-0035-00 | | | LAMP,GLOW:90V,0.3MA | 08806 | A1D-T |
| DS3 | 150-0035-00 | | | LAMP,GLOW:90V,0.3MA | 08806 | A1D-T |
| DS4 | 150-0035-00 | | | LAMP,GLOW:90V,0.3MA | 08806 | A1D-T |
| DS18 | 150-0035-00 | | | LAMP,GLOW:90V,0.3MA | 08806 | A1D-T |

[1]Used on -04 suffix board only.

| Ckt No. | Tektronix Part No. | Serial/Model No. Eff | Dscont | Name & Description | Mfr Code | Mfr Part Number |
|---|---|---|---|---|---|---|
| DS27 | 150-0035-00 | | | LAMP,GLOW:90V,0.3MA | 08806 | A1D-T |
| DS28 | 150-0035-00 | | | LAMP,GLOW:90V,0.3MA | 08806 | A1D-T |
| DS31 | 150-0035-00 | | | LAMP,GLOW:90V,0.3MA | 08806 | A1D-T |
| DS103 | 150-0035-00 | | | LAMP,GLOW:90V,0.3MA | 08806 | A1D-T |
| DS104 | 150-0035-00 | | | LAMP,GLOW:90V,0.3MA | 08806 | A1D-T |
| DS108 | 150-0035-00 | | | LAMP,GLOW:90V,0.3MA | 08806 | A1D-T |
| L27 | 108-0213-00 | | | COIL,RF:2.5MH | 76493 | 8862-2.5 |
| L155 | 108-0146-00 | | | COIL,RF:5UH | 80009 | 108-0146-00 |
| L432 | 108-0234-00 | | | COIL,RF:130UH | 80009 | 108-0234-00 |
| Q29 | 151-0311-01 | | | TRANSISTOR:SILICON,NPN | 04713 | MJE340 |
| Q31 | 151-0219-00 | | | TRANSISTOR:SILICON,PNP | 80009 | 151-0219-00 |
| Q41 | 151-0150-00 | | | TRANSISTOR:SILICON,NPN | 80009 | 151-0150-00 |
| Q47 | 151-0150-00 | | | TRANSISTOR:SILICON,NPN | 80009 | 151-0150-00 |
| Q84 | 151-0134-00 | | | TRANSISTOR:SILICON,PNP | 80009 | 151-0134-00 |
| Q95 | 151-0134-00 | | | TRANSISTOR:SILICON,PNP | 80009 | 151-0134-00 |
| Q122 | 151-0279-00 | | | TRANSISTOR:SILICON,NPN | 80009 | 151-0279-00 |
| Q123 | 151-0124-00 | | | TRANSISTOR:SILICON,NPN,SEL FROM 2N3501 | 80009 | 151-0124-00 |
| Q143 | 151-0311-01 | | | TRANSISTOR:SILICON,NPN | 04713 | MJE340 |
| Q162 | 151-0219-00 | | | TRANSISTOR:SILICON,PNP | 80009 | 151-0219-00 |
| Q165 | 151-0311-01 | | | TRANSISTOR:SILICON,NPN | 04713 | MJE340 |
| Q186 | 151-0136-00 | | | TRANSISTOR:SILICON,NPN | 02735 | 35495 |
| Q193 | 151-0136-00 | | | TRANSISTOR:SILICON,NPN | 02735 | 35495 |
| Q231 | 151-0270-00 | | | TRANSISTOR:SILICON,PNP | 80009 | 151-0270-00 |
| Q244 | 151-0311-01 | | | TRANSISTOR:SILICON,NPN | 04713 | MJE340 |
| Q247 | 151-0219-00 | | | TRANSISTOR:SILICON,PNP | 80009 | 151-0219-00 |
| Q251 | 151-0219-00 | | | TRANSISTOR:SILICON,PNP | 80009 | 151-0219-00 |
| Q328 | 151-1005-00 | | | TRANSISTOR:SILICON,JFE,N-CHANNEL | 80009 | 151-1005-00 |
| Q329 | 151-0302-00 | | | TRANSISTOR:SILICON,NPN | 04713 | 2N2222A |
| Q338 | 151-0223-00 | | | TRANSISTOR:SILICON,NPN | 80009 | 151-0223-00 |
| Q354 | 151-0190-00 | | | TRANSISTOR:SILICON,NPN | 80009 | 151-0190-00 |
| Q355 | 151-0190-00 | | | TRANSISTOR:SILICON,NPN | 80009 | 151-0190-00 |
| Q361 | 151-0219-00 | | | TRANSISTOR:SILICON,PNP | 80009 | 151-0219-00 |
| Q362 | 151-0219-00 | | | TRANSISTOR:SILICON,PNP | 80009 | 151-0219-00 |
| Q364 | 151-0311-01 | | | TRANSISTOR:SILICON,NPN | 04713 | MJE340 |
| Q366 | 151-0311-01 | | | TRANSISTOR:SILICON,NPN | 04713 | MJE340 |
| Q429 | 151-0190-00 | | | TRANSISTOR:SILICON,NPN | 80009 | 151-0190-00 |
| Q432 | 151-0256-00 | | | TRANSISTOR:SILICON,NPN | 80009 | 151-0256-00 |
| ~~Q433~~ | ~~151-0334-00~~ | | | ~~TRANSISTOR:SILICON,NPN~~ | ~~80009~~ | ~~151-0334-00~~ |
| Q459[1] | 151-0219-00 | | | TRANSISTOR:SILICON,PNP | 80009 | 151-0219-00 |
| Q473 | 151-0190-00 | | | TRANSISTOR:SILICON,NPN | 80009 | 151-0190-00 |
| Q481 | 151-0353-00 | | | TRANSISTOR:SILICON,NPN | 32293 | ITS1251 |
| Q482 | 151-0353-00 | | | TRANSISTOR:SILICON,NPN | 32293 | ITS1251 |
| Q539 | 151-0347-00 | | | TRANSISTOR:SILICON,NPN | 80009 | 151-0347-00 |
| Q551 | 151-0188-00 | | | TRANSISTOR:SILICON,PNP | 01295 | 2N3906 |
| Q552 | 151-0188-00 | | | TRANSISTOR:SILICON,PNP | 01295 | 2N3906 |
| Q674 | 151-0190-00 | | | TRANSISTOR:SILICON,NPN | 80009 | 151-0190-00 |
| Q1036 | 151-0423-00 | | | TRANSISTOR:SILICON,NPN | 01295 | TIP50 |
| Q1039 | 151-0423-00 | | | TRANSISTOR:SILICON,NPN | 01295 | TIP50 |
| Q1044 | 151-0423-00 | | | TRANSISTOR:SILICON,NPN | 01295 | TIP50 |
| Q1059 | 151-0423-00 | | | TRANSISTOR:SILICON,NPN | 01295 | TIP50 |
| Q1067 | 151-0423-00 | | | TRANSISTOR:SILICON,NPN | 01295 | TIP50 |
| Q1069 | 151-0349-00 | | | TRANSISTOR:SILICON,NPN,SEL FROM MJE2801 | 80009 | 151-0349-00 |

[1]Used on -01, -02 and -03 suffix board only.

| Ckt No. | Tektronix Part No. | Serial/Model No. Eff | Dscont | Name & Description | Mfr Code | Mfr Part Number |
|---|---|---|---|---|---|---|
| Q1074 | 151-0373-00 | | | TRANSISTOR:SILICON,PNP | 80009 | 151-0373-00 |
| Q1084 | 151-0349-00 | | | TRANSISTOR:SILICON,NPN,SEL FROM MJE2801 | 80009 | 151-0349-00 |
| Q1096 | 151-0373-00 | | | TRANSISTOR:SILICON,PNP | 80009 | 151-0373-00 |
| R5 | 315-0102-03 | | | RES.,FXD,CMPSN:1K OHM,5%,0.25W | 01121 | CB1025 |
| R6 | 315-0102-03 | | | RES.,FXD,CMPSN:1K OHM,5%,0.25W | 01121 | CB1025 |
| R13 | 311-1312-00 | | | RES.,VAR,NONWIR:5M OHM,20%,1W | 01121 | 10M586 |
| R18 | 305-0125-00 | | | RES.,FXD,CMPSN:1.2M OHM,5%,2W | 01121 | HB1255 |
| R19 | 315-0222-00 | | | RES.,FXD,CMPSN:2.2K OHM,5%,0.25W | 01121 | CB2225 |
| R21 | 315-0202-00 | | | RES.,FXD,CMPSN:2K OHM,5%,0.25W | 01121 | CB2025 |
| R25 | 315-0100-02 | | | RES.,FXD,CMPSN:10 OHM,5%,0.25W | 01121 | CB1005 |
| R26 | 315-0103-03 | | | RES.,FXD,CMPSN:10K OHM,5%,0.25W | 01121 | CB1035 |
| R27 | 315-0102-00 | | | RES.,FXD,CMPSN:1K OHM,5%,0.25W | 01121 | CB1025 |
| R28 | 322-0452-00 | | | RES.,FXD,FILM:499K OHM,1%,0.25W | 91637 | MFF1421G49902F |
| R29 | ~~315-0682-00~~ | | | ~~RES.,FXD,CMPSN:6.8K OHM,5%,0.25W~~ | ~~01121~~ | ~~CB6825~~ |
| R30 | 308-0108-00 | | | RES.,FXD,WW:15K OHM,5%,5W | 91637 | RS5-B15001J |
| R31 | 315-0473-00 | | | RES.,FXD,CMPSN:47K OHM,5%,0.25W | 01121 | CB4735 |
| R32 | 315-0471-00 | | | RES.,FXD,CMPSN:470 OHM,5%,0.25W | 01121 | CB4715 |
| R33 | 321-0346-00 | | | RES.,FXD,FILM:39.2K OHM,1%,0.125W | 91637 | MFF1816G39201F |
| R34 | 321-0323-00 | | | RES.,FXD,FILM:22.6K OHM,1%,0.125W | 91637 | MFF1816G22601F |
| R35 | 321-0222-00 | | | RES.,FXD,FILM:2K OHM,1%,0.125W | 91637 | MFF1816G20000F |
| R36 | 311-1561-00 | | | RES.,VAR,NONWIR:2.5K OHM,20%,0.50W | 73138 | 91A R2500 |
| R37 | 305-0154-00 | | | RES.,FXD,CMPSN:150K OHM,5%,2W | 01121 | HB1545 |
| R38 | 315-0470-03 | | | RES.,FXD,CMPSN:47 OHM,5%,0.25W | 01121 | CB4705 |
| R39[1] | 315-0101-03 | | | RES.,FXD,CMPSN:100 OHM,5%,0.25W | 01121 | CB1015 |
| R39 | 315-0470-03 | | | RES.,FXD,CMPSN:47 OHM,5%,0.25W | 01121 | CB4750 |
| R40[2] | 315-0184-00 | | | RES.,FXD,CMPSN:180K OHM,5%,0.25W | 01121 | CB1845 |
| R41 | 305-0433-00 | | | RES.,FXD,CMPSN:43K OHM,5%,2W | 01121 | HB4335 |
| R43 | 303-0134-00 | | | RES.,FXD,CMPSN:130K OHM,5%,1W | 01121 | GB1345 |
| R44 | 303-0134-00 | | | RES.,FXD,CMPSN:130K OHM,5%,1W | 01121 | GB1345 |
| R48 | 303-0224-00 | | | RES.,FXD,CMPSN:220K OHM,5%,1W | 01121 | GB2245 |
| R59 | 315-0470-03 | | | RES.,FXD,CMPSN:47 OHM,5%,0.25W | 01121 | CB4705 |
| R61 | 315-0470-03 | | | RES.,FXD,CMPSN:47 OHM,5%,0.25W | 01121 | CB4705 |
| R64 | 305-0683-00 | | | RES.,FXD,CMPSN:68K OHM,5%,2W | 01121 | HB6835 |
| R66 | 315-0101-03 | | | RES.,FXD,CMPSN:100 OHM,5%,0.25W | 01121 | CB1015 |
| R67 | 315-0470-03 | | | RES.,FXD,CMPSN:47 OHM,5%,0.25W | 01121 | CB4705 |
| R71 | 303-0391-00 | | | RES.,FXD,CMPSN:390 OHM,5%,1W | 01121 | GB3915 |
| R74 | 307-0344-00 | | | RES.,FXD,FILM:3 SECT,1.5 OHM EA SECT | 80009 | 307-0344-00 |
| R75 | 303-0331-00 | | | RES.,FXD,CMPSN:330 OHM,5%,1W | 01121 | GB3315 |
| R86 | 315-0101-03 | | | RES.,FXD,CMPSN:100 OHM,5%,0.25W | 01121 | CB1015 |
| R97 | 315-0101-03 | | | RES.,FXD,CMPSN:100 OHM,5%,0.25W | 01121 | CB1015 |
| R104 | 301-0395-00 | | | RES.,FXD,CMPSN:3.9M OHM,5%,0.50W | 01121 | EB3955 |
| R106 | 301-0104-00 | | | RES.,FXD,CMPSN:100K OHM,5%,0.5W | 01121 | EB1045 |
| R108 | 301-0103-00 | | | RES.,FXD,CMPSN:10K OHM,5%,0.50W | 01121 | EB1035 |
| R109 | 315-0102-03 | | | RES.,FXD,CMPSN:1K OHM,5%,0.25W | 01121 | CB1025 |
| R112 | 307-0316-00 | | | RES.,FXD,FILM:15M OHM,26.8M OHM | 80009 | 307-0316-00 |
| R121 | 315-0101-03 | | | RES.,FXD,CMPSN:100 OHM,5%,0.25W | 01121 | CB1015 |
| R122 | 301-0333-00 | | | RES.,FXD,CMPSN:33K OHM,5%,0.50W | 01121 | EB3335 |
| R123 | 315-0101-03 | | | RES.,FXD,CMPSN:100 OHM,5%,0.25W | 01121 | CB1015 |
| R126 | 315-0102-00 | | | RES.,FXD,CMPSN:1K OHM,5%,0.25W | 01121 | CB1025 |
| R127 | 315-0333-00 | | | RES.,FXD,CMPSN:33K OHM,5%,0.25W | 01121 | CB3335 |
| R128 | 322-0336-00 | | | RES.,FXD,FILM:30.9K OHM,1%,0.25W | 75042 | CEBT0-3092F |
| R129 | 311-1556-00 | | | RES.,VAR,NONWIR:50K OHM,20%,0.50W | 73138 | 91A R50K |
| R131 | 321-0193-00 | | | RES.,FXD,FILM:1K OHM,1%,0.125W | 91637 | MFF1816G10000F |

[1]Used on -00, -01, and -02 suffix board only.
[2]Used on -04 suffix board only.

| Ckt No. | Tektronix Part No. | Serial/Model No. Eff | Dscont | Name & Description | Mfr Code | Mfr Part Number |
|---|---|---|---|---|---|---|
| R132 | 323-0362-00 | | | RES.,FXD,FILM:57.6K OHM,1%,0.50W | 75042 | CECT0-5762F |
| R133 | 305-0223-00 | | | RES.,FXD,CMPSN:22K OHM,5%,2W | 01121 | HB2235 |
| R135 | 315-0101-03 | | | RES.,FXD,CMPSN:100 OHM,5%,0.25W | 01121 | CB1015 |
| R140 | 315-0101-03 | | | RES.,FXD,CMPSN:100 OHM,5%,0.25W | 01121 | CB1015 |
| R146 | 315-0101-03 | | | RES.,FXD,CMPSN:100 OHM,5%,0.25W | 01121 | CB1015 |
| R148 | 322-0452-00 | | | RES.,FXD,FILM:499K OHM,1%,0.25W | 91637 | MFF1421G49902F |
| R149 | 315-0101-03 | | | RES.,FXD,CMPSN:100 OHM,5%,0.25W | 01121 | CB1015 |
| R152 | 315-0102-00 | | | RES.,FXD,CMPSN:1K OHM,5%,0.25W | 01121 | CB1025 |
| R153 | 315-0100-02 | | | RES.,FXD,CMPSN:10 OHM,5%,0.25W | 01121 | CB1005 |
| R154 | 315-0102-00 | | | RES.,FXD,CMPSN:1K OHM,5%,0.25W | 01121 | CB1025 |
| R159 | 323-0398-00 | | | RES.,FXD,FILM:137K OHM,1%,0.50W | 91637 | MFF1226G13702F |
| R167 | 305-0124-00 | | | RES.,FXD,CMPSN:120K OHM,5%,2W | 01121 | HB1245 |
| R168 | 315-0101-03 | | | RES.,FXD,CMPSN:100 OHM,5%,0.25W | 01121 | CB1015 |
| R169 | 305-0154-00 | | | RES.,FXD,CMPSN:150K OHM,5%,2W | 01121 | HB1545 |
| R176 | 321-0214-00 | | | RES.,FXD,FILM:1.65K OHM,1%,0.125W | 91637 | MFF1816G16500F |
| R178 | 321-0214-00 | | | RES.,FXD,FILM:1.65K OHM,1%,0.125W | 91637 | MFF1816G16500F |
| R189 | 315-0100-02 | | | RES.,FXD,CMPSN:10 OHM,5%,0.25W | 01121 | CB1005 |
| R190 | 315-0100-02 | | | RES.,FXD,CMPSN:10 OHM,5%,0.25W | 01121 | CB1005 |
| R191 | 315-0511-00 | | | RES.,FXD,CMPSN:510 OHM,5%,0.25W | 01121 | CB5115 |
| R192 | 315-0511-00 | | | RES.,FXD,CMPSN:510 OHM,5%,0.25W | 01121 | CB5115 |
| R196 | 301-0472-00 | | | RES.,FXD,CMPSN:4.7K OHM,5%,0.50W | 01121 | EB4725 |
| R198 | 321-0253-00 | | | RES.,FXD,FILM:4.22K OHM,1%,0.125W | 91637 | MFF1816G42200F |
| R199 | 315-0222-00 | | | RES.,FXD,CMPSN:2.2K OHM,5%,0.25W | 01121 | CB2225 |
| R208 | 301-0101-00 | | | RES.,FXD,CMPSN:100 OHM,5%,0.50W | 01121 | EB1015 |
| R209 | 301-0101-00 | | | RES.,FXD,CMPSN:100 OHM,5%,0.50W | 01121 | EB1015 |
| R212 | 307-0314-00 | | | RES.,FXD,FILM:VOLTAGE DIVIDE | 80009 | 307-0314-00 |
| R221 | 315-0100-02 | | | RES.,FXD,CMPSN:10 OHM,5%,0.25W | 01121 | CB1005 |
| R223 | 321-0452-00 | | | RES.,FXD,FILM:499K OHM,1%,0.125W | 91637 | MFF1816G49902F |
| R224 | 311-1556-00 | | | RES.,VAR,NONWIR:50K OHM,20%,0.50W | 73138 | 91A R50K |
| R227 | 315-0681-00 | | | RES.,FXD,CMPSN:680 OHM,5%,0.25W | 01121 | CB6815 |
| R228 | 315-0102-00 | | | RES.,FXD,CMPSN:1K OHM,5%,0.25W | 01121 | CB1025 |
| R229 | 315-0100-02 | | | RES.,FXD,CMPSN:10 OHM,5%,0.25W | 01121 | CB1005 |
| R235 | 322-0338-00 | | | RES.,FXD,FILM:32.4K OHM,1%,0.25W | 75042 | CEBT0-3242F |
| R236 | 321-0289-00 | | | RES.,FXD,FILM:10K OHM,1%,0.125W | 91637 | MFF1816G10001F |
| R237 | 306-0272-00 | | | RES.,FXD,CMPSN:2.7K OHM,10%,2W | 01121 | HB2721 |
| R242 | 301-0103-00 | | | RES.,FXD,CMPSN:10K OHM,5%,0.50W | 01121 | EB1035 |
| R244 | 315-0682-00 | | | RES.,FXD,CMPSN:6.8K OHM,5%,0.25W | 01121 | CB6825 |
| R246 | 315-0101-03 | | | RES.,FXD,CMPSN:100 OHM,5%,0.25W | 01121 | CB1015 |
| R248 | 311-1228-00 | | | RES.,VAR,NONWIR:10K OHM,20%,0.50W | 32997 | 3386F-T04-103 |
| R249 | 315-0101-03 | | | RES.,FXD,CMPSN:100 OHM,5%,0.25W | 01121 | CB1015 |
| R252 | 311-1559-00 | | | RES.,VAR,NONWIR:10K OHM,20%,0.50W | 73138 | 91A-10001M |
| R253 | 315-0272-00 | | | RES.,FXD,CMPSN:2.7K OHM,5%,0.25W | 01121 | CB2725 |
| R254 | 315-0471-00 | | | RES.,FXD,CMPSN:470 OHM,5%,0.25W | 01121 | CB4715 |
| R255 | 315-0103-00 | | | RES.,FXD,CMPSN:10K OHM,5%,0.25W | 01121 | CB1035 |
| R257 | 315-0103-00 | | | RES.,FXD,CMPSN:10K OHM,5%,0.25W | 01121 | CB1035 |
| R260 | 321-0260-00 | | | RES.,FXD,FILM:4.99K OHM,1%,0.125W | 91637 | MFF1816G49900F |
| R261 | 321-0294-00 | | | RES.,FXD,FILM:11.3K OHM,1%,0.125W | 91637 | MFF1816G11301F |
| R262 | 321-0353-00 | | | RES.,FXD,FILM:46.4K OHM,1%,0.125W | 91637 | MFF1816G46401F |
| R263 | 315-0101-03 | | | RES.,FXD,CMPSN:100 OHM,5%,0.25W | 01121 | CB1015 |
| R264 | 315-0682-00 | | | RES.,FXD,CMPSN:6.8K OHM,5%,0.25W | 01121 | CB6825 |
| R267 | 315-0101-03 | | | RES.,FXD,CMPSN:100 OHM,5%,0.25W | 01121 | CB1015 |
| R270 | 311-1731-00 | | | RES.,VAR,NONWIR:20 OHM,0.5W | 73138 | 91A-20R00M |
| R271 | 311-1560-00 | | | RES.,VAR,NONWIR:5K OHM,5%,0.50W | 73138 | 91A-50000M |

| Ckt No. | Tektronix Part No. | Serial/Model No. Eff | Dscont | Name & Description | Mfr Code | Mfr Part Number |
|---|---|---|---|---|---|---|
| R272 | 311-1731-00 | | | RES.,VAR,NONWIR:20 OHM,0.5W | 73138 | 91A-20R00M |
| R273 | 311-1560-00 | | | RES.,VAR,NONWIR:5K OHM,5%,0.50W | 73138 | 91A-50000M |
| R280 | 321-0387-00 | | | RES.,FXD,FILM:105K OHM,1%,0.125W | 91637 | MFF1816G10502F |
| R281 | 321-0328-00 | | | RES.,FXD,FILM:25.5K OHM,1%,0.125W | 91637 | MFF1816G25501F |
| R282 | 321-0318-00 | | | RES.,FXD,FILM:20K OHM,1%,0.125W | 91637 | MFF1816G20001F |
| R284 | 321-0214-00 | | | RES.,FXD,FILM:1.65K OHM,1%,0.125W | 91637 | MFF1816G16500F |
| R286 | 321-0318-00 | | | RES.,FXD,FILM:20K OHM,1%,0.125W | 91637 | MFF1816G20001F |
| R287 | 321-0318-00 | | | RES.,FXD,FILM:20K OHM,1%,0.125W | 91637 | MFF1816G20001F |
| R289 | 321-0387-00 | | | RES.,FXD,FILM:105K OHM,1%,0.125W | 91637 | MFF1816G10502F |
| R290 | 321-0328-00 | | | RES.,FXD,FILM:25.5K OHM,1%,0.125W | 91637 | MFF1816G25501F |
| R291 | 321-0318-00 | | | RES.,FXD,FILM:20K OHM,1%,0.125W | 91637 | MFF1816G20001F |
| R292 | 321-0214-00 | | | RES.,FXD,FILM:1.65K OHM,1%,0.125W | 91637 | MFF1816G16500F |
| R293 | 321-0317-00 | | | RES.,FXD,FILM:19.6K OHM,1%,0.125W | 91637 | MFF1816G19601F |
| R294 | 321-0318-00 | | | RES.,FXD,FILM:20K OHM,1%,0.125W | 91637 | MFF1816G20001F |
| R295 | 321-0306-00 | | | RES.,FXD,FILM:15K OHM,1%,0.125W | 91637 | MFF1816G15001F |
| R297 | 321-0253-00 | | | RES.,FXD,FILM:4.22K OHM,1%,0.125W | 91637 | MFF1816G42200F |
| R298 | 321-0253-00 | | | RES.,FXD,FILM:4.22K OHM,1%,0.125W | 91637 | MFF1816G42200F |
| R299 | 321-0253-00 | | | RES.,FXD,FILM:4.22K OHM,1%,0.125W | 91637 | MFF1816G42200F |
| R321 | 315-0224-00 | | | RES.,FXD,CMPSN:220K OHM,5%,0.25W | 01121 | CB2245 |
| R322 | 315-0824-00 | | | RES.,FXD,CMPSN:820K OHM,5%,0.25W | 01121 | CB8245 |
| R323 | 315-0824-00 | | | RES.,FXD,CMPSN:820K OHM,5%,0.25W | 01121 | CB8245 |
| R324 | 315-0104-00 | | | RES.,FXD,CMPSN:100K OHM,5%,0.25W | 01121 | CB1045 |
| R326 | 315-0822-00 | | | RES.,FXD,CMPSN:8.2K OHM,5%,0.25W | 01121 | CB8225 |
| R329 | 315-0222-00 | | | RES.,FXD,CMPSN:2.2K OHM,5%,0.25W | 01121 | CB2225 |
| R330 | 315-0221-00 | | | RES.,FXD,CMPSN:220 OHM,5%,0.25W | 01121 | CB2215 |
| R331 | 315-0152-00 | | | RES.,FXD,CMPSN:1.5K OHM,5%,0.25W | 01121 | CB1525 |
| R332 | 315-0221-00 | | | RES.,FXD,CMPSN:220 OHM,5%,0.25W | 01121 | CB2215 |
| R333 | 315-0471-00 | | | RES.,FXD,CMPSN:470 OHM,5%,0.25W | 01121 | CB4715 |
| R334 | 315-0301-00 | | | RES.,FXD,CMPSN:300 OHM,5%,0.25W | 01121 | CB3015 |
| R335 | 315-0100-02 | | | RES.,FXD,CMPSN:10 OHM,5%,0.25W | 01121 | CB1005 |
| R336 | 315-0102-00 | | | RES.,FXD,CMPSN:1K OHM,5%,0.25W | 01121 | CB1025 |
| R339 | 315-0470-03 | | | RES.,FXD,CMPSN:47 OHM,5%,0.25W | 01121 | CB4705 |
| R341 | 323-0396-00 | | | RES.,FXD,FILM:130K OHM,1%,0.50W | 75042 | CECT0-1303F |
| R342 | 321-0269-00 | | | RES.,FXD,FILM:6.19K OHM,1%,0.125W | 91637 | MFF1816G61900F |
| R343 | 315-0102-00 | | | RES.,FXD,CMPSN:1K OHM,5%,0.25W | 01121 | CB1025 |
| R344 | 315-0472-00 | | | RES.,FXD,CMPSN:4.7K OHM,5%,0.25W | 01121 | CB4725 |
| R345 | 315-0222-00 | | | RES.,FXD,CMPSN:2.2K OHM,5%,0.25W | 01121 | CB2225 |
| R346 | 321-0316-00 | | | RES.,FXD,FILM:19.1K OHM,1%,0.125W | 91637 | MFF1816G19101F |
| R347 | 321-0309-00 | | | RES.,FXD,FILM:16.2K OHM,1%,0.125W | 91637 | MFF1816G16201F |
| R348 | 321-0289-00 | | | RES.,FXD,FILM:10K OHM,1%,0.125W | 91637 | MFF1816G10001F |
| R351 | 315-0101-03 | | | RES.,FXD,CMPSN:100 OHM,5%,0.25W | 01121 | CB1015 |
| R352 | 321-0385-00 | | | RES.,FXD,FILM:100K OHM,1%,0.125W | 91637 | MFF1816G10002F |
| R356 | 315-0471-00 | | | RES.,FXD,CMPSN:470 OHM,5%,0.25W | 01121 | CB4715 |
| R357 | 315-0471-00 | | | RES.,FXD,CMPSN:470 OHM,5%,0.25W | 01121 | CB4715 |
| R358 [1] | 315-0103-03 | | | RES.,FXD,CMPSN:10K OHM,5%,0.25W | 01121 | CB1035 |
| R359 | 311-1228-00 | | | RES.,VAR,NONWIR:10K OHM,20%,0.50W | 32997 | 3386F-T04-103 |
| R360 | 321-0260-00 | | | RES.,FXD,FILM:4.99K OHM,1%,0.125W | 91637 | MFF1816G49900F |
| R361 | 321-0260-00 | | | RES.,FXD,FILM:4.99K OHM,1%,0.125W | 91637 | MFF1816G49900F |
| R369 | 315-0105-00 | | | RES.,FXD,CMPSN:1M OHM,5%,0.25W | 01121 | CB1055 |
| R374 | 321-0289-00 | | | RES.,FXD,FILM:10K OHM,1%,0.125W | 91637 | MFF1816G10001F |
| R375 | 321-0193-00 | | | RES.,FXD,FILM:1K OHM,1%,0.125W | 91637 | MFF1816G10000F |
| R376 | 321-0301-00 | | | RES.,FXD,FILM:13.3K OHM,1%,0.125W | 91637 | MFF1816G13301F |
| R377 | 321-0301-00 | | | RES.,FXD,FILM:13.3K OHM,1%,0.125W | 91637 | MFF1816G13301F |

[1]Used on -01 board and up.

| Ckt No. | Tektronix Part No. | Serial/Model No. Eff | Dscont | Name & Description | Mfr Code | Mfr Part Number |
|---|---|---|---|---|---|---|
| R382 | 321-0280-00 | | | RES.,FXD,FILM:8.06K OHM,1%,0.125W | 91637 | MFF1816G80600F |
| R384 | 321-0306-00 | | | RES.,FXD,FILM:15K OHM,1%,0.125W | 91637 | MFF1816G15001F |
| R390 | 321-0309-00 | | | RES.,FXD,FILM:16.2K OHM,1%,0.125W | 91637 | MFF1816G16201F |
| R391 | 321-0309-00 | | | RES.,FXD,FILM:16.2K OHM,1%,0.125W | 91637 | MFF1816G16201F |
| R392 | 311-1567-00 | | | RES.,VAR,NONWIR:100 OHM,20%,0.50W | 73138 | 91A-100R0M |
| R393 | 311-1567-00 | | | RES.,VAR,NONWIR:100 OHM,20%,0.50W | 73138 | 91A-100R0M |
| R398 | 321-0306-00 | | | RES.,FXD,FILM:15K OHM,1%,0.125W | 91637 | MFF1816G15001F |
| R427 | 315-0103-00 | | | RES.,FXD,CMPSN:10K OHM,5%,0.25W | 01121 | CB1035 |
| R428 | 315-0122-00 | | | RES.,FXD,CMPSN:1.2K OHM,5%,0.25W | 01121 | CB1225 |
| R429 | 315-0272-00 | | | RES.,FXD,CMPSN:2.7K OHM,5%,0.25W | 01121 | CB2725 |
| R430 | 315-0101-03 | | | RES.,FXD,CMPSN:100 OHM,5%,0.25W | 01121 | CB1015 |
| R432 | 315-0272-00 | | | RES.,FXD,CMPSN:2.7K OHM,5%,0.25W | 01121 | CB2725 |
| R433 | 308-0244-00 | | | RES.,FXD,WW:0.3 OHM,10%,2W | 91637 | RS2B162ER3000K |
| R434 | 308-0244-00 | | | RES.,FXD,WW:0.3 OHM,10%,2W | 91637 | RS2B162ER3000K |
| R435 | 307-0103-00 | | | RES.,FXD,CMPSN:2.7 OHM,5%,0.25W | 01121 | CB27G5 |
| R436 | 315-0472-00 | | | RES.,FXD,CMPSN:4.7K OHM,5%,0.25W | 01121 | CB4725 |
| R438 | 315-0100-02 | | | RES.,FXD,CMPSN:10 OHM,5%,0.25W | 01121 | CB1005 |
| R439 | 315-0100-02 | | | RES.,FXD,CMPSN:10 OHM,5%,0.25W | 01121 | CB1005 |
| R443 | 321-0280-00 | | | RES.,FXD,FILM:8.06K OHM,1%,0.125W | 91637 | MFF1816G80600F |
| R444 | 321-0274-00 | | | RES.,FXD,FILM:6.98K OHM,1%,0.125W | 91637 | MFF1816G69800F |
| R446 | 315-0335-00 | | | RES.,FXD,CMPSN:3.3M OHM,5%,0.25W | 01121 | CB3355 |
| R447 | 315-0102-00 | | | RES.,FXD,CMPSN:1K OHM,5%,0.25W | 01121 | CB1025 |
| R448 | 315-0152-00 | | | RES.,FXD,CMPSN:1.5K OHM,5%,0.25W | 01121 | CB1525 |
| R449 | 315-0154-00 | | | RES.,FXD,CMPSN:150K OHM,5%,0.25W | 01121 | CB1545 |
| R450 | 315-0103-00 | | | RES.,FXD,CMPSN:10K OHM,5%,0.25W | 01121 | CB1035 |
| R451 | 315-0473-00 | | | RES.,FXD,CMPSN:47K OHM,5%,0.25W | 01121 | CB4735 |
| R452 | 315-0103-00 | | | RES.,FXD,CMPSN:10K OHM,5%,0.25W | 01121 | CB1035 |
| R453 | 315-0472-00 | | | RES.,FXD,CMPSN:4.7K OHM,5%,0.25W | 01121 | CB4725 |
| R454 | 315-0472-00 | | | RES.,FXD,CMPSN:4.7K OHM,5%,0.25W | 01121 | CB4725 |
| R455 | 315-0102-00 | | | RES.,FXD,CMPSN:1K OHM,5%,0.25W | 01121 | CB1025 |
| R456 | 315-0102-00 | | | RES.,FXD,CMPSN:1K OHM,5%,0.25W | 01121 | CB1025 |
| R457[1] | 315-0102-03 | | | RES.,FXD,CMPSN:1K OHM,5%,0.25W | 01121 | CB1025 |
| R458[1] | 315-0102-03 | | | RES.,FXD,CMPSN:1K OHM,5%,0.25W | 01121 | CB1025 |
| R459 | 321-0315-00 | | | RES.,FXD,FILM:18.7K OHM,1%,0.125W | 91637 | MFF1816G18701F |
| R460 | 315-0102-00 | | | RES.,FXD,CMPSN:1K OHM,5%,0.25W | 01121 | CB1025 |
| R461 | 315-0182-00 | | | RES.,FXD,CMPSN:1.8K OHM,5%,0.25W | 01121 | CB1825 |
| R462 | 315-0103-00 | | | RES.,FXD,CMPSN:10K OHM,5%,0.25W | 01121 | CB1035 |
| R463 | 315-0103-00 | | | RES.,FXD,CMPSN:10K OHM,5%,0.25W | 01121 | CB1035 |
| R464 | 315-0182-00 | | | RES.,FXD,CMPSN:1.8K OHM,5%,0.25W | 01121 | CB1825 |
| R465 | 315-0102-00 | | | RES.,FXD,CMPSN:1K OHM,5%,0.25W | 01121 | CB1025 |
| R466 | 315-0102-00 | | | RES.,FXD,CMPSN:1K OHM,5%,0.25W | 01121 | CB1025 |
| R467 | 315-0103-00 | | | RES.,FXD,CMPSN:10K OHM,5%,0.25W | 01121 | CB1035 |
| R468 | 321-0339-00 | | | RES.,FXD,FILM:33.2K OHM,1%,0.125W | 91637 | MFF1816G33201F |
| R472 | 315-0102-00 | | | RES.,FXD,CMPSN:1K OHM,5%,0.25W | 01121 | CB1025 |
| R473[2] | 315-0103-00 | | | RES.,FXD,CMPSN:10K OHM,5%,0.25W | 01121 | CB1035 |
| R477 | 321-0253-00 | | | RES.,FXD,FILM:4.22K OHM,1%,0.125W | 91637 | MFF1816G42200F |
| R478 | 321-0253-00 | | | RES.,FXD,FILM:4.22K OHM,1%,0.125W | 91637 | MFF1816G42200F |
| R482 | 315-0470-03 | | | RES.,FXD,CMPSN:47 OHM,5%,0.25W | 01121 | CB4705 |
| R483 | 321-0289-00 | | | RES.,FXD,FILM:10K OHM,1%,0.125W | 91637 | MFF1816G10001F |
| R485 | 321-0309-00 | | | RES.,FXD,FILM:16.2K OHM,1%,0.125W | 91637 | MFF1816G16201F |
| R491 | 315-0470-03 | | | RES.,FXD,CMPSN:47 OHM,5%,0.25W | 01121 | CB4705 |
| R492 | 321-0301-00 | | | RES.,FXD,FILM:13.3K OHM,1%,0.125W | 91637 | MFF1816G13301F |
| R493 | 321-0318-00 | | | RES.,FXD,FILM:20K OHM,1%,0.125W | 91637 | MFF1816G20001F |

[1]Used on -01 boards and up.
[2]Used on -02 boards and up.

| Ckt No. | Tektronix Part No. | Serial/Model No. Eff | Dscont | Name & Description | Mfr Code | Mfr Part Number |
|---|---|---|---|---|---|---|
| R494 | 321-0318-00 | | | RES.,FXD,FILM:20K OHM,1%,0.125W | 91637 | MFF1816G20001F |
| R495 | 321-0321-00 | | | RES.,FXD,FILM:21.5K OHM,1%,0.125W | 91637 | MFF1816G21501F |
| R498 | 321-0402-00 | | | RES.,FXD,FILM:150K OHM,1%,0.125W | 91637 | MFF1816G15002F |
| R544 | 307-0103-00 | | | RES.,FXD,CMPSN:2.7 OHM,5%,0.25W | 01121 | CB27G5 |
| R545 | 307-0103-00 | | | RES.,FXD,CMPSN:2.7 OHM,5%,0.25W | 01121 | CB27G5 |
| R546 | 315-0102-00 | | | RES.,FXD,CMPSN:1K OHM,5%,0.25W | 01121 | CB1025 |
| R547 | 315-0472-00 | | | RES.,FXD,CMPSN:4.7K OHM,5%,0.25W | 01121 | CB4725 |
| R548 | 315-0273-00 | | | RES.,FXD,CMPSN:27K OHM,5%,0.25W | 01121 | CB2735 |
| R551[1] | 315-0103-00 | | | RES.,FXD,CMPSN:10K OHM,5%,0.25W | 01121 | CB1035 |
| R572 | 321-0289-00 | | | RES.,FXD,FILM:10K OHM,1%,0.125W | 91637 | MFF1816G10001F |
| R573 | 321-0288-00 | | | RES.,FXD,FILM:9.76K OHM,1%,0.125W | 91637 | MFF1816G97600F |
| R574 | 321-0289-00 | | | RES.,FXD,FILM:10K OHM,1%,0.125W | 91637 | MFF1816G10001F |
| R576 | 321-0289-00 | | | RES.,FXD,FILM:10K OHM,1%,0.125W | 91637 | MFF1816G10001F |
| R578 | 321-0346-00 | | | RES.,FXD,FILM:39.2K OHM,1%,0.125W | 91637 | MFF1816G39201F |
| R581 | 321-0289-00 | | | RES.,FXD,FILM:10K OHM,1%,0.125W | 91637 | MFF1816G10001F |
| R582 | 321-0289-00 | | | RES.,FXD,FILM:10K OHM,1%,0.125W | 91637 | MFF1816G10001F |
| R583 | 321-0348-00 | | | RES.,FXD,FILM:41.2K OHM,1%,0.125W | 91637 | MFF1816G41201F |
| R585 | 321-0339-00 | | | RES.,FXD,FILM:33.2K OHM,1%,0.125W | 91637 | MFF1816G33201F |
| R587 | 321-0289-00 | | | RES.,FXD,FILM:10K OHM,1%,0.125W | 91637 | MFF1816G10001F |
| R588 | 321-0289-00 | | | RES.,FXD,FILM:10K OHM,1%,0.125W | 91637 | MFF1816G10001F |
| R591 | 321-0402-00 | | | RES.,FXD,FILM:150K OHM,1%,0.125W | 91637 | MFF1816G15002F |
| R592 | 321-0318-00 | | | RES.,FXD,FILM:20K OHM,1%,0.125W | 91637 | MFF1816G20001F |
| R594 | 321-0402-00 | | | RES.,FXD,FILM:150K OHM,1%,0.125W | 91637 | MFF1816G15002F |
| R595 | 321-0289-00 | | | RES.,FXD,FILM:10K OHM,1%,0.125W | 91637 | MFF1816G10001F |
| R597 | 321-0402-00 | | | RES.,FXD,FILM:150K OHM,1%,0.125W | 91637 | MFF1816G15002F |
| R598 | 321-0289-00 | | | RES.,FXD,FILM:10K OHM,1%,0.125W | 91637 | MFF1816G10001F |
| R599 | 321-0318-00 | | | RES.,FXD,FILM:20K OHM,1%,0.125W | 91637 | MFF1816G20001F |
| R651 | 315-0102-00 | | | RES.,FXD,CMPSN:1K OHM,5%,0.25W | 01121 | CB1025 |
| R652 | 315-0471-00 | | | RES.,FXD,CMPSN:470 OHM,5%,0.25W | 01121 | CB4715 |
| R654 | 315-0472-00 | | | RES.,FXD,CMPSN:4.7K OHM,5%,0.25W | 01121 | CB4725 |
| R655 | 315-0102-00 | | | RES.,FXD,CMPSN:1K OHM,5%,0.25W | 01121 | CB1025 |
| R656 | 315-0472-00 | | | RES.,FXD,CMPSN:4.7K OHM,5%,0.25W | 01121 | CB4725 |
| R657 | 315-0272-00 | | | RES.,FXD,CMPSN:2.7K OHM,5%,0.25W | 01121 | CB2725 |
| R658 | 315-0272-00 | | | RES.,FXD,CMPSN:2.7K OHM,5%,0.25W | 01121 | CB2725 |
| R659 | 321-0247-00 | | | RES.,FXD,FILM:3.65K OHM,1%,0.125W | 91637 | MFF1816G36500F |
| R660 | 315-0102-00 | | | RES.,FXD,CMPSN:1K OHM,5%,0.25W | 01121 | CB1025 |
| R661 | 315-0472-00 | | | RES.,FXD,CMPSN:4.7K OHM,5%,0.25W | 01121 | CB4725 |
| R662 | 315-0101-03 | | | RES.,FXD,CMPSN:100 OHM,5%,0.25W | 01121 | CB1015 |
| R663 | 315-0472-00 | | | RES.,FXD,CMPSN:4.7K OHM,5%,0.25W | 01121 | CB4725 |
| R670 | 307-0103-00 | | | RES.,FXD,CMPSN:2.7 OHM,5%,0.25W | 01121 | CB27G5 |
| R672 | 307-0103-00 | | | RES.,FXD,CMPSN:2.7 OHM,5%,0.25W | 01121 | CB27G5 |
| R673 | 315-0102-00 | | | RES.,FXD,CMPSN:1K OHM,5%,0.25W | 01121 | CB1025 |
| R678 | 321-0346-00 | | | RES.,FXD,FILM:39.2K OHM,1%,0.125W | 91637 | MFF1816G39201F |
| R679 | 321-0289-00 | | | RES.,FXD,FILM:10K OHM,1%,0.125W | 91637 | MFF1816G10001F |
| R681 | 321-0289-00 | | | RES.,FXD,FILM:10K OHM,1%,0.125W | 91637 | MFF1816G10001F |
| R682 | 321-0348-00 | | | RES.,FXD,FILM:41.2K OHM,1%,0.125W | 91637 | MFF1816G41201F |
| R686 | 311-1554-00 | | | RES.,VAR,NONWIR:200K OHM,20%,0.50W | 73138 | 91A R200K |
| R687 | 311-1555-00 | | | RES.,VAR,NONWIR:100K OHM,20%,0.5W | 73138 | 91A R100K |
| R688 | 315-0102-00 | | | RES.,FXD,CMPSN:1K OHM,5%,0.25W | 01121 | CB1025 |
| R691 | 311-1554-00 | | | RES.,VAR,NONWIR:200K OHM,20%,0.50W | 73138 | 91A R200K |
| R693 | 321-0270-00 | | | RES.,FXD,FILM:6.34K OHM,1%,0.125W | 91637 | MFF1816G63400F |
| R694 | 321-0385-00 | | | RES.,FXD,FILM:100K OHM,1%,0.125W | 91637 | MFF1816G10002F |
| R695 | 311-1555-00 | | | RES.,VAR,NONWIR:100K OHM,20%,0.5W | 73138 | 91A R100K |

[1]Used on -00 and -01 suffix board only.

| Ckt No. | Tektronix Part No. | Serial/Model No. Eff | Dscont | Name & Description | Mfr Code | Mfr Part Number |
|---|---|---|---|---|---|---|
| R696 | 315-0912-00 | | | RES.,FXD,CMPSN:9.1K OHM,5%,0.25W | 01121 | CB9125 |
| R697 | 315-0912-00 | | | RES.,FXD,CMPSN:9.1K OHM,5%,0.25W | 01121 | CB9125 |
| R698 | 315-0471-00 | | | RES.,FXD,CMPSN:470 OHM,5%,0.25W | 01121 | CB4715 |
| R699 | 315-0471-00 | | | RES.,FXD,CMPSN:470 OHM,5%,0.25W | 01121 | CB4715 |
| R772 | 321-0289-00 | | | RES.,FXD,FILM:10K OHM,1%,0.125W | 91637 | MFF1816G10001F |
| R773 | 321-0288-00 | | | RES.,FXD,FILM:9.76K OHM,1%,0.125W | 91637 | MFF1816G97600F |
| R774 | 321-0289-00 | | | RES.,FXD,FILM:10K OHM,1%,0.125W | 91637 | MFF1816G10001F |
| R776 | 321-0289-00 | | | RES.,FXD,FILM:10K OHM,1%,0.125W | 91637 | MFF1816G10001F |
| R778 | 321-0339-00 | | | RES.,FXD,FILM:33.2K OHM,1%,0.125W | 91637 | MFF1816G33201F |
| R782 | 321-0289-00 | | | RES.,FXD,FILM:10K OHM,1%,0.125W | 91637 | MFF1816G10001F |
| R783 | 321-0289-00 | | | RES.,FXD,FILM:10K OHM,1%,0.125W | 91637 | MFF1816G10001F |
| R786 | 321-0270-00 | | | RES.,FXD,FILM:6.34K OHM,1%,0.125W | 91637 | MFF1816G63400F |
| R787 | 321-0385-00 | | | RES.,FXD,FILM:100K OHM,1%,0.125W | 91637 | MFF1816G10002F |
| R792 | 315-0183-00 | | | RES.,FXD,CMPSN:18K OHM,5%,0.25W | 01121 | CB1835 |
| R793 | 315-0183-00 | | | RES.,FXD,CMPSN:18K OHM,5%,0.25W | 01121 | CB1835 |
| R794 | 315-0471-00 | | | RES.,FXD,CMPSN:470 OHM,5%,0.25W | 01121 | CB4715 |
| R795 | 315-0393-00 | | | RES.,FXD,CMPSN:39K OHM,5%,0.25W | 01121 | CB3935 |
| R796 | 315-0393-00 | | | RES.,FXD,CMPSN:39K OHM,5%,0.25W | 01121 | CB3935 |
| R797 | 321-0134-00 | | | RES.,FXD,FILM:243 OHM,1%,0.125W | 91637 | MFF1816G243R0F |
| R798 | 321-0134-00 | | | RES.,FXD,FILM:243 OHM,1%,0.125W | 91637 | MFF1816G243R0F |
| T154 | 120-1026-00 | | | XFMR,RF:TOROID,2 WINDINGS | 80009 | 120-1026-00 |
| T314 | 120-1028-00 | | | XFMR,PWR,SDN&SU:HIGH VOLTAGE | 80009 | 120-1028-00 |
| U155 | 156-0162-00 | | | MICROCIRCUIT,LI:DIFFERENTIAL VIDEO AMPL | 80009 | 156-0162-00 |
| U184 | 156-0158-00 | | | MICROCIRCUIT,LI:DUAL OPERATIONAL AMPLIFIER | 80009 | 156-0158-00 |
| U255 | 156-0096-00 | | | MICROCIRCUIT,LI:VOLTAGE COMPARATOR | 27014 | LM311H |
| U296 | 156-0048-00 | | | MICROCIRCUIT,LI:FIVE NPN TRANSISTOR ARRAY | 02735 | CA3046 |
| U381 | 156-0158-00 | | | MICROCIRCUIT,LI:DUAL OPERATIONAL AMPLIFIER | 80009 | 156-0158-00 |
| U445 | 156-0067-00 | | | MICROCIRCUIT,LI:OPERATIONAL AMPLIFIER | 80009 | 156-0067-00 |
| U496 | 156-0158-00 | | | MICROCIRCUIT,LI:DUAL OPERATIONAL AMPLIFIER | 80009 | 156-0158-00 |
| U552 | 156-0145-00 | | | MICROCIRCUIT,DI:QUAD 2-INPUT POS NAND BFR | 01295 | SN7438N |
| U555 | 156-0093-00 | | | MICROCIRCUIT,DI:HEX.INVERTER | 01295 | SN7416N |
| U557 | 156-0706-00 | | | MICROCIRCUIT,DI:DUAL MONOSTABLE MV | 01295 | SN74221N |
| U561 | 156-0093-00 | | | MICROCIRCUIT,DI:HEX.INVERTER | 01295 | SN7416N |
| U566 | 156-0706-00 | | | MICROCIRCUIT,DI:DUAL MONOSTABLE MV | 01295 | SN74221N |
| U577 | 156-0158-00 | | | MICROCIRCUIT,LI:DUAL OPERATIONAL AMPLIFIER | 80009 | 156-0158-00 |
| U777 | 156-0158-00 | | | MICROCIRCUIT,LI:DUAL OPERATIONAL AMPLIFIER | 80009 | 156-0158-00 |
| U791 | 156-0032-00 | | | MICROCIRCUIT,DI:4-BIT BINARY COUNTER | 01295 | SN7493AN |
| VR196 | 152-0195-00 | | | SEMICOND DEVICE:ZENER,0.4W,5.1V,5% | 80009 | 152-0195-00 |
| VR265 | 152-0394-00 | | | SEMICOND DEVICE:ZENER,1W,47V,5% | 81483 | 1N3036B |
| VR266 | 152-0087-00 | | | SEMICOND DEVICE:ZENER,1W,100V,5% | 04713 | SZ1627 |
| VR358 | 152-0278-00 | | | SEMICOND DEVICE:ZENER,0.4W,3V,5% | 07910 | 1N4372A |

A3 KEYBOARD

| | | | | | | |
|---|---|---|---|---|---|---|
| C2 | 285-0917-00 | | | CAP.,FXD,PLSTC:0.0022UF,5%,200V | 84411 | TEK36-222-5-2 |
| C3 | 290-0136-00 | | | CAP.,FXD,ELCTLT:2.2UF,20%,20V | 56289 | 162D225X0020CD2 |
| C5 | 290-0136-00 | | | CAP.,FXD,ELCTLT:2.2UF,20%,20V | 56289 | 162D225X0020CD2 |
| R1 | 316-0472-00 | | | RES.,FXD,CMPSN:4.7K OHM,10%,0.25W | 01121 | CB4721 |
| R2 | 316-0472-00 | | | RES.,FXD,CMPSN:4.7K OHM,10%,0.25W | 01121 | CB4721 |
| R3 | 316-0103-00 | | | RES.,FXD,CMPSN:10K OHM,10%,0.25W | 01121 | CB1031 |
| R4 | 316-0472-00 | | | RES.,FXD,CMPSN:4.7K OHM,10%,0.25W | 01121 | CB4721 |
| R5 | 316-0472-00 | | | RES.,FXD,CMPSN:4.7K OHM,10%,0.25W | 01121 | CB4721 |

| Ckt No. | Tektronix Part No. | Serial/Model No. Eff | Dscont | Name & Description | Mfr Code | Mfr Part Number |
|---|---|---|---|---|---|---|
| R6 | 316-0472-00 | | | RES.,FXD,CMPSN:4.7K OHM,10%,0.25W | 01121 | CB4721 |
| R7 | 316-0472-00 | | | RES.,FXD,CMPSN:4.7K OHM,10%,0.25W | 01121 | CB4721 |
| R8 | 316-0472-00 | | | RES.,FXD,CMPSN:4.7K OHM,10%,0.25W | 01121 | CB4721 |
| R9 | 316-0472-00 | | | RES.,FXD,CMPSN:4.7K OHM,10%,0.25W | 01121 | CB4721 |
| R10 | 316-0472-00 | | | RES.,FXD,CMPSN:4.7K OHM,10%,0.25W | 01121 | CB4721 |
| S1-S53 | ----- ----- | | | SWITCH PUSH:(SEE FIG. 3 INDEX 7,8 MPL) | | |
| Z1 | 156-0169-00 | | | MICROCIRCUIT,DI:HEX. INVERTER | 04713 | MC836P |
| Z2 | 156-0032-00 | | | MICROCIRCUIT,DI:4-BIT BINARY COUNTER | 01295 | SN7493AN |
| Z3 | 156-0032-00 | | | MICROCIRCUIT,DI:4-BIT BINARY COUNTER | 01295 | SN7493AN |
| Z4 | 156-0081-00 | | | MICROCIRCUIT,LI:SGL RETRIGGERABLE MV | 07263 | 9601PC |
| Z5 | 156-0078-00 | | | MICROCIRCUIT,DI:4 TO 16 LINE DECODER | 01295 | SN74154N |
| Z6 | 156-0075-00 | | | MICROCIRCUIT,DI:SGL 8-BIT DATA SEL MUX | 80009 | 156-0075-00 |
| Z7 | 156-0040-00 | | | MICROCIRCUIT,DI:QUAD LATCH,TTL | 80009 | 156-0040-00 |
| Z8 | 156-0030-00 | | | MICROCIRCUIT,DI:QUAD 2-INPUT POS NAND GATE | 01295 | SN7400N |
| Z9 | 156-0030-00 | | | MICROCIRCUIT,DI:QUAD 2-INPUT POS NAND GATE | 01295 | SN7400N |
| Z10 | 156-0043-00 | | | MICROCIRCUIT,DI:QUAD 2-INPUT POS NOR GATE | 80009 | 156-0043-00 |
| Z11 | 156-0030-00 | | | MICROCIRCUIT,DI:QUAD 2-INPUT POS NAND GATE | 01295 | SN7400N |
| Z12 | 156-0030-00 | | | MICROCIRCUIT,DI:QUAD 2-INPUT POS NAND GATE | 01295 | SN7400N |
| Z13 | 156-0062-00 | | | MICROCIRCUIT,DI:QUAD 2-INPUT EXCL-OR GATE | 80009 | 156-0062-00 |
| | | | | A4 HALF DUPLEX | | |
| C1 | 290-0531-00 | | | CAP.,FXD,ELCTLT:100UF,20%,10V | 90201 | TDC107M010WLC |
| C12 | 290-0512-00 | | | CAP.,FXD,ELCTLT:22UF,20%,15V | 56289 | 196D226X0015KA1 |
| C17 | 281-0773-00 | | | CAP.,FXD,CER DI:0.01UF,10%,100V | 72982 | 8005H9AADW5R103K |
| C36 | 281-0773-00 | | | CAP.,FXD,CER DI:0.01UF,10%,100V | 72982 | 8005H9AADW5R103K |
| C37 | 281-0773-00 | | | CAP.,FXD,CER DI:0.01UF,10%,100V | 72982 | 8005H9AADW5R103K |
| C211 | 281-0773-00 | | | CAP.,FXD,CER DI:0.01UF,10%,100V | 72982 | 8005H9AADW5R103K |
| C237 | 281-0773-00 | | | CAP.,FXD,CER DI:0.01UF,10%,100V | 72982 | 8005H9AADW5R103K |
| C247 | 283-0212-00 | | | CAP.,FXD,CER DI:2UF,20%,50V | 72982 | 8141N064Z5U0205M |
| C313 | 281-0773-00 | | | CAP.,FXD,CER DI:0.01UF,10%,100V | 72982 | 8005H9AADW5R103K |
| C329 | 281-0773-00 | | | CAP.,FXD,CER DI:0.01UF,10%,100V | 72982 | 8005H9AADW5R103K |
| CR18 | 152-0075-00 | | | SEMICOND DEVICE:GE,25V,40MA | 80009 | 152-0075-00 |
| CR22 | 152-0141-02 | | | SEMICOND DEVICE:SILICON,30V,150MA | 07910 | 1N4152 |
| CR23 | 152-0141-02 | | | SEMICOND DEVICE:SILICON,30V,150MA | 07910 | 1N4152 |
| CR24 | 152-0141-02 | | | SEMICOND DEVICE:SILICON,30V,150MA | 07910 | 1N4152 |
| Q23 | 151-0302-00 | | | TRANSISTOR:SILICON,NPN | 04713 | 2N2222A |
| Q28 | 151-0188-00 | | | TRANSISTOR:SILICON,PNP | 01295 | 2N3906 |
| Q29 | 151-0302-00 | | | TRANSISTOR:SILICON,NPN | 04713 | 2N2222A |
| Q41 | 151-0188-00 | | | TRANSISTOR:SILICON,PNP | 01295 | 2N3906 |
| Q42 | 151-0302-00 | | | TRANSISTOR:SILICON,NPN | 04713 | 2N2222A |
| Q123 | 151-0302-00 | | | TRANSISTOR:SILICON,NPN | 04713 | 2N2222A |
| Q124 | 151-0302-00 | | | TRANSISTOR:SILICON,NPN | 04713 | 2N2222A |
| R14 | 315-0243-00 | | | RES.,FXD,CMPSN:24K OHM,5%,0.25W | 01121 | CB2435 |
| R18 | 315-0472-00 | | | RES.,FXD,CMPSN:4.7K OHM,5%,0.25W | 01121 | CB4725 |
| R19 | 315-0472-00 | | | RES.,FXD,CMPSN:4.7K OHM,5%,0.25W | 01121 | CB4725 |
| R21 | 315-0472-00 | | | RES.,FXD,CMPSN:4.7K OHM,5%,0.25W | 01121 | CB4725 |
| R31 | 315-0471-00 | | | RES.,FXD,CMPSN:470 OHM,5%,0.25W | 01121 | CB4715 |

| Ckt No. | Tektronix Part No. | Serial/Model No. Eff | Dscont | Name & Description | Mfr Code | Mfr Part Number |
|---|---|---|---|---|---|---|
| R32 | 315-0472-00 | | | RES.,FXD,CMPSN:4.7K OHM,5%,0.25W | 01121 | CB4725 |
| R33 | 315-0472-00 | | | RES.,FXD,CMPSN:4.7K OHM,5%,0.25W | 01121 | CB4725 |
| R34 | 315-0471-00 | | | RES.,FXD,CMPSN:470 OHM,5%,0.25W | 01121 | CB4715 |
| R103 | 315-0303-00 | | | RES.,FXD,CMPSN:30K OHM,5%,0.25W | 01121 | CB3035 |
| R112 | 315-0102-00 | | | RES.,FXD,CMPSN:1K OHM,5%,0.25W | 01121 | CB1025 |
| R127 | 315-0472-00 | | | RES.,FXD,CMPSN:4.7K OHM,5%,0.25W | 01121 | CB4725 |
| R128 | 315-0472-00 | | | RES.,FXD,CMPSN:4.7K OHM,5%,0.25W | 01121 | CB4725 |
| R129 | 315-0472-00 | | | RES.,FXD,CMPSN:4.7K OHM,5%,0.25W | 01121 | CB4725 |
| R131 | 315-0302-00 | | | RES.,FXD,CMPSN:3K OHM,5%,0.25W | 01121 | CB3025 |
| R132 | 315-0432-00 | | | RES.,FXD,CMPSN:4.3K OHM,5%,0.25W | 01121 | CB4325 |
| R133 | 315-0472-00 | | | RES.,FXD,CMPSN:4.7K OHM,5%,0.25W | 01121 | CB4725 |
| R134 | 315-0103-00 | | | RES.,FXD,CMPSN:10K OHM,5%,0.25W | 01121 | CB1035 |
| R137 | 315-0103-00 | | | RES.,FXD,CMPSN:10K OHM,5%,0.25W | 01121 | CB1035 |
| R138 | 315-0302-00 | | | RES.,FXD,CMPSN:3K OHM,5%,0.25W | 01121 | CB3025 |
| R139 | 315-0472-00 | | | RES.,FXD,CMPSN:4.7K OHM,5%,0.25W | 01121 | CB4725 |
| R141 | 315-0432-00 | | | RES.,FXD,CMPSN:4.3K OHM,5%,0.25W | 01121 | CB4325 |
| R143 | 315-0472-00 | | | RES.,FXD,CMPSN:4.7K OHM,5%,0.25W | 01121 | CB4725 |
| R144 | 315-0472-00 | | | RES.,FXD,CMPSN:4.7K OHM,5%,0.25W | 01121 | CB4725 |
| R301 | 315-0221-00 | | | RES.,FXD,CMPSN:220 OHM,5%,0.25W | 01121 | CB2215 |
| U111 | 156-0706-00 | | | MICROCIRCUIT,DI:DUAL MONOSTABLE MV | 01295 | SN74221N |
| U121 | 156-0129-00 | | | MICROCIRCUIT,DI:QUAD 2-INPUT GATE | 01295 | SN7408N |
| U211 | 156-0030-00 | | | MICROCIRCUIT,DI:QUAD 2-INPUT POS NAND GATE | 01295 | SN7400N |
| U221 | 156-0041-00 | | | MICROCIRCUIT,DI:DUAL D-TYPE FLIP-FLOP | 27014 | DM7474N |
| U231 | 156-0129-00 | | | MICROCIRCUIT,DI:QUAD 2-INPUT GATE | 01295 | SN7408N |
| U241 | 156-0030-00 | | | MICROCIRCUIT,DI:QUAD 2-INPUT POS NAND GATE | 01295 | SN7400N |
| U251 | 156-0120-00 | | | MICROCIRCUIT,DI:SINGLE 4-BIT R/L SHIFT REG | 01295 | SN7495AN |
| U311 | 156-0078-00 | | | MICROCIRCUIT,DI:4 TO 16 LINE DECODER | 01295 | SN74154N |
| U321 | 156-0047-00 | | | MICROCIRCUIT,DI:TPL 3-INPUT POS NAND GATE | 80009 | 156-0047-00 |
| U331 | 156-0058-00 | | | MICROCIRCUIT,DI:HEX.INVERTER | 01295 | SN7404N |
| U341 | 156-0041-00 | | | MICROCIRCUIT,DI:DUAL D-TYPE FLIP-FLOP | 27014 | DM7474N |
| U351 | 156-0120-00 | | | MICROCIRCUIT,DI:SINGLE 4-BIT R/L SHIFT REG | 01295 | SN7495AN |

CHASSIS PARTS

| | | | | | | |
|---|---|---|---|---|---|---|
| C1000 | 283-0358-00 | XB010573 | | CAP.,FXD,CER DI:0.01UF,+80-20%,1.4KV | 91418 | AU0103Z1421R0 |
| C1001 | 283-0358-00 | XB010573 | | CAP.,FXD,CER DI:0.01UF,+80-20%,1.4KV | 91418 | AU0103Z1421R0 |
| DS1040 | 150-1014-00 | | | LT EMITTING DIODE:RED,695NM,100MA MAX | 50522 | MV5054-1 |
| F1000 | 159-0034-00 | | | FUSE,CARTRIDGE:3AG,1.6A,125V,SLOW-BLOW | 71400 | MDL 1 6/10 |
| LS1001 | 119-0305-00 | | | LOUDSPEAKER,PM:PERMANENT MAGNET,45 OHM,2W | 07109 | 35A45C |
| R1001 | 307-0413-00 | XB010573 | | RES,NTWK,FXD,FI:3.3M OHM,10%,1W | 03888 | FL1-3304K-10% |
| R1050 | 311-1099-00 | | | RES.,VAR,NONWIR:100K OHM,0.5W | 01121 | WA1G040S104AZ |
| S1000 | 260-1113-00 | | | SWITCH,TOGGLE:DPST,6A,125V | 27193 | 870K-24H |
| S1010 | 260-1770-00 | | | SWITCH,ROTARY:TYPE F,2 SECT,9 POS,30 DEG | 80009 | 260-1770-00 |
| S1012[1] | 260-0449-00 | | | SWITCH,SLIDE:SPDT,0.5A,125VA-DC | 82389 | 11A-1030A |
| S1040[1] | 260-0448-00 | | | SWITCH,SLIDE:2P3P,0.5A,125V | 82389 | 11D1002 |
| T1001 | 120-1029-00 | | | XFMR,PWR,SDN&SU: | 80009 | 120-1029-00 |
| V1 | 154-0740-00 | | | ELECTRON TUBE:CRT | 80009 | 154-0740-00 |

[1]Option 1, 021-0173-00 only.

# Section 6

# DIAGRAMS AND CIRCUIT BOARD ILLUSTRATIONS

## Symbols and Reference Designators

Electrical components shown on the diagrams are in the following units unless noted otherwise:

Capacitors = Values one or greater are in picofarads (pF). Values less than one are in microfarads (μF).

Resistors = Ohms (Ω).

Graphic symbols and class designation letters are based on ANSI Standard Y32.2-1975.

Logic symbology is based on ANSI Y32.14-1973 in terms of positive logic. Logic symbols depict the logic function performed and may differ from the manufacturer's data.

Abbreviations are based on ANSI Y1.1-1972.

Other ANSI standards that are used in the preparation of diagrams by Tektronix, Inc. are:

| | |
|---|---|
| Y14.15, 1966 | Drafting Practices. |
| Y14.2, 1973 | Line Conventions and Lettering. |
| Y10.5, 1968 | Letter Symbols for Quantities Used in Electrical Science and Electrical Engineering. |

The following prefix letters are used as reference designators to identify components or assemblies on the diagrams.

| | | | | | |
|---|---|---|---|---|---|
| A | Assembly, separable or repairable (circuit board, etc) | H | Heat dissipating device (heat sink, heat radiator, etc) | S | Switch or contactor |
| AT | Attenuator, fixed or variable | HR | Heater | T | Transformer |
| B | Motor | HY | Hybrid circuit | TC | Thermocouple |
| BT | Battery | J | Connector, stationary portion | TP | Test point |
| C | Capacitor, fixed or variable | K | Relay | U | Assembly, inseparable or non-repairable (integrated circuit, etc.) |
| CB | Circuit breaker | L | Inductor, fixed or variable | V | Electron tube |
| CR | Diode, signal or rectifier | M | Meter | VR | Voltage regulator (zener diode, etc.) |
| DL | Delay line | P | Connector, movable portion | W | Wirestrap or cable |
| DS | Indicating device (lamp) | Q | Transistor or silicon-controlled rectifier | Y | Crystal |
| E | Spark Gap, Ferrite bead | R | Resistor, fixed or variable | Z | Phase shifter |
| F | Fuse | RT | Thermistor | | |
| FL | Filter | | | | |

The following special symbols may appear on the diagrams:

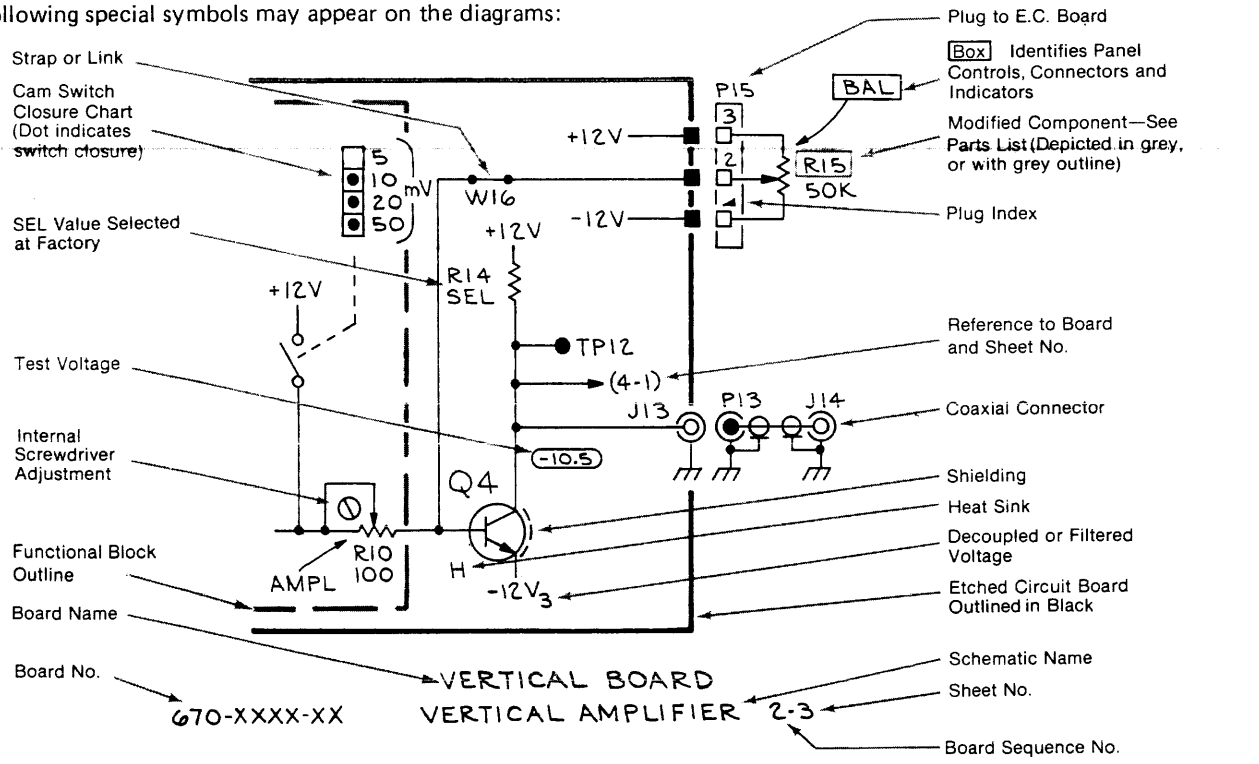

## 1. TRUE HIGH and TRUE LOW Signals

Signal names on the schematics are followed by −1 or −0. A TRUE HIGH signal is indicated by −1, and a TRUE LOW signal is indicated by −0.

SIGNAL−1 = TRUE HIGH
SIGNAL−0 = TRUE LOW

## 2. Cross-References

Schematic cross-references (from/to information) are included on the schematics. The "from" reference only indicates the signal "source," and the "to" reference lists all loads where the signal is used. All from/to information will be enclosed in parentheses.

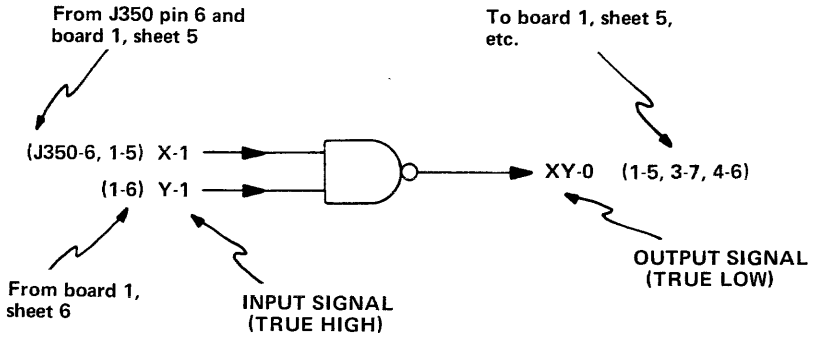

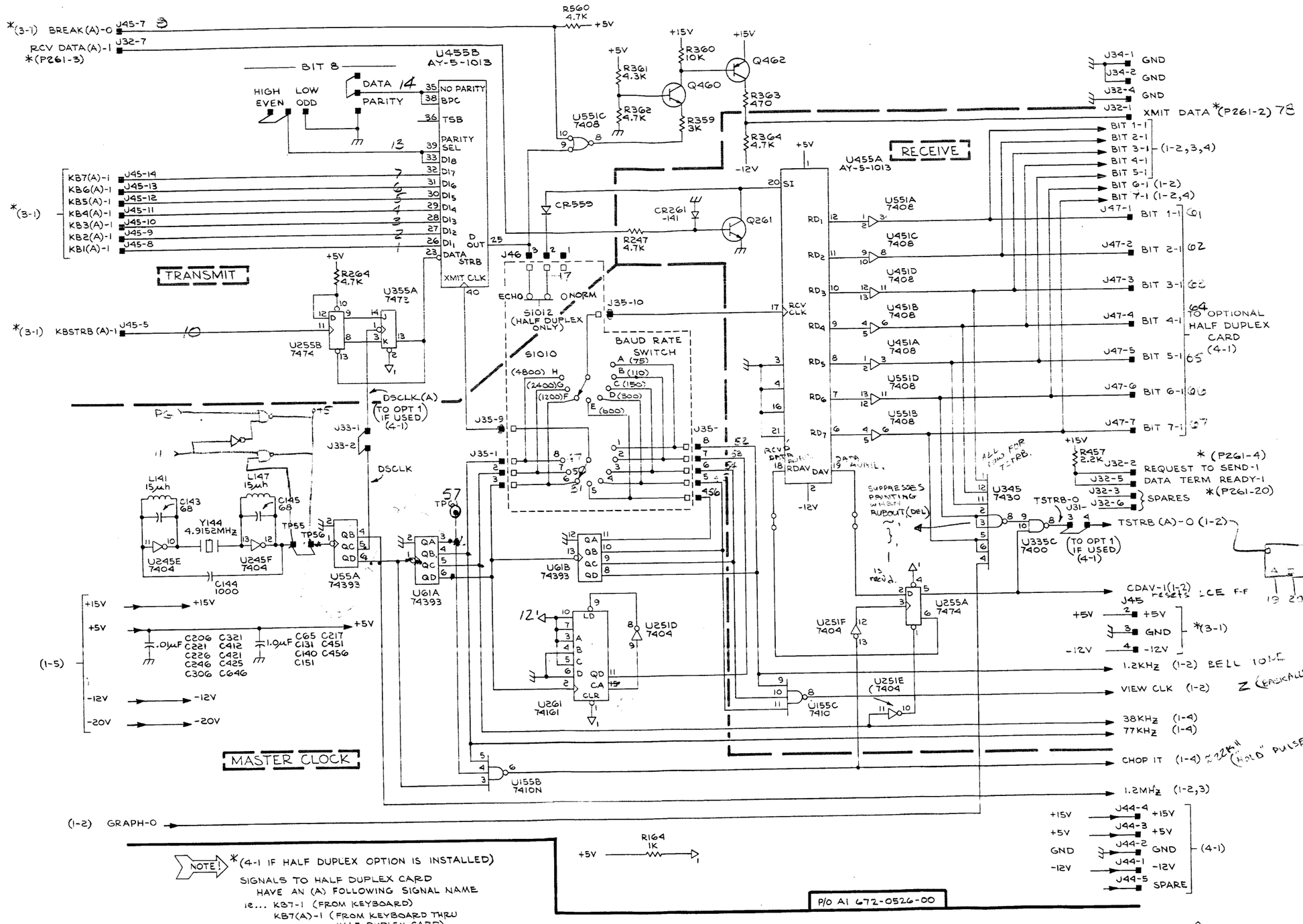


4006-1

1892-20
REV. B, OCT. 1977

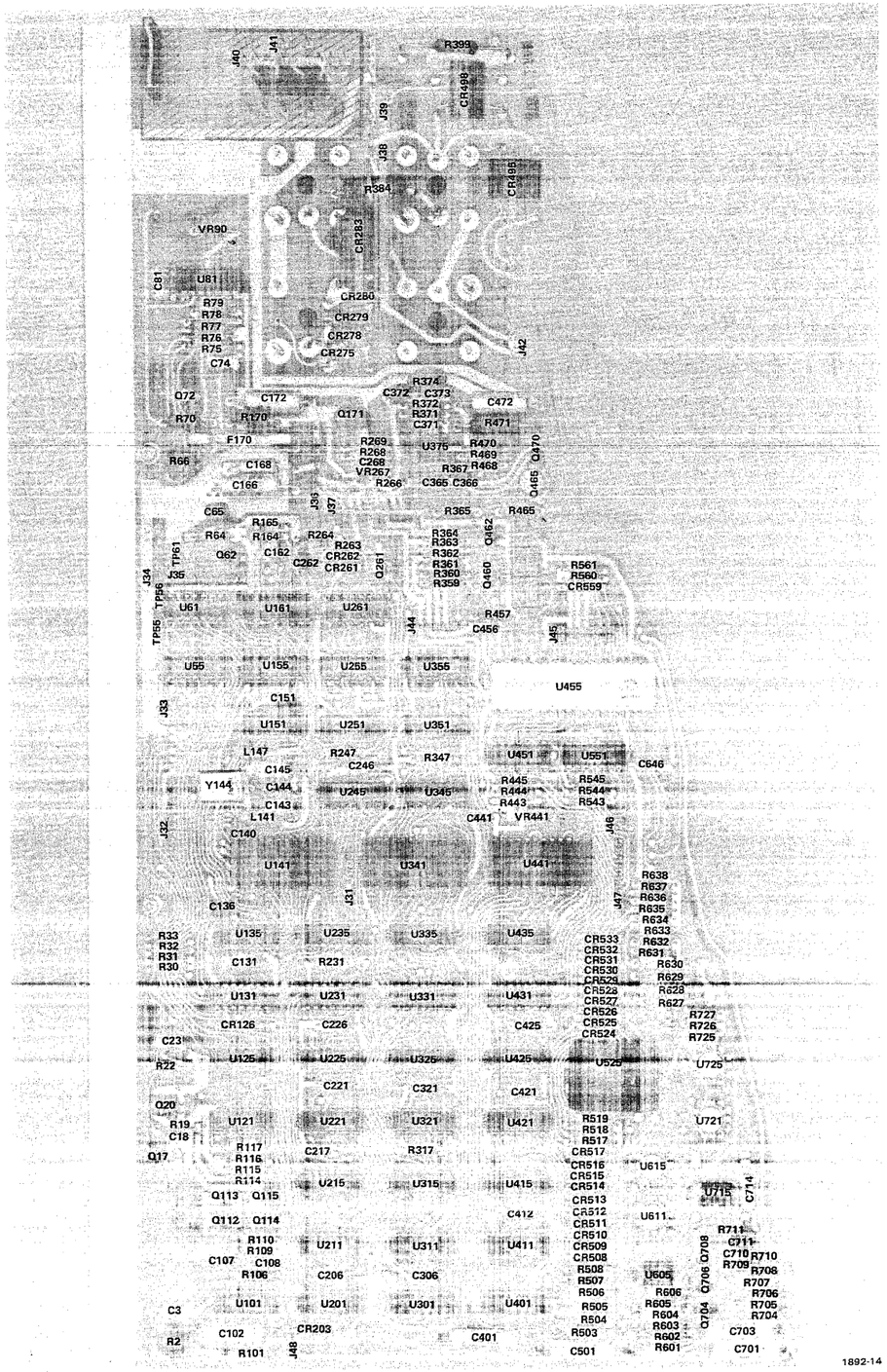


Fig. 6-1. 672-0526-00 Power Supply and Logic Board Components (Front View).

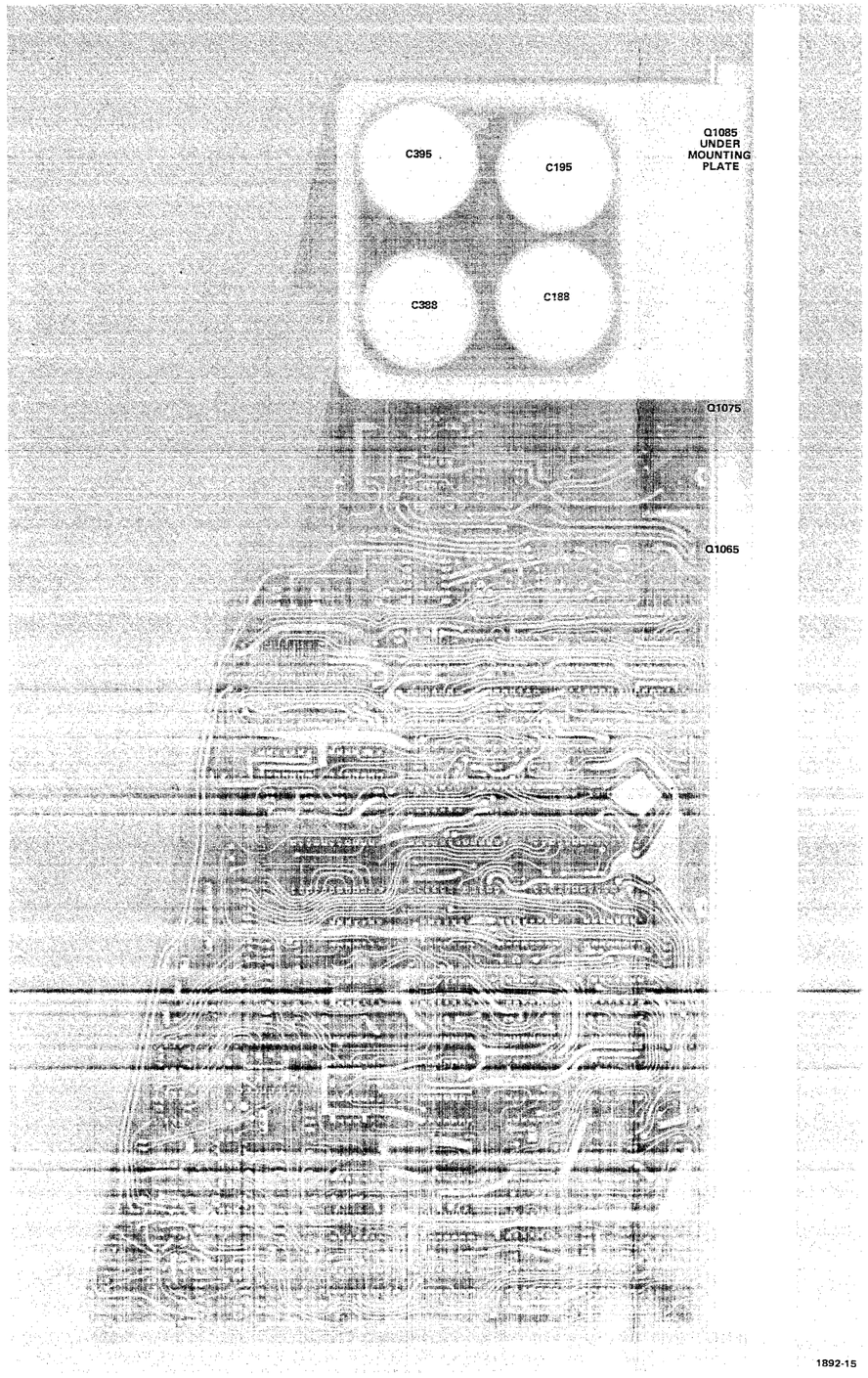


Fig. 6-2. 672-0526-00 Power Supply and Logic Board Components (Rear View).

X & Y REGISTER CONTROL

CONTROL CHARACTER DECODER

ALPHA/GRAPH FLIP/FLOP

COPY/COMMAND DECODER

BEL/ETB DECODE

VIEW/HOLD CONTROL

GRAPH BYTE CONTROL

BEL (SPEAKER) DRIVER

control characters:
LF LINE FEED
CR CARRIAGE RET.
GS SETS GRAPHICS
HT
US
ESC
FF

(1-1) 1.2MHz
(1-3) EOL-0
(1-4) CIP-0
DOWN & RIGHT
(1-1) CDAV-1
PAGE(A)-0 J45-1 *(3-1)
(1-1) TSTRB-0
(1-1) 1.2KHz
(1-1) VIEW CLOCK
SHIFT(A)-0 J45-6 *(3-1)
DRBUSY-0 J48-3 (2-2)

BIT 1-1 61
BIT 2-1 62
BIT 3-1 63
(1-1) BIT 4-1 64 (enable)
BIT 5-1 65
BIT 6-1 66
BIT 7-1 67

U211A 7473
U211B 7473
U215A 7474
U311 74177
U221B 7408
U221C 7408
U221A 7408
U331A 7408
U331B 7408
U225D 7400
U225C 7400
U225B 7400
U221D 7408
U391 74154
U251B 7404N
U245B 7404
U331C 7408
U331D 7408
U131C 7400
U355B 7473
U335B 7400C
U231B 7410
U245C 7404
U335A 7400C
U231C 741C
U201C 7408
U225A 740C
U235 74156
U351B DM8092
U351A DM8092
U251C 7404
U251A 7404
U125B 7408
U161B 74123
U125D 7408
U125C 7408
U161A 74123
U131D 7400
U251B 7404

R347 4.7K
R33 4.7K
R31 4.7K
R30 4.7K
R32 4.7K
R231 4.7K
R561 4.7K
R165 4.7M
R64 27K
R263 30K
R164 1K
R317 1K
C262 10μF
C162 68μF
C18 .01
R19 15
CR262
Q62
Q20
LSI001

LF-0
CR-0
GS-0
HT-0
US-0
FF-0
ESC-0
ESC FF
LCE
LAST CHAR. ESC
ESC ETB
75ms
805

DOWN-0 (1-3)
RIGHT-0 (1-3)
J31-1 LF-0
J31-2 CR-0
TO OPT. 1/2 DUPLEX (4-1) I/F CARD
CR-0 (1-3)
ALPHA-0 (1-1,3,4)
GS-0 (1-4)
GRAPH-0 (1-1,4)
ERASE-0 (1-3)
J48-4 ERASE-0 (2-2)
LOY-0 (1-3)
HIY-0 (1-3)
HIX-1 (1-3)
LOXE-0 (1-3,4)
ALPHA STB-0 (1-4) -21 +20
J48-7 COPY-0 (2-1)
J48-1
J36-6 +5V
HOLD-0 (1-4)
J48-2 VIEW-1 (2-2)

P/O A1 672-0526-00

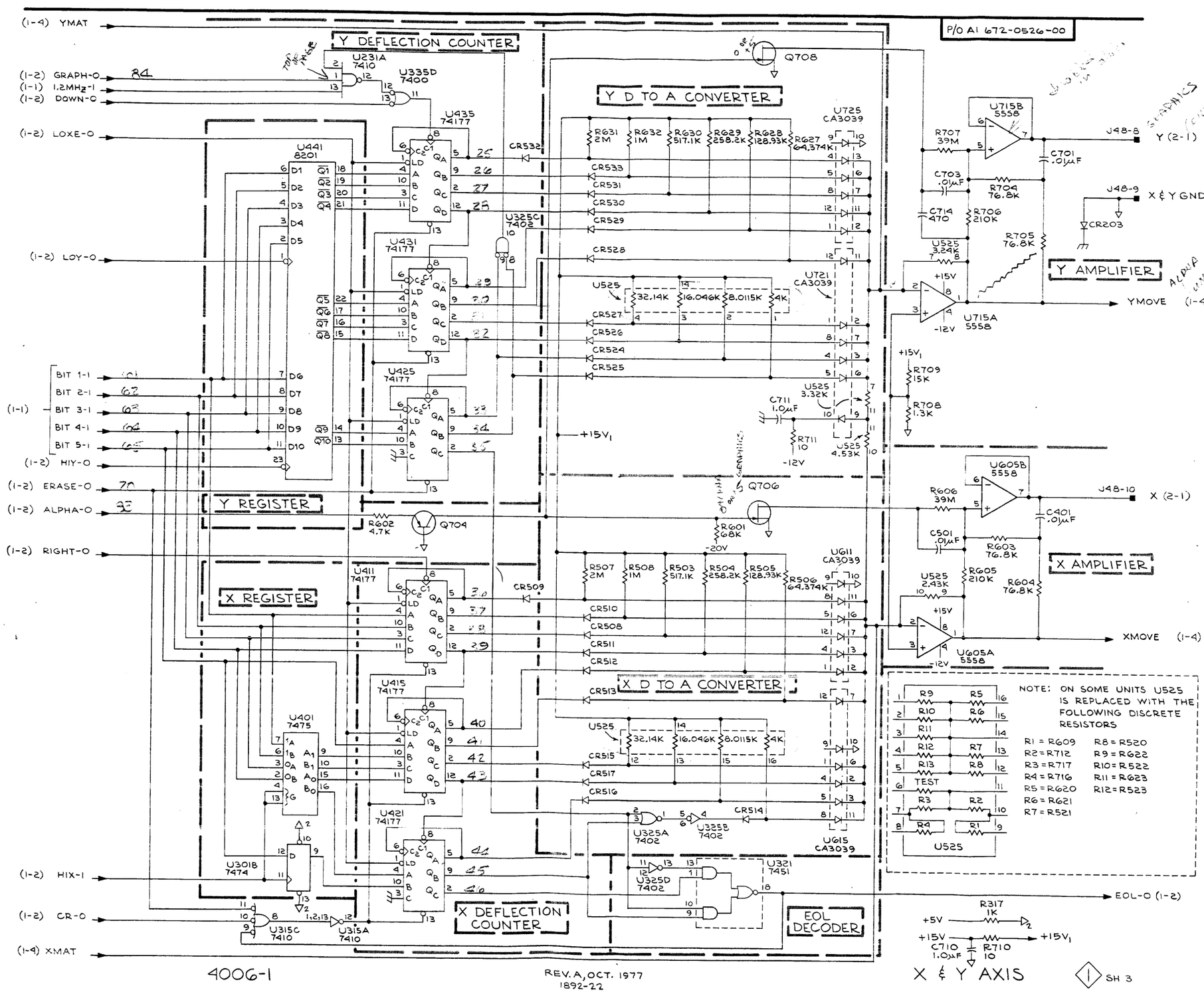


4006-1

REV. A, OCT. 1977
1892-22

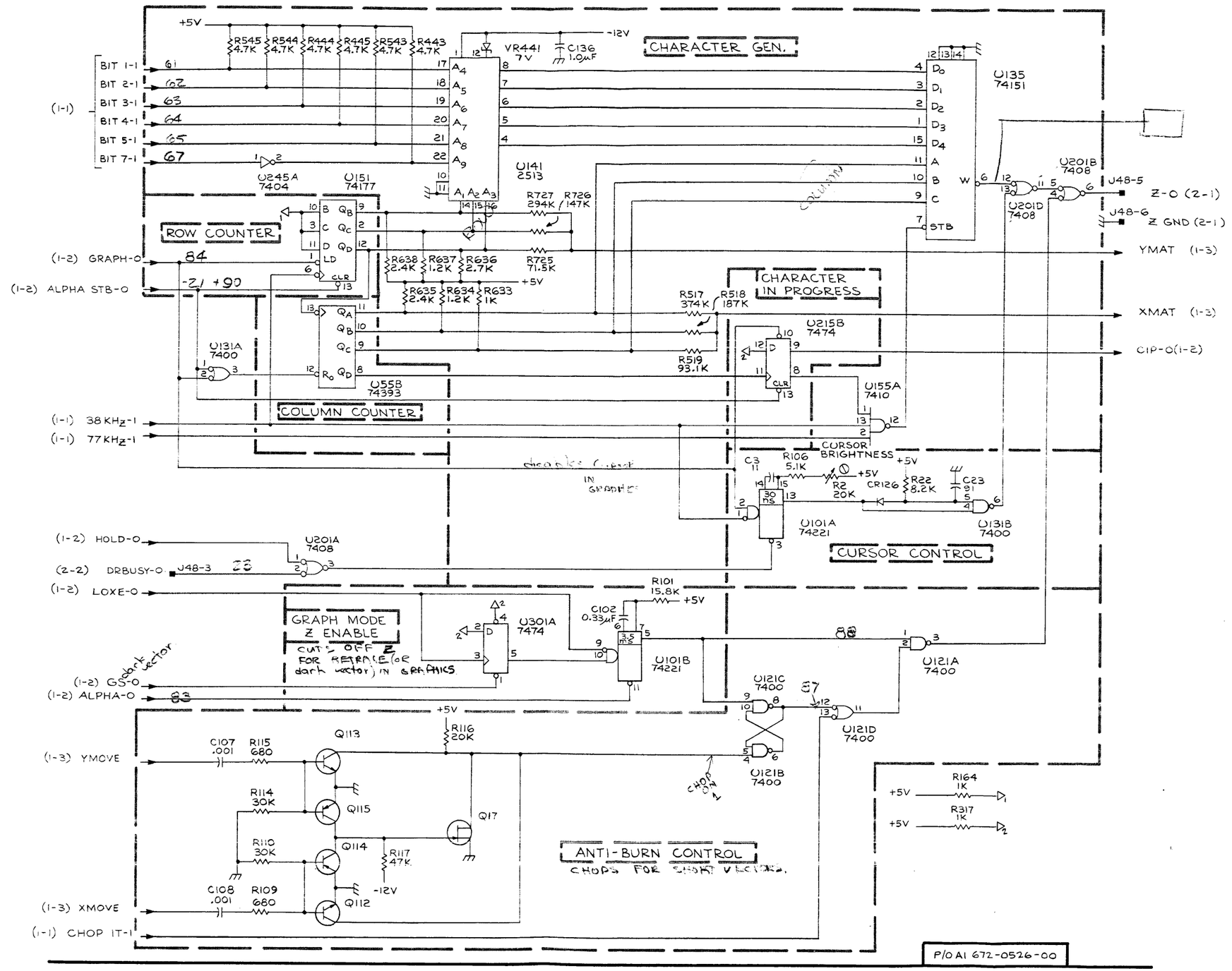


4006-1

REV. A, OCT. 1977
1892-23

Z AXIS 1 SH 4

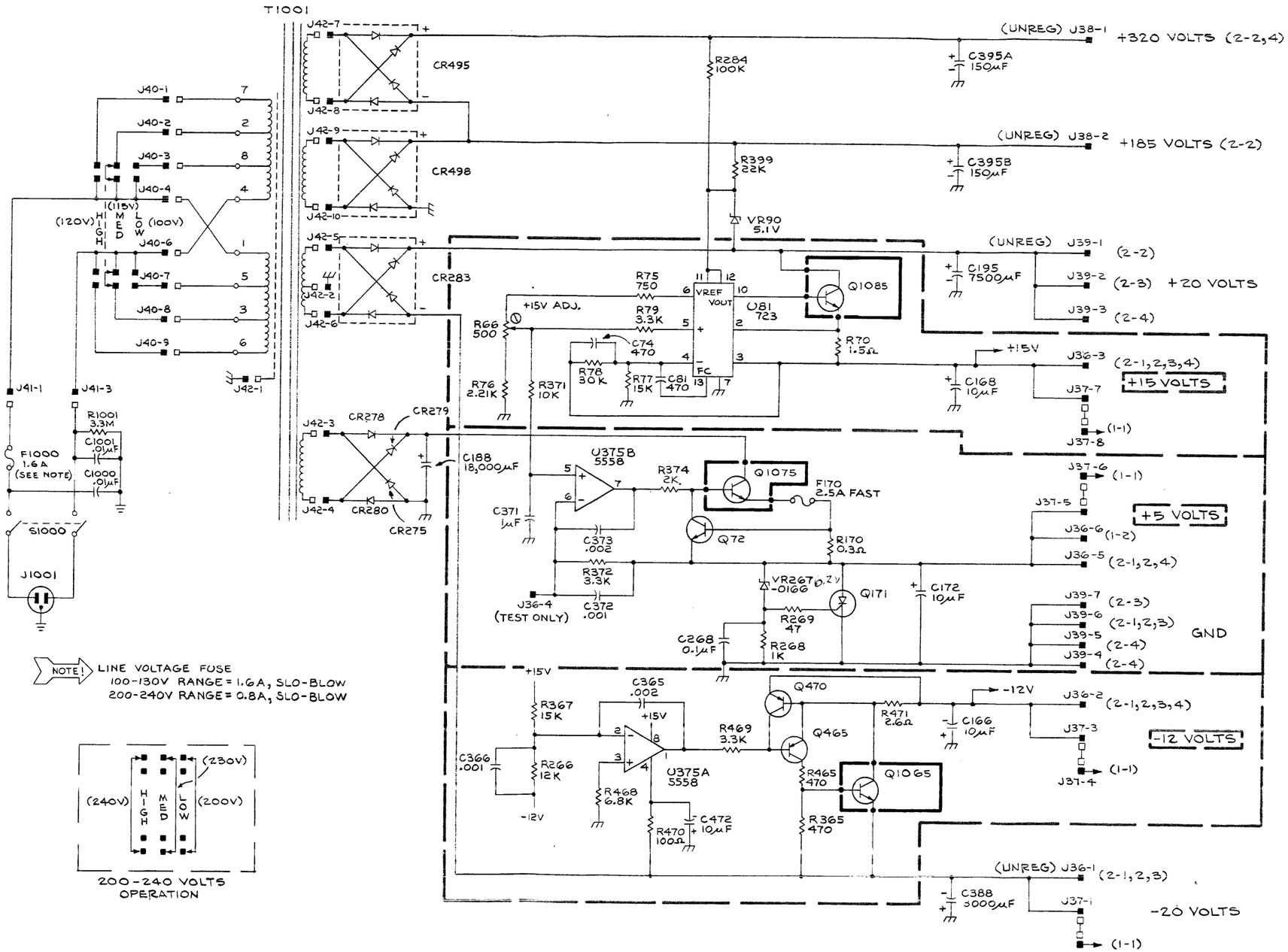




REV. A, OCT. 1977
1892-24

LOW VOLTAGE POWER SUPPLY ◇1 SH. 5

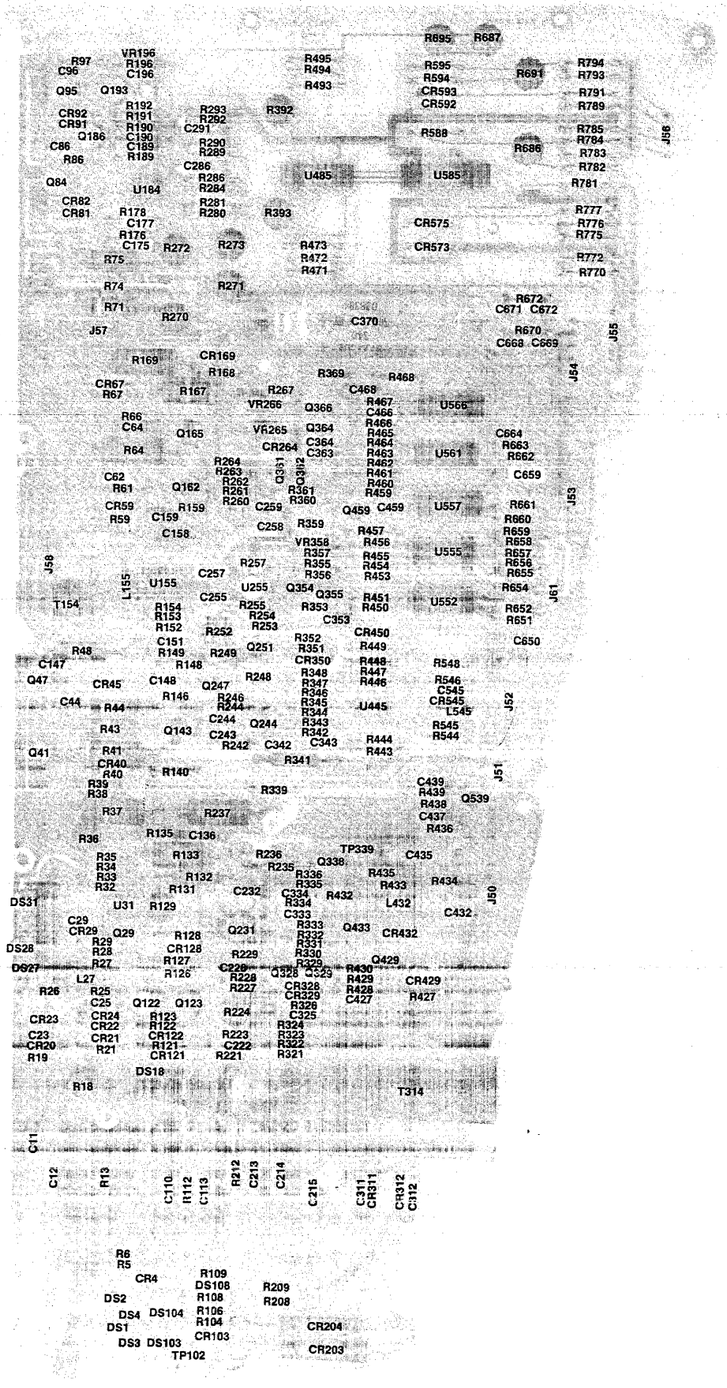


1892-33

Fig. 6-3a. 672-0537-05 & 06 Display Board Components (Front View).

1892-34

Fig. 6-3b. 672-0537-05 & 06 Display Board Components (Rear View).

@

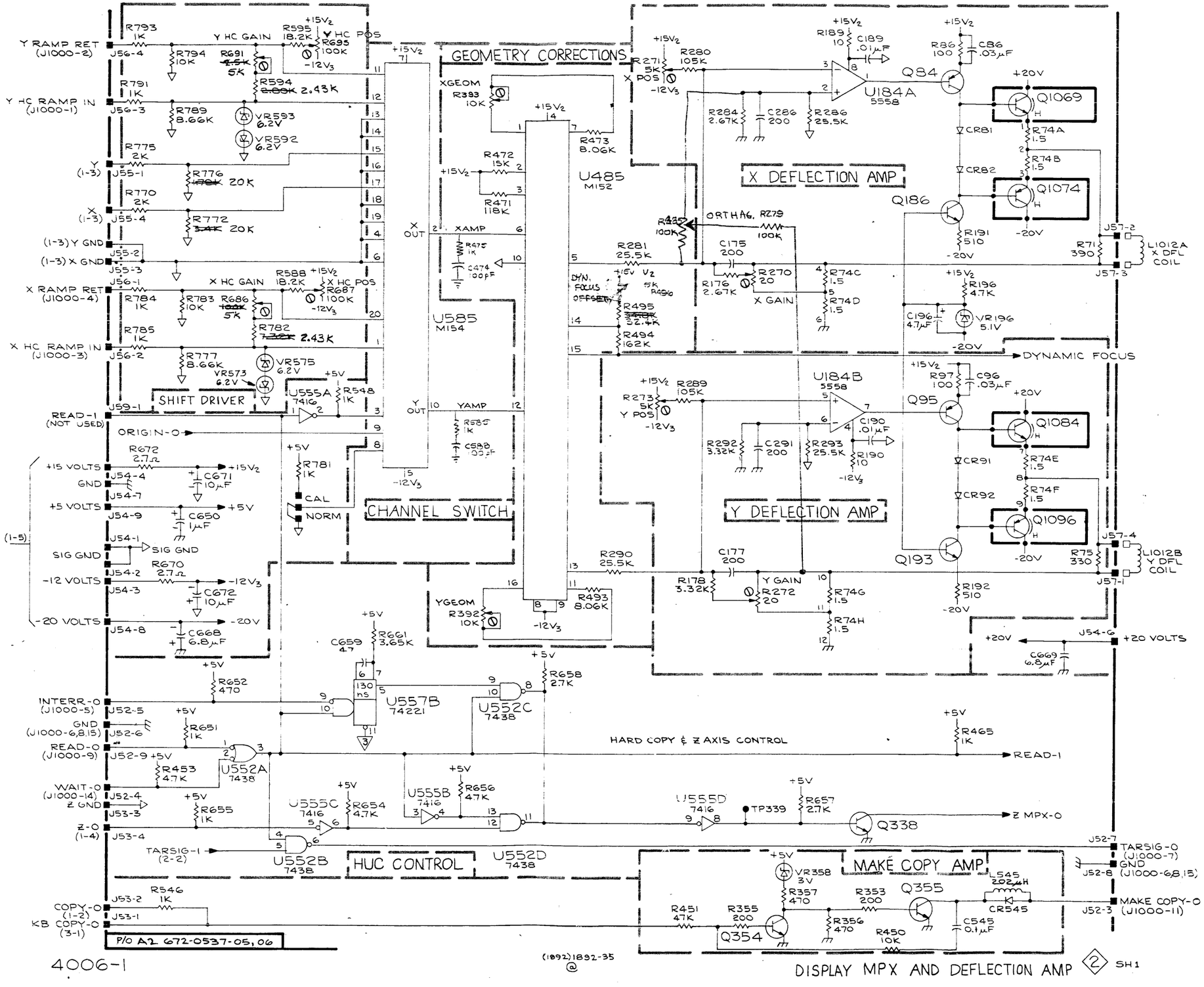
Y RAMP RET (J1000-2)
Y HC RAMP IN (J1000-1)
Y (1-3)
X (1-3)
(1-3) Y GND
(1-3) X GND
X RAMP RET (J1000-4)
X HC RAMP IN (J1000-3)
READ-1 (NOT USED)
+15 VOLTS
GND
+5 VOLTS
(1-5)
SIG GND
-12 VOLTS
-20 VOLTS
Y HC GAIN
Y HC POS
X HC GAIN
X HC POS
SHIFT DRIVER
ORIGIN-0
CAL
NORM
CHANNEL SWITCH
GEOMETRY CORRECTIONS
XGEOM
YGEOM
XAMP
YAMP
X OUT
Y OUT
U485 M152
U585 M154
X DEFLECTION AMP
Y DEFLECTION AMP
ORTHAG. R279
X GAIN
Y GAIN
DYN. FOCUS OFFSET
DYNAMIC FOCUS
L1012A X DFL COIL
L1012B Y DFL COIL
INTERR-0 (J1000-5)
GND (J1000-6,8,15)
READ-0 (J1000-9)
WAIT-0 (J1000-14)
Z GND
Z-0 (1-4)
TARSIG-1 (2-2)
COPY-0 (1-2)
KB COPY-0 (3-1)
HUC CONTROL
HARD COPY & Z AXIS CONTROL
READ-1
Z MPX-0
TARSIG-0 (J1000-7)
MAKE COPY-0 (J1000-11)
+20 VOLTS
MAKE COPY AMP
P/O A2 672-0537-05,06
(1892)1892-35
DISPLAY MPX AND DEFLECTION AMP
SH1
4006-1

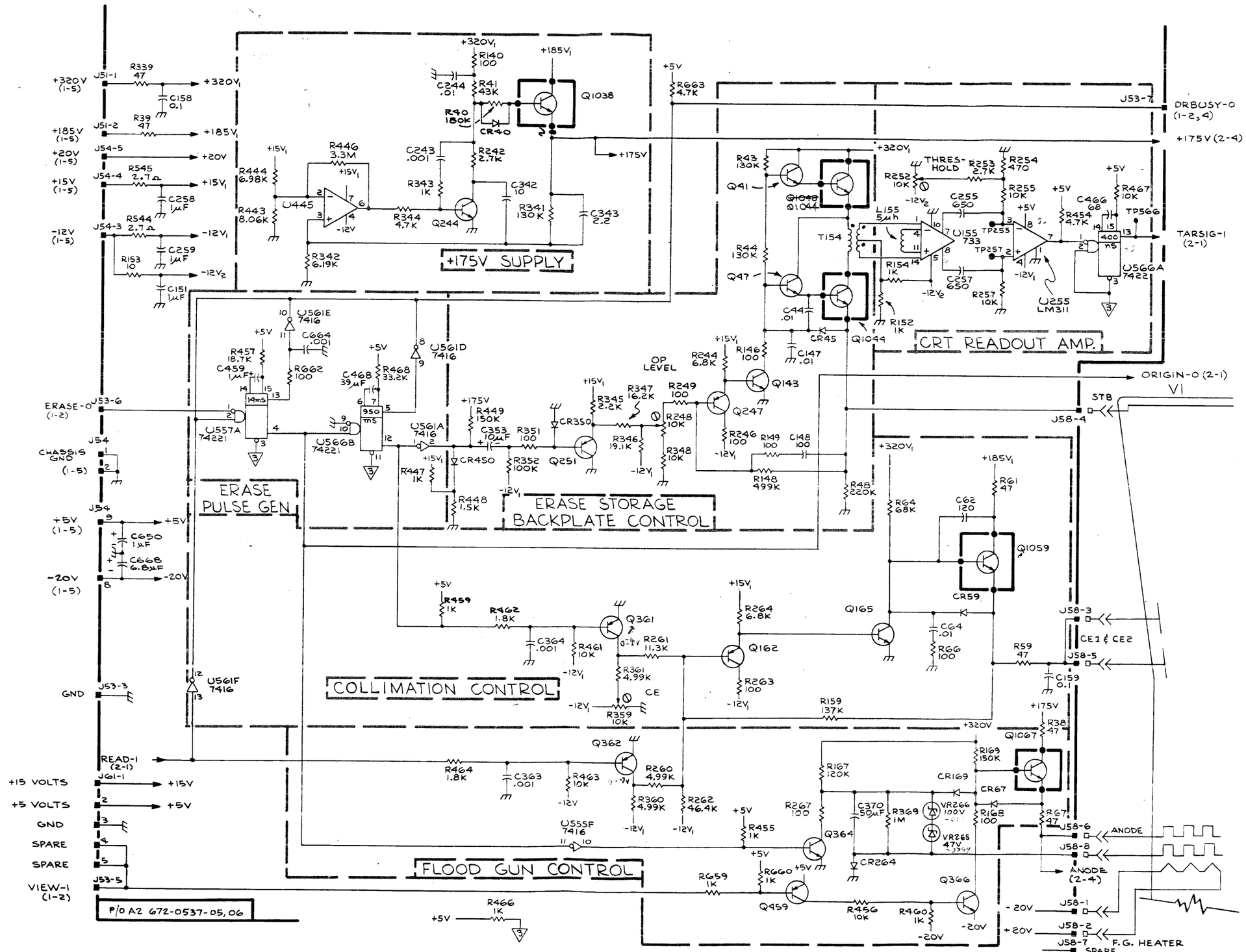


4006-1

(1892) 1892-36

@

C.R.T. READOUT, STORAGE & +175 VOLTS REGULATOR (2) SH 2

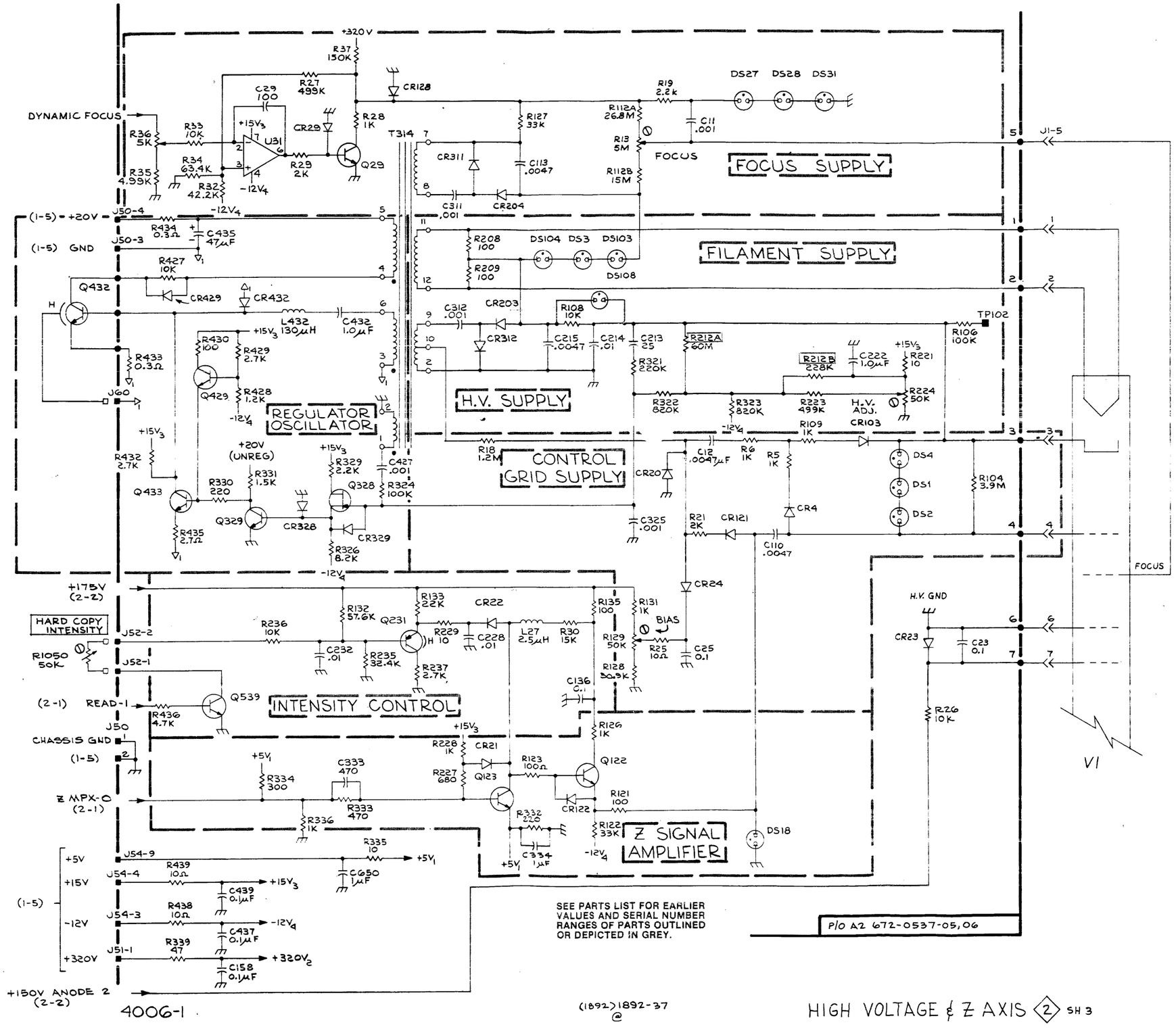
+320V
DYNAMIC FOCUS
R37 150K
R27 499K
C29 100
CR128
R28 1K
R33 10K
R34 63.4K
R32 42.2K
R36 5K
R35 4.99K
+15V3
U31
CR29
Q29
R29 2K
-12V4
T314
R127 33K
R112A 26.8M
R19 2.2K
DS27 DS28 DS31
C11 .001
R13 5M
R112B 15M
FOCUS
FOCUS SUPPLY
CR311
C113 .0047
C311 .001
CR204
J1-5
(1-5) = +20V
J50-4
J50-3
(1-5) GND
R434 0.3Ω
C435 47μF
R427 10K
R208 100
R209 100
DS104 DS3 DS103
DS108
FILAMENT SUPPLY
Q432
CR429
CR432
L432 130μH
C432 1.0μF
C312 .001
CR203
R108 10K
CR312
C215 .0047
C214 .01
C213 25
R212A 60M
R212B 228K
C222 1.0μF
R321 220K
R322 820K
R323 820K
R223 499K
H.V. ADJ.
R224 50K
R221 10
TP102
R106 100K
H.V. SUPPLY
R433 0.3Ω
J60
R430 100
R429 2.7K
Q429
R428 1.2K
REGULATOR OSCILLATOR
R109 1K
R18 1.2M
CONTROL GRID SUPPLY
C12 .0047μF
R6 1K
R5 1K
CR20
CR4
DS4
DS1
DS2
R104 3.9M
R432 2.7K
+20V (UNREG)
R330 220
R331 1.5K
Q433
Q329
R435 2.7Ω
CR328
CR329
R329 2.2K
Q328
R324 100K
R326 8.2K
C427 .001
C325 .001
R21 2K
CR121
C110 .0047
CR24
FOCUS
H.V. GND
CR23
C23 0.1
R26 10K
+175V (2-2)
HARD COPY INTENSITY
J52-2
J52-1
R1050 50K
R236 10K
R132 57.6K
R133 22K
CR22
Q231
R229 10
C228 .01
L27 2.5μH
R30 15K
R135 100
R131 1K
BIAS
R129 50K
R25 10Ω
C25 0.1
R128 3.9K
C232 .01
R235 32.4K
R237 2.7K
C136 .1
(2-1) READ-1
Q539
R436 4.7K
INTENSITY CONTROL
J50
CHASSIS GND
(1-5)
R126 1K
R228 1K
CR21
Q122
R123 100Ω
Q123
R227 680
+5V1
R334 300
C333 470
R333 470
R336 1K
Z MPX-O (2-1)
R121 100
CR122
R332 220
C334 1μF
R122 33K
DS18
Z SIGNAL AMPLIFIER
R335 10
J54-9
+5V
+5V1
C6650 1μF
J54-4
+15V
R439 10Ω
C439 0.1μF
+15V3
(1-5)
J54-3
-12V
R438 10Ω
C437 0.1μF
-12V4
J51-1
+320V
R339 47
C158 0.1μF
+320V2
+150V ANODE 2 (2-2)
VI
SEE PARTS LIST FOR EARLIER VALUES AND SERIAL NUMBER RANGES OF PARTS OUTLINED OR DEPICTED IN GREY.
P/O A2 672-0537-05,06
4006-1
(1892)1892-37
HIGH VOLTAGE & Z AXIS 2 SH 3

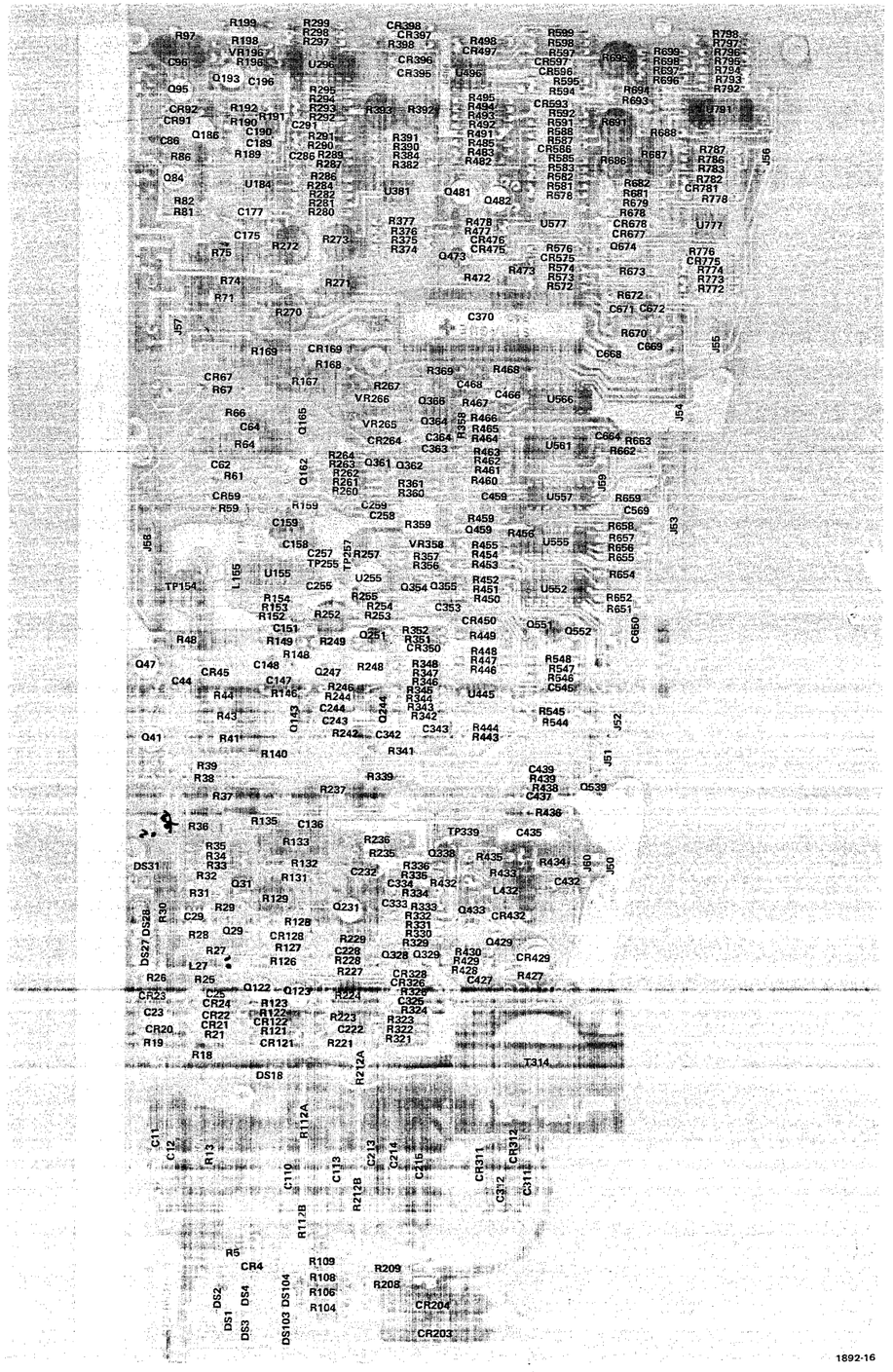


1892-16

Fig. 6-4a. 672-0537-00–04 Display Board Components (Front View).

1892-17

Fig. 6-4b. 672-0537-00–04 Display Board Components (Rear View).

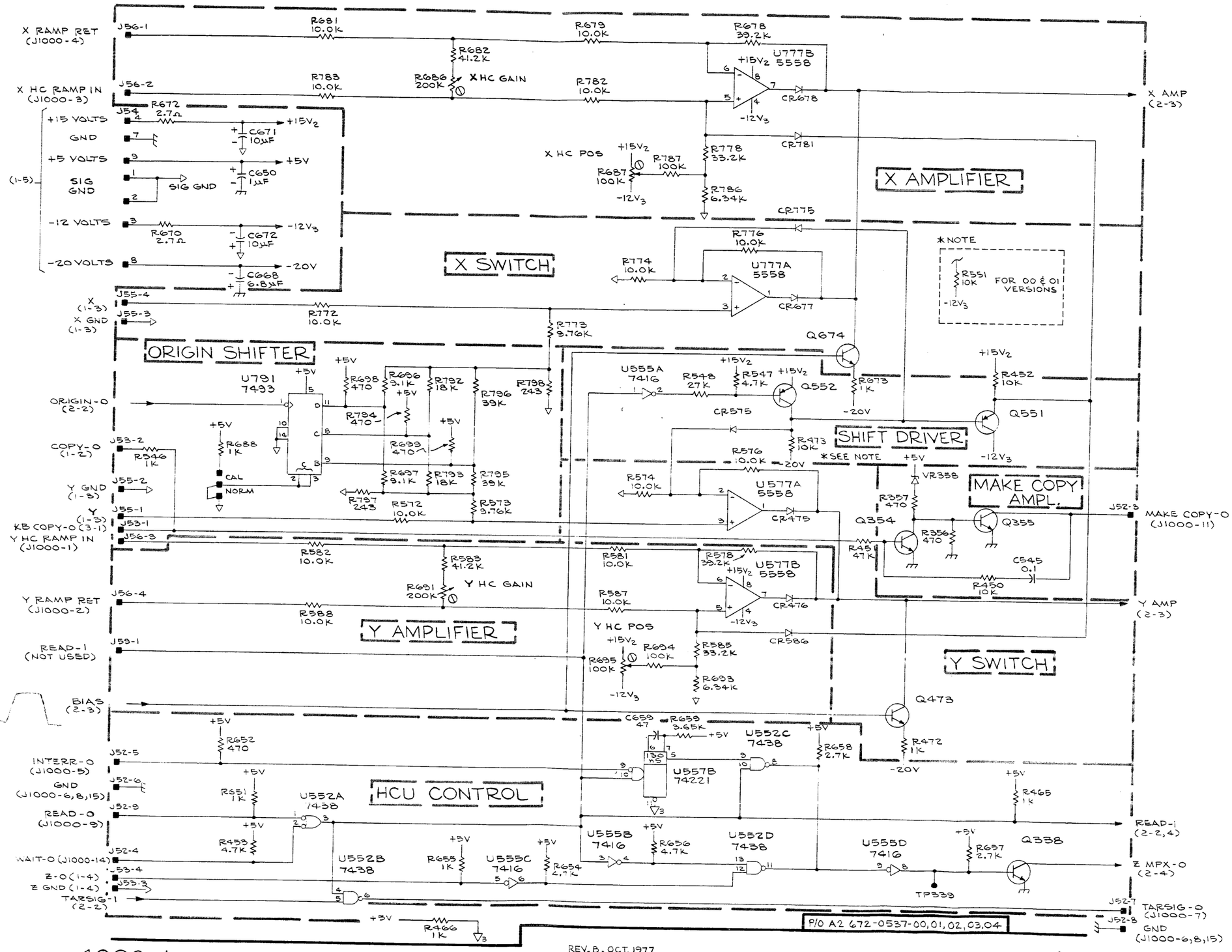


4006-1

REV. B, OCT. 1977
1892-25

DISPLAY MPX 2 SH 1

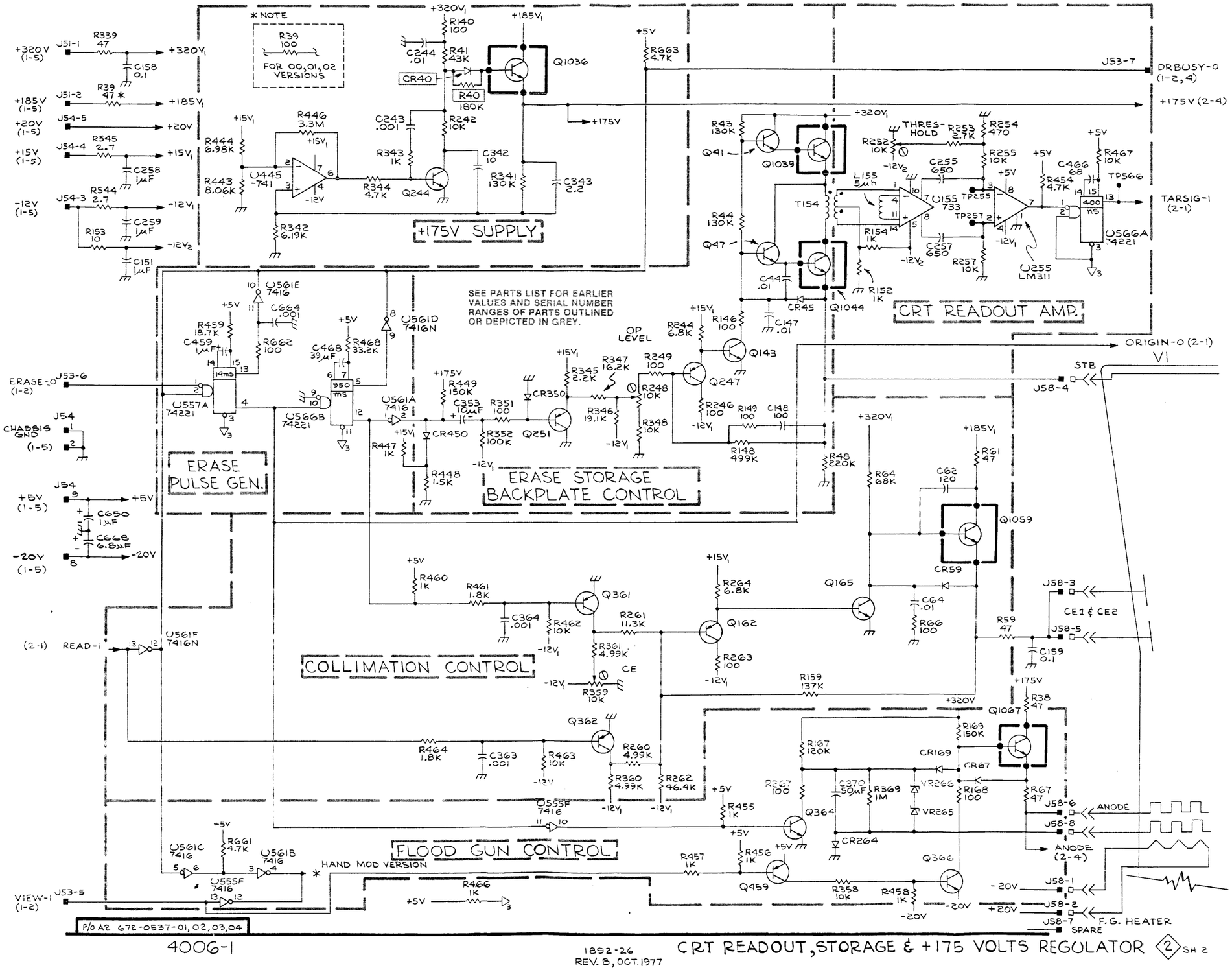


4006-1

1892-26
REV. B, OCT. 1977

# CRT READOUT, STORAGE & +175 VOLTS REGULATOR (2) SH 2

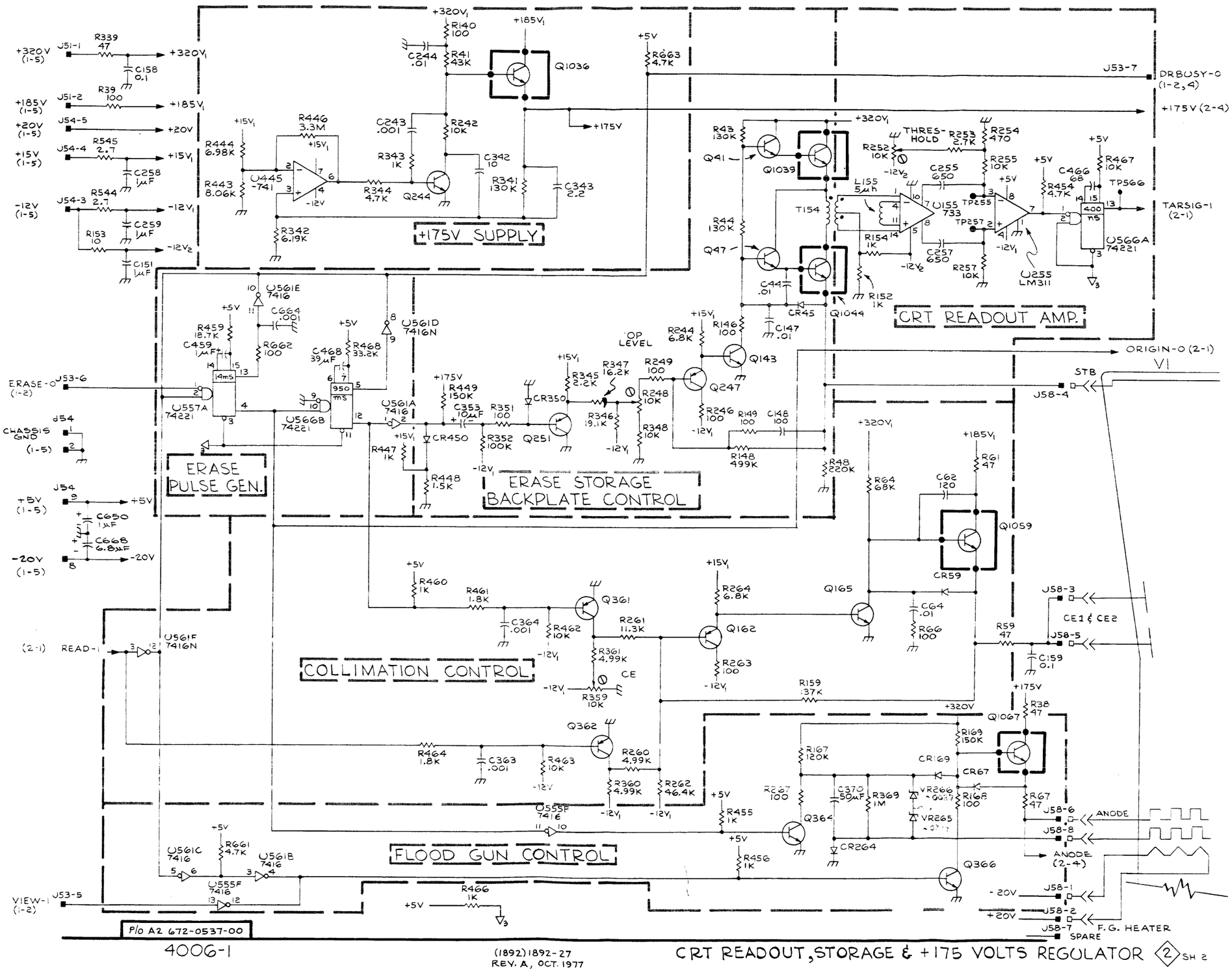
+320V (1-5)
J51-1
R339 47
C158 0.1
+320V1
+185V (1-5)
J51-2
R39 100
+185V1
+20V (1-5)
J54-5
+20V
+15V (1-5)
J54-4
R545 2.7
C258 1µF
+15V1
-12V (1-5)
J54-3
R544 2.7
C259 1µF
-12V1
R153 10
-12V2
C151 1µF
+320V1
R140 100
C244 .01
R41 43K
+185V1
Q1036
+175V
+5V
R663 4.7K
J53-7
DRBUSY-0 (1-2,4)
+175V (2-4)
+15V1
R444 6.98K
R443 8.06K
R446 3.3M
U445 741
R344 4.7K
Q244
C243 .001
R343 1K
R242 10K
C342 10
R341 130K
C343 2.2
R342 6.19K
+175V SUPPLY
+320V1
R43 130K
Q41
Q1039
THRES-HOLD
R253 2.7K
R254 470
R252 10K
-12V2
C255 650
R255 10K
+5V
C466 68
R454 4.7K
R467 10K
TP566
L155 5µh
T154
U155 733
TP255
TP257
R154 1K
C257 650
R257 10K
-12V1
U255 LM311
U566A 74221
TARSIG-1 (2-1)
R44 130K
Q47
C44 .01
CR45
Q1044
R152 1K
CRT READOUT AMP.
C147 .01
R146 100
R244 6.8K
Q143
TOP LEVEL
ORIGIN-0 (2-1)
STB
J58-4
VI
U561E 7416
C664 .001
R459 18.7K
C459 1µF
R662 100
14mS
U557A 74221
ERASE-0 (1-2)
J53-6
J54
CHASSIS GND (1-5)
ERASE PULSE GEN.
U561D 7416N
C468 39µF
R468 33.2K
950 mS
U566B 74221
U561A 7416
+175V
R449 150K
C353 10µF
R351 100
CR450
R352 100K
Q251
CR350
R345 2.2K
R347 16.2K
R346 19.1K
R249 100
R248 10K
R348 10K
Q247
R246 100
R149 100
C148 100
R148 499K
R447 1K
R448 1.5K
ERASE STORAGE BACKPLATE CONTROL
R48 220K
R64 68K
C62 120
R61 47
Q1059
CR59
+320V1
+185V1
J54
+5V (1-5)
C650 1µF
C668 6.8µF
-20V (1-5)
-20V
Q165
C64 .01
R66 100
J58-3
CE1 & CE2
J58-5
R59 47
C159 0.1
+175V
R38 47
Q1067
R169 150K
CR169
CR67
R167 120K
R267 100
C370 50µF
R369 1M
VR266 6.8V
VR265 6.8V
R168 100
R67 47
J58-6
ANODE
J58-8
ANODE (2-4)
J58-1
-20V
J58-2
+20V
J58-7
SPARE
F.G. HEATER
+5V
R460 1K
R461 1.8K
C364 .001
R462 10K
Q361
R261 11.3K
R264 6.8K
Q162
R263 100
R361 4.99K
CE
R359 10K
-12V1
R159 37K
+320V
COLLIMATION CONTROL
Q362
R464 1.8K
C363 .001
R463 10K
R260 4.99K
R262 46.4K
U555F 7416
R455 1K
R456 1K
Q364
CR264
Q366
(2-1) READ-1
U561F 7416N
U561C 7416
U561B 7416
U555F 7416
R661 4.7K
VIEW-1 (1-2)
J53-5
R466 1K
FLOOD GUN CONTROL
P/O A2 672-0537-00
4006-1
(1892)1892-27
REV. A, OCT. 1977
CRT READOUT, STORAGE & +175 VOLTS REGULATOR
2 SH 2

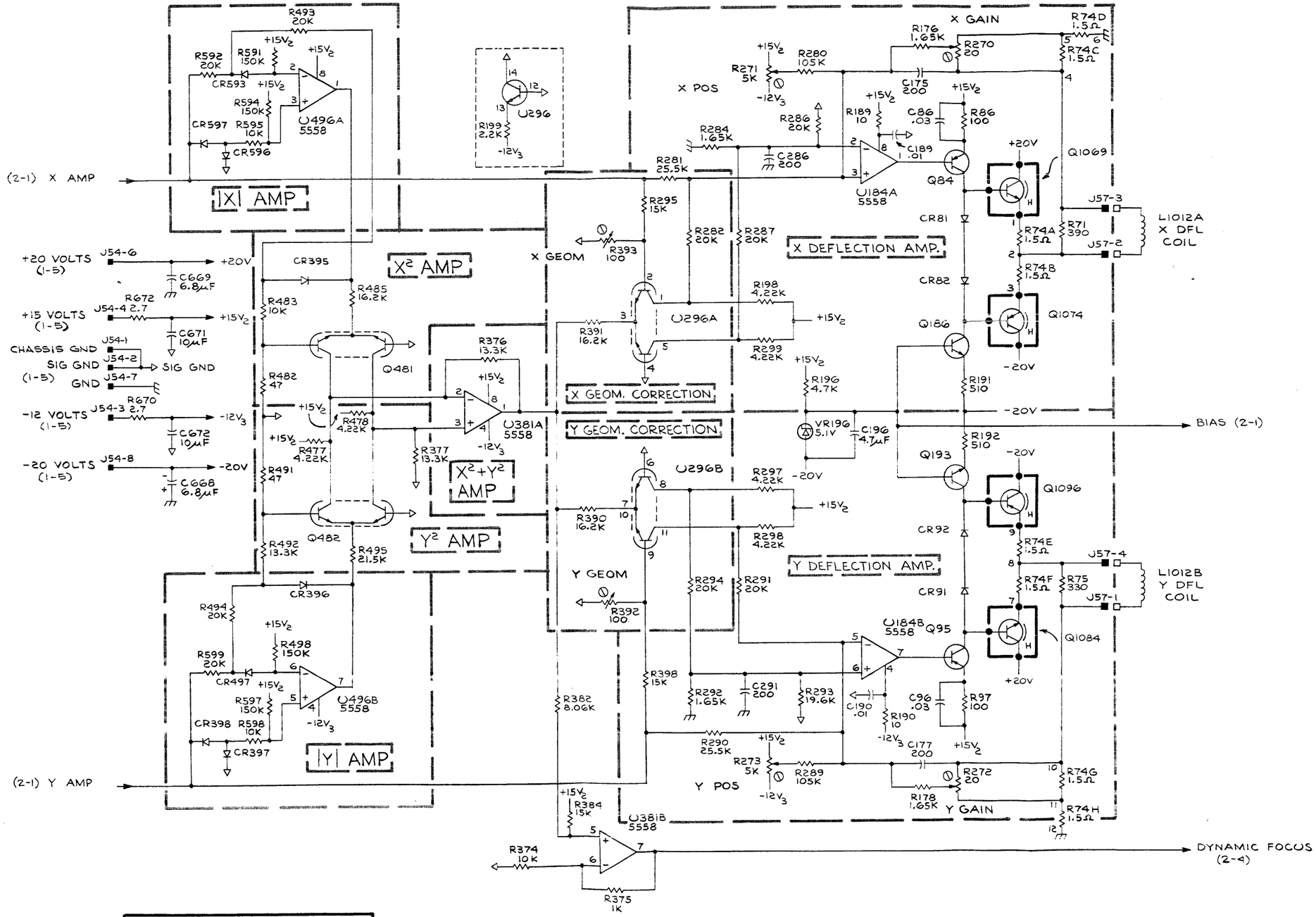


P/O A2 672-0537-00,01,02,03,04

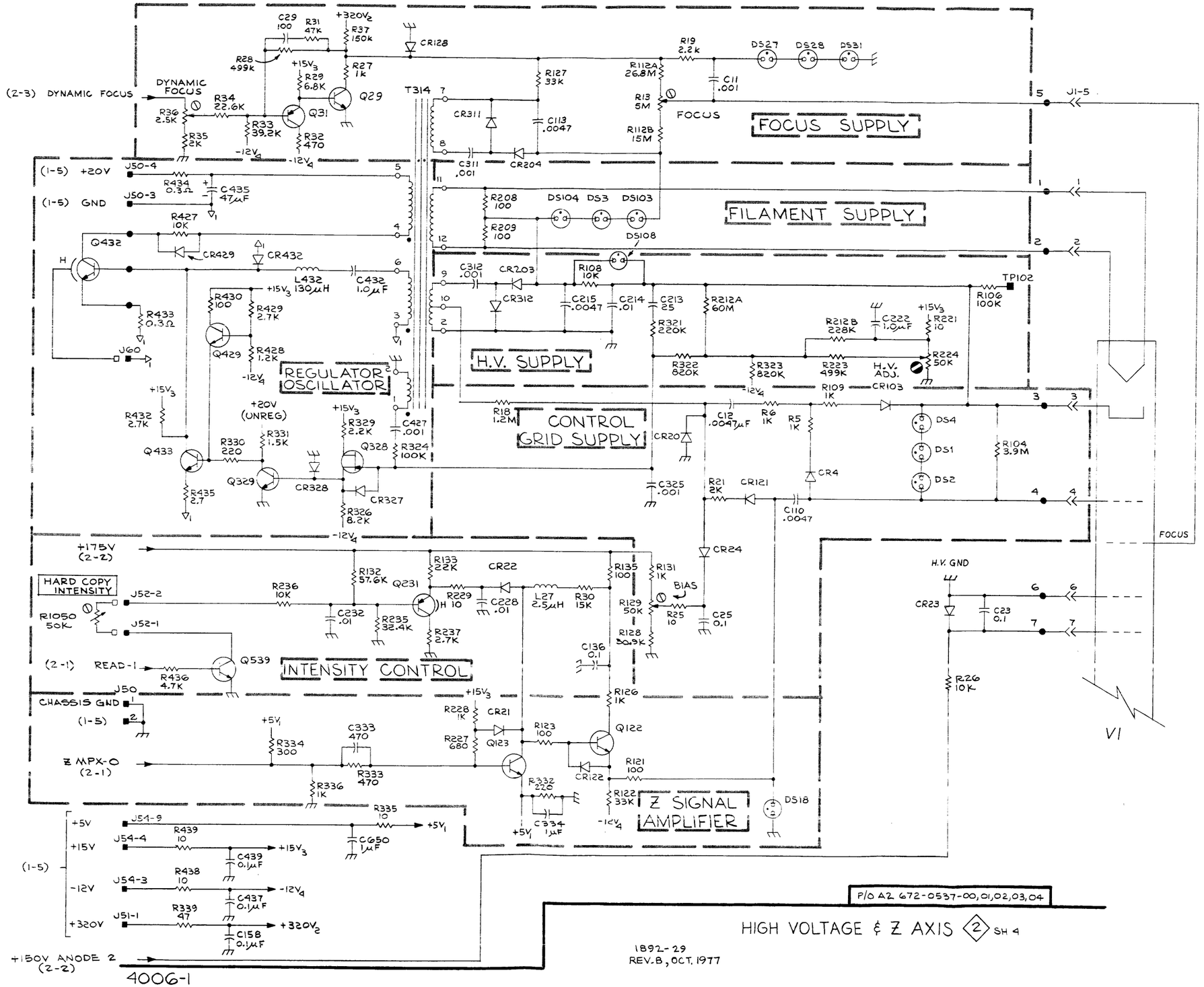
FOCUS SUPPLY
FILAMENT SUPPLY
H.V. SUPPLY
REGULATOR OSCILLATOR
CONTROL GRID SUPPLY
INTENSITY CONTROL
Z SIGNAL AMPLIFIER
DYNAMIC FOCUS
(2-3) DYNAMIC FOCUS
(1-5) +20V
(1-5) GND
+20V (UNREG)
+175V (2-2)
HARD COPY INTENSITY
(2-1) READ-1
CHASSIS GND
(1-5)
Z MPX-O (2-1)
+5V
+15V
-12V
+320V
+150V ANODE 2 (2-2)
FOCUS
H.V. GND
BIAS
H.V. ADJ.
V1
P/O A2 672-0537-00,01,02,03,04
HIGH VOLTAGE & Z AXIS 2 SH 4
1892-29
REV. B, OCT. 1977
4006-1

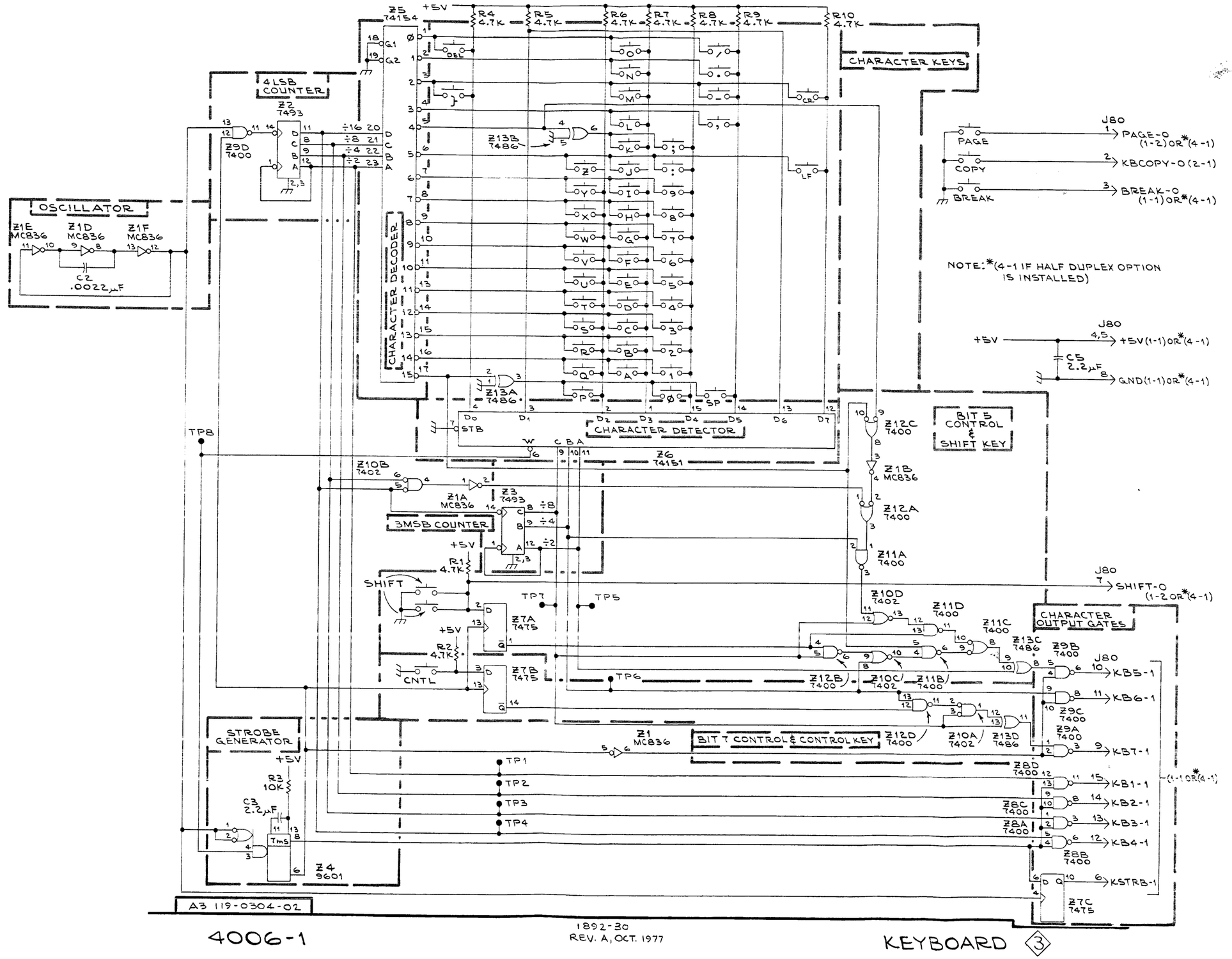


A3 119-0304-02

1892-30
REV. A, OCT. 1977

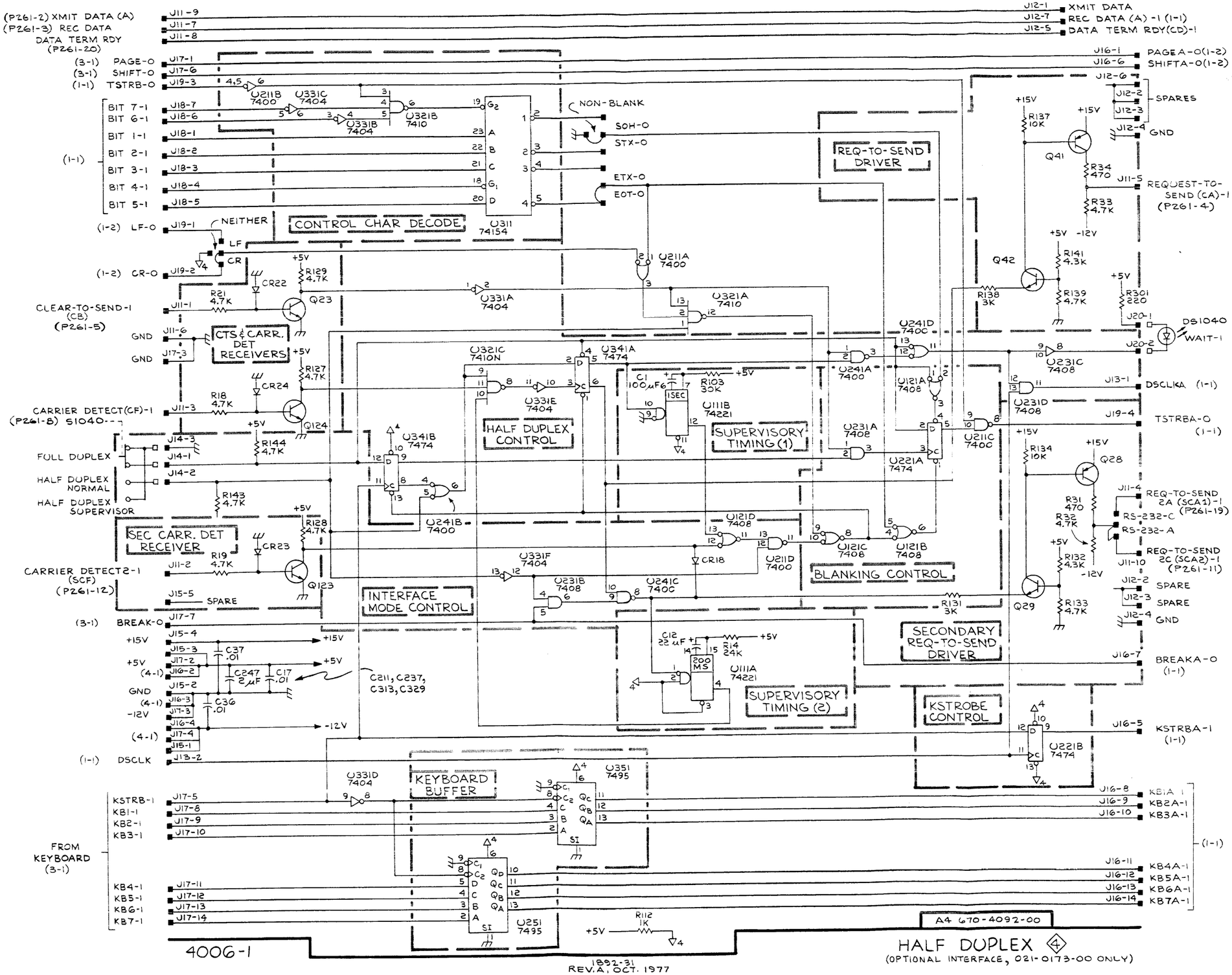
(P261-2) XMIT DATA (A)
(P261-3) REC DATA
DATA TERM RDY (P261-20)
(3-1) PAGE-O
(3-1) SHIFT-O
(1-1) TSTRB-O
(1-1) BIT 7-1
BIT 6-1
BIT 1-1
BIT 2-1
BIT 3-1
BIT 4-1
BIT 5-1
(1-2) LF-O
(1-2) CR-O
CLEAR-TO-SEND-1 (CB) (P261-5)
CARRIER DETECT(CF)-1 (P261-8)
FULL DUPLEX
HALF DUPLEX NORMAL
HALF DUPLEX SUPERVISOR
CARRIER DETECT2-1 (SCF) (P261-12)
(3-1) BREAK-O
+15V
+5V (4-1)
GND (4-1)
-12V (4-1)
(1-1) DSCLK
FROM KEYBOARD (3-1)
KSTRB-1
KB1-1
KB2-1
KB3-1
KB4-1
KB5-1
KB6-1
KB7-1
J12-1 XMIT DATA
J12-7 REC DATA (A) -1 (1-1)
J12-5 DATA TERM RDY(CD)-1
J16-1 PAGE A-O(1-2)
J16-6 SHIFTA-O(1-2)
J12-6
J12-2 SPARES
J12-3
J12-4 GND
J11-5 REQUEST-TO-SEND (CA)-1 (P261-4)
J20-1 DS1040 WAIT-1
J20-2
J13-1 DSCLKA (1-1)
J19-4 TSTRBA-O (1-1)
J11-4 REQ-TO-SEND 2A (SCA1)-1 (P261-19)
RS-232-C
RS-232-A
J11-10 REQ-TO-SEND 2C (SCA2)-1 (P261-11)
J12-2 SPARE
J12-3 SPARE
J12-4 GND
J16-7 BREAKA-O (1-1)
J16-5 KSTRBA-1 (1-1)
J16-8 KB1A-1
J16-9 KB2A-1
J16-10 KB3A-1
J16-11 KB4A-1
J16-12 KB5A-1
J16-13 KB6A-1
J16-14 KB7A-1
(1-1)
NON-BLANK
SOH-O
STX-O
ETX-O
EOT-O
NEITHER
U211B 7400
U331C 7404
U331B 7404
U321B 7410
U311 74154
CONTROL CHAR DECODE
U211A 7400
U331A 7404
U321A 7410
U241D 7400
U241A 7400
U231C 7408
U121A 7408
U231D 7408
U231A 7408
U211C 7400
U221A 7474
U221B 7474
REQ-TO-SEND DRIVER
Q41
R137 10K
R34 470
R33 4.7K
Q42
R141 4.3K
R138 3K
R139 4.7K
R301 220
Q28
R134 10K
R31 470
R32 4.7K
R132 4.3K
Q29
R133 4.7K
R131 3K
SECONDARY REQ-TO-SEND DRIVER
CR22
R21 4.7K
Q23
R129 4.7K
CR24
R18 4.7K
Q124
R144 4.7K
R143 4.7K
CR23
R19 4.7K
Q123
R128 4.7K
CTS & CARR. DET RECEIVERS
SEC CARR. DET RECEIVER
U331D 7404
KEYBOARD BUFFER
U351 7495
U251 7495
R112 1K
U341A 7474
U341B 7474
U241B 7400
U321C 7410N
U331E 7404
HALF DUPLEX CONTROL
C1 100μF6
R103 30K
U111B 74221
SUPERVISORY TIMING (1)
U121D 7408
U121C 7408
U121B 7408
U211D 7400
CR18
BLANKING CONTROL
U331F 7404
U231B 7408
U241C 7400
INTERFACE MODE CONTROL
C12 22μF
R14 24K
U111A 74221
SUPERVISORY TIMING (2)
KSTROBE CONTROL
C37 .01
C247 2μF
C17 .01
C36 .01
C211, C237, C313, C329
SPARE
J15-5
J15-4
J15-3
J17-2
J16-2
J15-2
J16-3
J17-3
J16-4
J17-4
J15-1
J11-1
J11-6
J17-1
J17-6
J19-3
J18-7
J18-6
J18-1
J18-2
J18-3
J18-4
J18-5
J19-1
J19-2
J11-3
J14-3
J14-1
J14-2
J11-2
J17-7
J17-5
J17-8
J17-9
J17-10
J17-11
J17-12
J17-13
J17-14
J11-7
J11-8
J11-9
A4 670-4092-00
HALF DUPLEX 4
(OPTIONAL INTERFACE, 021-0173-00 ONLY)
4006-1
1892-31
REV. A, OCT. 1977

# REPLACEABLE MECHANICAL PARTS

## PARTS ORDERING INFORMATION

Replacement parts are available from or through your local Tektronix, Inc. Field Office or representative.

Changes to Tektronix instruments are sometimes made to accommodate improved components as they become available, and to give you the benefit of the latest circuit improvements developed in our engineering department. It is therefore important, when ordering parts, to include the following information in your order: Part number, instrument type or number, serial number, and modification number if applicable.

If a part you have ordered has been replaced with a new or improved part, your local Tektronix, Inc. Field Office or representative will contact you concerning any change in part number.

Change information, if any, is located at the rear of this manual.

## SPECIAL NOTES AND SYMBOLS

| | |
|---|---|
| X000 | Part first added at this serial number |
| 00X | Part removed after this serial number |

## FIGURE AND INDEX NUMBERS

Items in this section are referenced by figure and index numbers to the illustrations.

## INDENTATION SYSTEM

This mechanical parts list is indented to indicate item relationships. Following is an example of the indentation system used in the description column.

*1 2 3 4 5* *Name & Description*

*Assembly and/or Component*
*Attaching parts for Assembly and/or Component*
- - - * - - -
*Detail Part of Assembly and/or Component*
*Attaching parts for Detail Part*
- - - * - - -
*Parts of Detail Part*
*Attaching parts for Parts of Detail Part*
- - - * - - -

Attaching Parts always appear in the same indentation as the item it mounts, while the detail parts are indented to the right. Indented items are part of, and included with, the next higher indentation. The separation symbol - - - * - - - indicates the end of attaching parts.

**Attaching parts must be purchased separately, unless otherwise specified.**

## ITEM NAME

In the Parts List, an Item Name is separated from the description by a colon (:). Because of space limitations, an Item Name may sometimes appear as incomplete. For further Item Name identification, the U.S. Federal Cataloging Handbook H6-1 can be utilized where possible.

# ABBREVIATIONS

| | |
|---|---|
| " | INCH |
| # | NUMBER SIZE |
| ACTR | ACTUATOR |
| ADPTR | ADAPTER |
| ALIGN | ALIGNMENT |
| AL | ALUMINUM |
| ASSEM | ASSEMBLED |
| ASSY | ASSEMBLY |
| ATTEN | ATTENUATOR |
| AWG | AMERICAN WIRE GAGE |
| BD | BOARD |
| BRKT | BRACKET |
| BRS | BRASS |
| BRZ | BRONZE |
| BSHG | BUSHING |
| CAB | CABINET |
| CAP | CAPACITOR |
| CER | CERAMIC |
| CHAS | CHASSIS |
| CKT | CIRCUIT |
| COMP | COMPOSITION |
| CONN | CONNECTOR |
| COV | COVER |
| CPLG | COUPLING |
| CRT | CATHODE RAY TUBE |
| DEG | DEGREE |
| DWR | DRAWER |
| ELCTRN | ELECTRON |
| ELEC | ELECTRICAL |
| ELCTLT | ELECTROLYTIC |
| ELEM | ELEMENT |
| EPL | ELECTRICAL PARTS LIST |
| EQPT | EQUIPMENT |
| EXT | EXTERNAL |
| FIL | FILLISTER HEAD |
| FLEX | FLEXIBLE |
| FLH | FLAT HEAD |
| FLTR | FILTER |
| FR | FRAME or FRONT |
| FSTNR | FASTENER |
| FT | FOOT |
| FXD | FIXED |
| GSKT | GASKET |
| HDL | HANDLE |
| HEX | HEXAGON |
| HEX HD | HEXAGONAL HEAD |
| HEX SOC | HEXAGONAL SOCKET |
| HLCPS | HELICAL COMPRESSION |
| HLEXT | HELICAL EXTENSION |
| HV | HIGH VOLTAGE |
| IC | INTEGRATED CIRCUIT |
| ID | INSIDE DIAMETER |
| IDENT | IDENTIFICATION |
| IMPLR | IMPELLER |
| IN | INCH |
| INCAND | INCANDESCENT |
| INSUL | INSULATOR |
| INTL | INTERNAL |
| LPHLDR | LAMPHOLDER |
| MACH | MACHINE |
| MECH | MECHANICAL |
| MTG | MOUNTING |
| NIP | NIPPLE |
| NON WIRE | NOT WIRE WOUND |
| OBD | ORDER BY DESCRIPTION |
| OD | OUTSIDE DIAMETER |
| OVH | OVAL HEAD |
| PH BRZ | PHOSPHOR BRONZE |
| PL | PLAIN or PLATE |
| PLSTC | PLASTIC |
| PN | PART NUMBER |
| PNH | PAN HEAD |
| PWR | POWER |
| RCPT | RECEPTACLE |
| RES | RESISTOR |
| RGD | RIGID |
| RLF | RELIEF |
| RTNR | RETAINER |
| SCH | SOCKET HEAD |
| SCOPE | OSCILLOSCOPE |
| SCR | SCREW |
| SE | SINGLE END |
| SECT | SECTION |
| SEMICOND | SEMICONDUCTOR |
| SHLD | SHIELD |
| SHLDR | SHOULDERED |
| SKT | SOCKET |
| SL | SLIDE |
| SLFLKG | SELF-LOCKING |
| SLVG | SLEEVING |
| SPR | SPRING |
| SQ | SQUARE |
| SST | STAINLESS STEEL |
| STL | STEEL |
| SW | SWITCH |
| T | TUBE |
| TERM | TERMINAL |
| THD | THREAD |
| THK | THICK |
| TNSN | TENSION |
| TPG | TAPPING |
| TRH | TRUSS HEAD |
| V | VOLTAGE |
| VAR | VARIABLE |
| W/ | WITH |
| WSHR | WASHER |
| XFMR | TRANSFORMER |
| XSTR | TRANSISTOR |

## CROSS INDEX—MFR. CODE NUMBER TO MANUFACTURER

| Mfr. Code | Manufacturer | Address | City, State, Zip |
|---|---|---|---|
| 01121 | ALLEN-BRADLEY COMPANY | 1201 2ND STREET SOUTH | MILWAUKEE, WI 53204 |
| 01295 | TEXAS INSTRUMENTS, INC., SEMICONDUCTOR GROUP | P O BOX 5012, 13500 N CENTRAL EXPRESSWAY | DALLAS, TX 75222 |
| 02735 | RCA CORPORATION, SOLID STATE DIVISION | ROUTE 202 | SOMERVILLE, NY 08876 |
| 03508 | GENERAL ELECTRIC COMPANY, SEMI-CONDUCTOR PRODUCTS DEPARTMENT | ELECTRONICS PARK | SYRACUSE, NY 13201 |
| 03888 | KDI PYROFILM CORPORATION | 60 S JEFFERSON ROAD | WHIPPANY, NJ 07981 |
| 04222 | AVX CERAMICS, DIVISION OF AVX CORP. | P O BOX 867, 19TH AVE. SOUTH | MURTLE BEACH, SC 29577 |
| 04713 | MOTOROLA, INC., SEMICONDUCTOR PROD. DIV. | 5005 E MCDOWELL RD,PO BOX 20923 | PHOENIX, AZ 85036 |
| 05347 | ULTRONIX, INC. | 461 N 22ND STREET | GRAND JUNCTION, CO 81501 |
| 07109 | OAKTRON INDUSTRIES, INC. | 704 30TH STREET | MONROE, WI 53566 |
| 07263 | FAIRCHILD SEMICONDUCTOR, A DIV. OF FAIRCHILD CAMERA AND INSTRUMENT CORP. | 464 ELLIS STREET | MOUNTAIN VIEW, CA 94042 |
| 07910 | TELEDYNE SEMICONDUCTOR | 12515 CHADRON AVE. | HAWTHORNE, CA 90250 |
| 08806 | GENERAL ELECTRIC CO., MINIATURE LAMP PRODUCTS DEPARTMENT | NELA PARK | CLEVELAND, OH 44112 |
| 14099 | SEMTECH CORP. | 652 MITCHELL RD. | NEWBURY PARK, CA 91320 |
| 14752 | ELECTRO CUBE INC. | 1710 S. DEL MAR AVE. | SAN GABRIEL, CA 91776 |
| 14939 | DELBAR PRODUCTS INC. | 7TH AND SPRUCE | PERKASIE, PA 18944 |
| 18324 | SIGNETICS CORP. | 811 E. ARQUES | SUNNYVALE, CA 94086 |
| 27014 | NATIONAL SEMICONDUCTOR CORP. | 2900 SEMICONDUCTOR DR. | SANTA CLARA, CA 95051 |
| 27193 | CUTLER-HAMMER, INC. SPECIALTY PRODUCTS DIVISION | 4201 N. 27TH ST. | MILWAUKEE, WI 53216 |
| 32159 | WEST-CAP ARIZONA | 2201 E. ELVIRA ROAD | TUCSON, AZ 85706 |
| 32293 | INTERSIL, INC. | 10900 N. TANTAU AVE. | CUPERTINO, CA 95014 |
| 32997 | BOURNS, INC., TRIMPOT PRODUCTS DIV. | 1200 COLUMBIA AVE. | RIVERSIDE, CA 92507 |
| 50522 | MONSANTO CO., ELECTRONIC SPECIAL PRODUCTS | 3400 HILLVIEW AVENUE | PALO ALTO, CA 94304 |
| 50558 | ELECTRONIC CONCEPTS, INC. | 526 INDUSTRIAL WAY WEST | EATONTOWN, NJ 07724 |
| 56289 | SPRAGUE ELECTRIC CO. | | NORTH ADAMS, MA 01247 |
| 71400 | BUSSMAN MFG., DIVISION OF MCGRAW-EDISON CO. | 2536 W. UNIVERSITY ST. | ST. LOUIS, MO 63107 |
| 72982 | ERIE TECHNOLOGICAL PRODUCTS, INC. | 644 W. 12TH ST. | ERIE, PA 16512 |
| 73138 | BECKMAN INSTRUMENTS, INC., HELIPOT DIV. | 2500 HARBOR BLVD. | FULLERTON, CA 92634 |
| 75042 | TRW ELECTRONIC COMPONENTS, IRC FIXED RESISTORS, PHILADELPHIA DIVISION | 401 N. BROAD ST. | PHILADELPHIA, PA 19108 |
| 76493 | BELL INDUSTRIES, INC., MILLER, J. W., DIV. | 19070 REYES AVE., P O BOX 5825 | COMPTON, CA 90224 |
| 80009 | TEKTRONIX, INC. | P O BOX 500 | BEAVERTON, OR 97077 |
| 81483 | INTERNATIONAL RECTIFIER CORP. | 9220 SUNSET BLVD. | LOS ANGELES, CA 90069 |
| 82389 | SWITCHCRAFT, INC. | 5555 N. ELSTON AVE. | CHICAGO, IL 60630 |
| 83003 | VARO, INC. | P O BOX 411, 2203 WALNUT STREET | GARLAND, TX 75040 |
| 84411 | TRW ELECTRONIC COMPONENTS, TRW CAPACITORS | 112 W. FIRST ST. | OGALLALA, NE 69153 |
| 86684 | RCA CORP., ELECTRONIC COMPONENTS DIV. | 415 S. 5TH STREET | HARRISON, NJ 07029 |
| 90201 | MALLORY CAPACITOR CO., DIV. OF P. R. MALLORY AND CO., INC. | 3029 E WASHINGTON STREET P O BOX 372 | INDIANAPOLIS, IN 46206 |
| 91418 | RADIO MATERIALS COMPANY, DIV. OF P.R. MALLORY AND COMPANY, INC. | 4242 W BRYN MAWR | CHICAGO, IL 60646 |
| 91637 | DALE ELECTRONICS, INC. | P. O. BOX 609 | COLUMBUS, NE 68601 |

| Fig. & Index No. | Tektronix Part No. | Serial/Model No. Eff | Dscont | Qty | 1 2 3 4 5 | Name & Description | Mfr Code | Mfr Part Number |
|---|---|---|---|---|---|---|---|---|
| 1-1 | 386-3490-00 | | | 1 | | LATCH,PLATE:LEFT | 80009 | 386-3490-00 |
| | 386-3491-00 | | | 1 | | LATCH,PLATE:RIGHT | 80009 | 386-3491-00 |
| | | | | | | (ATTACHING PARTS FOR EACH) | | |
| -2 | 212-0040-00 | | | 1 | | SCREW,MACHINE:8-32 X 0.375 100 DEG,FLH STL | 83385 | OBD |
| | | | | | | - - - * - - - | | |
| -3 | 343-0562-00 | | | 1 | | RETAINER,CAB.:RIGHT | 80009 | 343-0562-00 |
| | 343-0563-00 | | | 1 | | RETAINER,CAB.:LEFT | 80009 | 343-0563-00 |
| | | | | | | (ATTACHING PARTS FOR EACH) | | |
| | 212-0557-00 | | | 1 | | SCREW,MACHINE:10-32 X 0.50 INCH,RDH SST | 72113 | OBD |
| | | | | | | - - - * - - - | | |
| -5 | 390-0476-01 | | | 1 | | CAB.TOP,TERM: | 80009 | 390-0476-01 |
| | | | | | | (ATTACHING PARTS) | | |
| | 212-0557-00 | | | 4 | | SCREW,MACHINE:10-32 X 0.50 INCH,RDH SST | 72113 | OBD |
| | | | | | | - - - * - - - | | |
| | 021-0173-00[1] | | | 1 | | INTERFACE:HALF DUPLEX | 80009 | 021-0173-00 |
| | 012-0645-00 | | | 1 | | . CABLE,INTCON:196.0 INCH LONG | 80009 | 012-0645-00 |
| | | | | | | (ATTACHING PARTS) | | |
| -6 | 211-0581-00 | | | 2 | | . SCREW,MACHINE:6-32 X 0.375 INCH,TRH STL | 83385 | OBD |
| | | | | | | - - - * - - - | | |
| | ----- ----- | | | - | | . . CABLE ASSEMBLY INCLUDES: | | |
| -7 | 131-1159-00 | | | 1 | | . . CONTACT,ELEC:QUICK-DISCONNECT,W/INSUL | 00779 | 60041-2 |
| -8 | 131-1191-00 | | | 1 | | . . CONTACT,ELEC:FOR 0.25 INCH WD CONN | 00779 | 42822-2 |
| | | | | | | (ATTACHING PARTS) | | |
| -9 | 210-0457-00 | | | 1 | | . . NUT,PLAIN,EXT W:6-32 X 0.312 INCH,STL | 83385 | OBD |
| | | | | | | - - - * - - - | | |
| -10 | ----- ----- | | | 2 | | . . SWITCH,SLIDE:(SEE S1012,S1040 EPL) | | |
| | | | | | | (ATTACHING PARTS FOR EACH) | | |
| -11 | 210-0406-00 | | | 2 | | . . NUT,PLAIN,HEX.:4-40 X 0.188 INCH,BRS | 73743 | 2X12161-402 |
| -12 | 210-0003-00 | | | 2 | | . . WASHER,LOCK:EXT,0.123 ID X 0.245" OD,STL | 78189 | 1104-00-00-0541C |
| | | | | | | - - - * - - - | | |
| -13 | 200-1667-00 | | | 1 | | . . COVER,ELEC CONN:25 POSN,W/HDW | 00779 | 206472-1 |
| -14 | 131-1279-00 | | | 10 | | . . CONTACT,ELEC:MALE,28-24 AWG WIRE,0.040 DIA | 00779 | 205310-4 |
| | 131-1450-00 | | | 1 | | . . CONTACT,ELEC:MALE,24-30 AWG WIRE,0.040 DIA | 00779 | 205202-6 |
| -15 | 131-1316-00 | | | 1 | | . . CONNECTOR BODY,:25 MALE-CONT POSITIONS | 00779 | 205208-1 |
| -16 | 200-0192-00 | | | 1 | | . . BUSH.,STRAIN RE: | 80009 | 200-0192-00 |
| -17 | 131-0707-00 | | | 15 | | . . CONTACT,ELEC:0.48"L,22-26 AWG WIRE | 22526 | 75691-005 |
| -18 | 352-0161-04 | | | 1 | | . . CONN BODY,PL,EL:3 WIRE YELLOW | 80009 | 352-0161-04 |
| | 352-0161-06 | | | 1 | | . . CONN BODY,PL,EL:3 WIRE BLUE | 80009 | 352-0161-06 |
| -19 | 352-0168-01 | | | 1 | | . . CONN BODY,PL,EL:10 WIRE BROWN | 80009 | 352-0168-01 |
| -20 | 343-0549-00 | | | 1 | | . . STRAP,TIEDOWN:0.091 W X 3.62 INCH LONG | 59730 | TY23M |
| -21 | 175-0828-00 | | | FT | | . . WIRE,ELECTRICAL:5 WIRE RIBBON,1.875 FT L | 08261 | OBD |
| -22 | 358-0161-00 | | | 1 | | . . BSHG,STRAIN RLF:FOR 0.50 INCH HOLE,PLASTIC | 28520 | SR5P4 |
| -23 | 175-1157-00 | | | 1 | | . . CABLE,SP ELEC:10 FEET LONG | 80009 | 175-1157-00 |
| -24 | 386-3386-00 | | | 1 | | . . PANEL,INTERFACE:HALF DUPLEX | 80009 | 386-3386-00 |
| -25 | ----- ----- | | | 1 | | . CKT BOARD ASSY:HALF DUPLEX(SEE A4 EPL) | | |
| | | | | | | (ATTACHING PARTS) | | |
| -26 | 211-0207-00 | | | 2 | | . SCR,ASSEM WSHR:4-40 X 0.312 INCH,PNH STL | 83385 | OBD |
| | | | | | | - - - * - - - | | |
| | ----- ----- | | | - | | . . CKT BOARD ASSY INCLUDES: | | |
| -27 | 105-0065-00 | | | 2 | | . . SUPPORT,CKT BD:0.25 OD X 0.670 INCH LONG | 80009 | 105-0065-00 |
| -28 | 361-0007-00 | | | 2 | | . . SPACER,SLEEVE:0.250 INCH DIA,PLASTIC | 80009 | 361-0007-00 |
| -29 | 210-0870-00 | | | 2 | | . . WASHER,FLAT:0.14 ID X 0.312 INCH OD STL | 12327 | OBD |
| -30 | 131-0589-00 | | | 54 | | . . CONTACT,ELEC:0.46 INCH LONG | 22526 | 47350 |
| -31 | 131-1425-00 | | | 1 | | . . CONTACT SET,ELE:R ANGLE,0.150" L,STR OF 36 | 22526 | 65521-136 |
| | 131-1426-00 | | | 1 | | . . CONTACT SET,ELE:R ANGLE,0.250L,STRIP OF 36 | 22526 | 65524-436 |
| -32 | 131-0993-00 | | | 4 | | . . LINK,TERM.CONNE:2 WIRE BLACK | 00779 | 530153-2 |
| | 175-1687-00 | | | 1 | | . CA ASSY,SP,ELEC:76,26 AWG,600V,62.0 L | 80009 | 175-1687-00 |
| -33 | 131-0707-00 | | | 71 | | . . CONTACT,ELEC:0.48"L,22-26 AWG WIRE | 22526 | 75691-005 |
| | 131-0621-00 | | | 7 | | . . CONTACT,ELEC:0.577"L,22-26 AWG WIRE | 22526 | 46233 |
| -34 | 175-0825-00 | | | FT | | . . WIRE,ELECTRICAL:2 WIRE RIBBON,1.042 FT LONG | 08261 | OBD |
| -35 | 175-0827-00 | | | FT | | . . WIRE,ELECTRICAL:4 WIRE RIBBON,1.146 FT LONG | 08261 | TEK-175-0827-00 |
| -36 | 175-0830-00 | | | FT | | . . WIRE,ELECTRICAL:7 WIRE RIBBON,1.708 FT LONG | 08261 | OBD |
| -37 | 352-0169-00 | | | 1 | | . . CONN BODY,PL,EL:2 WIRE BLACK | 80009 | 352-0169-00 |

[1] Option 1 only.

| Fig. & Index No. | Tektronix Part No. | Serial/Model No. Eff | Dscont | Qty | 1 2 3 4 5 Name & Description | Mfr Code | Mfr Part Number |
|---|---|---|---|---|---|---|---|
| 1- | 352-0169-03 | | | 2 | . . CONN BODY,PL,EL:2 WIRE ORANGE | 80009 | 352-0169-03 |
| -38 | 352-0162-01 | | | 1 | . . CONN BODY,PL,EL:4 WIRE BROWN | 80009 | 352-0162-01 |
| | 352-0162-09 | | | 1 | . . CONN BODY,PL,EL:4 WIRE WHITE | 80009 | 352-0162-09 |
| -39 | 352-0163-05 | | | 2 | . . CONN BODY,PL,EL:5 WIRE GREEN | 80009 | 352-0163-05 |
| -40 | 352-0165-02 | | | 2 | . . CONN BODY,PL,EL:7 WIRE RED | 80009 | 352-0165-02 |
| | 352-0165-07 | | | 1 | . . CONN BODY,PL,EL:7 WIRE VIOLET | 80009 | 352-0165-07 |
| | 352-0165-08 | | | 1 | . . CONN BODY,PL,EL:7 WIRE GRAY | 80009 | 352-0165-08 |
| -41 | 352-0390-01 | | | 2 | . . CONN BODY,PL,EL:28 WIRE,14 DBL ROW | 80009 | 352-0390-01 |
| -42 | ----- ----- | | | 1 | . . LAMP,CARTRIDGE:(SEE DS1040 EPL) | | |
| | | | | | (ATTACHING PARTS) | | |
| -43 | 352-0433-01 | | | 1 | . HOLDER,LED:MARKED WAIT | 80009 | 352-0433-01 |
| | | | | | - - - * - - - | | |
| | ----- ----- | | | 1 | CKT BD ASSY:PWR SPLY,LOGIC W/HT SINK(SEE A1 EPL) | | |
| | | | | | (ATTACHING PARTS) | | |
| -44 | 212-0023-00 | | | 2 | SCREW,MACHINE:8-32 X 0.375 INCH,PNH STL | 83385 | OBD |
| | | | | | - - - * - - - | | |
| | ----- ----- | | | - | . HEAT SINK ASSEMBLY INCLUDES: | | |
| -45 | ----- ----- | | | 3 | . TRANSISTOR:(SEE Q1065,Q1075,Q1085 EPL) | | |
| | | | | | (ATTACHING PARTS FOR EACH) | | |
| -46 | 211-0097-00 | | | 1 | . SCREW,MACHINE:4-40 X 0.312 INCH,PNH STL | 83385 | OBD |
| -47 | 210-1122-00 | | | 1 | . WASHER,LOCK:0.228 ID X 0.375 INCH OD,STL | 78189 | 4704-04-02 |
| | | | | | - - - * - - - | | |
| -48 | 342-0163-00 | | | 3 | . INSULATOR,PLATE:XSTR,0.675 X 0.625 X 0.001" | 80009 | 342-0163-00 |
| -49 | 255-0334-00 | | | 1 | . PLASTIC CHANNEL: | 11897 | 122-37-2500 |
| -50 | 407-1774-00 | | | 1 | . BRACKET,CAP.:ALUMINUM | 80009 | 407-1774-00 |
| | | | | | (ATTACHING PARTS) | | |
| -51 | 211-0507-00 | | | 2 | . SCREW,MACHINE:6-32 X 0.312 INCH,PNH STL | 83385 | OBD |
| | | | | | - - - * - - - | | |
| -52 | ----- -----[1] | | | 1 | . CKT BOARD ASSY:POWER SUPPLY(SEE A1 EPL) | | |
| | | | | | (ATTACHING PARTS) | | |
| -53 | 211-0207-00 | | | 2 | . SCR,ASSEM WSHR:4-40 X 0.312 INCH,PNH STL | 83385 | OBD |
| | | | | | - - - * - - - | | |
| | ----- ----- | | | - | . . CKT BOARD ASSEMBLY INCLUDES: | | |
| -54 | 129-0595-00 | | | 2 | . . SPACER,POST:0.38 L,4-40 THRU THD,NYLON | 80009 | 129-0595-00 |
| | | | | | (ATTACHING PARTS FOR EACH) | | |
| -55 | 211-0040-00 | | | 1 | . . SCREW,MACHINE:4-40 X 0.25",BDGH PLSTC | 26365 | OBD |
| | | | | | - - - * - - - | | |
| -56 | 131-0589-00 | | | 133 | . . CONTACT,ELEC:0.46 INCH LONG | 22526 | 47350 |
| -57 | 131-0993-00 | | | 4 | . . LINK,TERM.CONNE:2 WIRE BLACK | 00779 | 530153-2 |
| | 131-0993-09 | | | 2 | . . LINK,TERM.CONNE:2 WIRE WHITE | 00779 | 530153-1 |
| | 131-1775-00 | | | 1 | . . LINK,TERM.CONNE:WHITE,2,26 AWG,600V | 80009 | 131-1775-00 |
| -58 | 131-0707-00 | | | 4 | . . . CONTACT,ELEC:0.48"L,22-26 AWG WIRE | 22526 | 75691-005 |
| -59 | 352-0166-00 | | | 1 | . . . CONN BODY,PL,EL:8 WIRE BLACK | 80009 | 352-0166-00 |
| | 131-1776-00 | | | 1 | . . LINK,TERM.CONNE:BLACK,26 AWG,600V | 80009 | 131-1776-00 |
| | 131-0707-00 | | | 2 | . . . CONTACT,ELEC:0.48"L,22-26 AWG WIRE | 22526 | 75691-005 |
| | 352-0166-00 | | | 1 | . . . CONN BODY,PL,EL:8 WIRE BLACK | 80009 | 352-0166-00 |
| | 131-1777-00 | | | 1 | . . . LINK,TERM.CONNE:WHITE,3,26 AWG,600V | 80009 | 131-1777-00 |
| | 131-0707-00 | | | 8 | . . . CONTACT,ELEC:0.48"L,22-26 AWG WIRE | 22526 | 75691-005 |
| | 352-0166-09 | | | 1 | . . . CONN BODY,PL,EL:8 WIRE WHITE | 80009 | 352-0166-09 |
| | 131-1845-00 | | | 1 | . . LINK,TERM.CONNE:1.26 AWG,1.25 LONG | 80009 | 131-1845-00 |
| | 131-0707-00 | | | 2 | . . . CONTACT,ELEC:0.48"L,22-26 AWG WIRE | 22526 | 75691-005 |
| -60 | 352-0162-09 | | | 1 | . . . CONN BODY,PL,EL:4 WIRE WHITE | 80009 | 352-0162-09 |
| -61 | 136-0564-00 | B010100 | B010539X | 1 | . . SOCKET,PLUG-IN:40 PIN | 71279 | 703-3766-01-0416 |
| -62 | 166-0418-00 | | | 2 | . . TUBE,SHIELD:0.437 L X 0.094 ID BRASS | 76854 | 3-5152-320 |
| -63 | 253-0135-00 | | | FT | . . PLASTIC STRIP:PRESS,SENS,ADH CTD BS | 12624 | V592-1/2 |
| -64 | 344-0154-00 | | | 2 | . . CLIP,ELECTRICAL:FOR 0.25 INCH DIA FUSE | 80009 | 344-0154-00 |
| -65 | 346-0133-00 | | | 1 | . . STRAP,TIE DOWN:0.091 W X 14.0 L,PLASTIC | 59730 | TY-234M |
| -66 | 361-0749-00[1] | | | 1 | . . SPACER,CAP:4 ELECTROLYTIC | 80009 | 361-0749-00 |
| -67 | ----- ----- | | | 2 | . HEAT SINK,XSTR:STORAGE AND DEFLECTION | | |
| -68 | 386-3378-00 | | | 2 | . . SUPPORT,CKT BD: | 80009 | 386-3378-00 |
| | 343-0549-00 | | | 1 | STRAP,TIEDOWN:0.091 W X 3.62 INCH LONG | 59730 | TY23M |
| | 346-0120-00 | | | 1 | STRAP,ELEC COMP:TIEDOWN,5.5 LG,MIN PLASTIC | 06383 | SST1.5M |
| -69 | 337-2251-00 | | | 1 | SHIELD,ELEC:HIGH VOLTAGE POWER SUPPLY | 80009 | 337-2251-00 |
| | | | | | (ATTACHING PARTS) | | |
| -70 | 211-0008-00 | | | 3 | SCREW,MACHINE:4-40 X 0.25 INCH,PNH STL | 83385 | OBD |
| | | | | | - - - * - - - | | |

[1] Available under A1 EPL only.

| Fig. & Index No. | Tektronix Part No. | Serial/Model No. Eff | Dscont | Qty | 1 2 3 4 5 Name & Description | Mfr Code | Mfr Part Number |
|---|---|---|---|---|---|---|---|
| 1- | ----- ----- | | | - | . SHIELD INCLUDES: | | |
| -71 | 252-0571-00 | | | 1 | . RUB.SPL SHAPED:CHANNEL,2.0 FT LONG | 77969 | 1353 |
| | ----- ----- | | | 1 | CKT BOARD ASSY:DISPLAY W/HEAT SINK(SEE A2 EPL) | | |
| | | | | | (ATTACHING PARTS) | | |
| -72 | 212-0023-00 | | | 2 | SCREW,MACHINE:8-32 X 0.375 INCH,PNH STL | 83385 | OBD |
| | | | | | - - - * - - - | | |
| | ----- ----- | | | - | . CKT BOARD ASSEMBLY INCLUDES: | | |
| -73 | ----- ----- | | | 5 | . TRANSISTOR:(SEE Q1067,1038,1044,1048,1059 EPL) | | |
| | | | | | (ATTACHING PARTS FOR EACH) | | |
| -74 | 211-0097-00 | | | 1 | . SCREW,MACHINE:4-40 X 0.312 INCH,PNH STL | 83385 | OBD |
| -75 | 210-1171-00 | B010100 | B010539 | 1 | . WSHR,SHOULDERED:0.116 ID X 0.138 INCH OD | 52905 | A7148516P2 |
| | 210-1181-00 | B010540 | | 1 | . WASHER,LOCK:DISHED,0.12 ID X 0.375"OD,STL | 01295 | 10-31-483-0 |
| | | | | | - - - * - - - | | |
| -76 | ----- ----- | | | 4 | . TRANSISTOR:(SEE Q1069,1084,1074,1096 EPL) | | |
| | | | | | (ATTACHING PARTS FOR EACH) | | |
| -77 | 211-0097-00 | | | 1 | . SCREW,MACHINE:4-40 X 0.312 INCH,PNH STL | 83385 | OBD |
| -78 | ~~210-1122-00~~ | | | ~~1~~ | ~~. WASHER,LOCK:0.228 ID X 0.375 INCH OD,STL~~ | ~~78189~~ | ~~4704-04-02~~ |
| | | | | | - - - * - - - | | |
| -79 | 342-0163-00 | | | 8 | . INSULATOR,PLATE:XSTR,0.675 X 0.625 X 0.001" | 80009 | 342-0163-00 |
| | 342-0328-00 | | | 1 | . INSULATOR,PLATE:XSTR,ALUMINUM | 80009 | 342-0328-00 |
| -80 | 200-1327-00 | | | 1 | . SHIELD,RESISTOR: | 80009 | 200-1327-00 |
| -81 | 366-0261-00 | | | 1 | . KNOB:0.312 OD X 0.406 INCH LONG | 80009 | 366-0261-00 |
| -82 | 384-1121-00 | | | 1 | . EXTENSION SHAFT:1.41 INCH LONG | 80009 | 384-1121-00 |
| -83 | 343-0549-00 | | | 1 | . STRAP,TIEDOWN:0.091 W X 3.62 INCH LONG | 59730 | TY23M |
| -84 | ----- -----[1] | | | 1 | . CKT BOARD ASSY:DISPLAY HEAT SINK(SEE A2 EPL) | | |
| | | | | | (ATTACHING PARTS) | | |
| -85 | 211-0207-00 | | | 2 | . SCR,ASSEM WSHR:4-40 X 0.312 INCH,PNH STL | 83385 | OBD |
| | | | | | - - - * - - - | | |
| | ----- ----- | | | - | . . CKT BOARD ASSEMBLY INCLUDES: | | |
| -86 | 361-0137-00 | | | 1 | . . POST,ELEC-MECH:1.345 INCH,W/4-40 THREAD | 80009 | 361-0137-00 |
| | | | | | (ATTACHING PARTS) | | |
| -87 | 211-0040-00 | | | 1 | . . SCREW,MACHINE:4-40 X 0.25",BDGH PLSTC | 26365 | OBD |
| | | | | | - - - * - - - | | |
| | 129-0369-00 | | | 1 | . . INSULATOR,STDF:1.370 INCH,W/4-40 THREAD | 80009 | 129-0369-00 |
| | | | | | (ATTACHING PARTS) | | |
| | 211-0040-00 | | | 1 | . . SCREW,MACHINE:4-40 X 0.25",BDGH PLSTC | 26365 | OBD |
| | | | | | - - - * - - - | | |
| -88 | 131-0589-00 | | | 60 | . . CONTACT,ELEC:0.46 INCH LONG | 22526 | 47350 |
| -89 | 131-0993-00 | | | 1 | . . LINK,TERM.CONNE:2 WIRE BLACK | 00779 | 530153-2 |
| -90 | 131-1834-00 | | | 2 | . . TERMINAL,STUD:0.89 L,W/NYLON INSULATOR | 98291 | 023-3000-00-0479 |
| | 136-0647-00 | | | 1 | . . SOCKET ASSY:CRT | 80009 | 136-0647-00 |
| -91 | 136-0278-00 | | | 1 | . . . SOCKET,PLUG-IN:WITH PINS | 80009 | 136-0278-00 |
| -92 | 214-0464-00 | | | 7 | . . . . CONTACT,ELEC:CRT | 80009 | 214-0464-00 |
| -93 | 384-0616-00 | | | 1 | . . POST,ELEC-MECH:HEX,0.25 X 1.370 INCH LONG | 80009 | 384-0616-00 |
| | | | | | (ATTACHING PARTS) | | |
| -94 | 211-0008-00 | | | 1 | . . SCREW,MACHINE:4-40 X 0.25 INCH,PNH STL | 83385 | OBD |
| -95 | 210-0004-00 | | | 1 | . . WASHER,LOCK:INTL,0.12 ID X 0.26"OD,STL | 78189 | 1204-00-00-0541C |
| | | | | | - - - * - - - | | |
| -96 | ----- ----- | | | 1 | . . TRANSISTOR:(SEE Q231 EPL) | | |
| | | | | | (ATTACHING PARTS) | | |
| -97 | 210-0561-00 | | | 2 | . NUT,PLAIN,HEX.:0.188 INCH L,0.188 HEX BRS | 80009 | 210-0561-00 |
| | | | | | - - - * - - - | | |
| -98 | 386-0978-00 | | | 1 | . . INSULATOR,PLATE:0.002 INCH MICA,FOR TO-3 | 80009 | 386-0978-00 |
| -99 | 210-0201-00 | | | 1 | . . TERMINAL,LUG:SE #4 | 78189 | 2104-04-00-2520N |
| | | | | | (ATTACHING PARTS) | | |
| -100 | 213-0088-00 | | | 1 | . . SCR,TPG,THD CTG:4-24 X 0.25 INCH,PNH STL | 83385 | OBD |
| | | | | | - - - * - - - | | |
| -101 | 214-1713-01 | | | 1 | . . HEAT SINK,XSTR: | 80009 | 214-1713-01 |
| | | | | | (ATTACHING PARTS) | | |
| -102 | 211-0514-00 | | | 2 | . . SCREW,MACHINE:6-32 X 0.750 INCH,PNH STL | 83385 | OBD |
| -103 | 210-0561-00 | | | 2 | . . NUT,PLAIN,HEX.:0.188 INCH L,0.188 HEX BRS | 80009 | 210-0561-00 |
| -104 | 210-0935-00 | | | 2 | . . WASHER,NONMETAL:FIBER,0.14 IDX 0.375"OD | 74921 | OBD |
| | | | | | - - - * - - - | | |

[1]Available under A2 EPL only.

| Fig. & Index No. | Tektronix Part No. | Serial/Model No. Eff | Dscont | Qty | 1 2 3 4 5 Name & Description | Mfr Code | Mfr Part Number |
|---|---|---|---|---|---|---|---|
| 1-105 | 214-1292-00 | | | 1 | . . HEAT SINK,ELEC:TRANSISTOR | 05820 | 205-AB |
| -106 | 352-0134-00 | | | 1 | . . HOLDER,COIL:TOROIDAL,0.472 X 0.417 INCH | 80009 | 352-0134-00 |
| -107 | 214-0506-00 | | | 1 | . . CONTACT,ELEC:0.045 SQ X 0.375 INCH L | 80009 | 214-0506-00 |
| -108 | 348-0055-00 | | | 1 | . . GROMMET,PLASTIC:0.25 INCH DIA | 80009 | 348-0055-00 |
| -109 | 337-2267-00 | | | 1 | . . SHIELD,ELEC:HV TRANSFORMER | 80009 | 337-2267-00 |
| -110 | 131-0621-00 | | | 1 | . . CONTACT,ELEC:0.577"L,22-26 AWG WIRE | 22526 | 46233 |
| -111 | 352-0197-00 | | | 1 | . . CONN BODY,PL,EL:1 WIRE BLACK | 80009 | 352-0197-00 |
| -112 | ----- -----[1] | | | 1 | . HEAT SINK,XSTR: | | |
| -113 | 386-3378-00 | | | 2 | . . SUPPORT,CKT BD: | 80009 | 386-3378-00 |
| -114 | 351-0087-04 | | | 2 | GUIDE,CKT BD:PLASTIC | 80009 | 351-0087-04 |

[1]Available under A2 EPL only.

| Fig. & Index No. | Tektronix Part No. | Serial/Model No. Eff | Dscont | Qty | 1 2 3 4 5 | Name & Description | Mfr Code | Mfr Part Number |
|---|---|---|---|---|---|---|---|---|
| 2-1 | 331-0401-01 | | | 1 | | MASK,CRT: | | |
| -2 | 426-1233-01 | | | 1 | | FR,IMPLOSION SH: | 80009 | 426-1233-01 |
| | | | | | | (ATTACHING PARTS) | | |
| -3 | 212-0534-00 | | | 4 | | SCREW,MACHINE:10-32 X 1 INCH,PNH STL | 83385 | OBD |
| | | | | | | - - - * - - - | | |
| | ----- ----- | | | - | | . SHIELD INCLUDES: | | |
| -4 | 348-0485-00 | | | 2 | | . STRIP,CUSHION:0.063 THK X 0.25 W X 4.01 | | |
| -5 | 337-1482-00 | | | 1 | | SHLD,IMPLOSION: | 80009 | 337-1482-00 |
| -6 | 131-1835-00 | | | 4 | | CONTACT,ELEC:CLIPS | 80009 | 131-1835-00 |
| -7 | 386-3392-00 | B010100 | B019999 | 1 | | SPRT,CRT SHIELD: | 80009 | 386-3392-00 |
| | 386-3567-00 | B020000 | | 1 | | STIFFENER,PLATE:SHIELD HOLDER | 80009 | 386-3567-00 |
| -8 | 343-0576-00 | B010100 | B020000 | 1 | | CLAMP,COIL: | 80009 | 343-0576-00 |
| | 352-0455-00 | B020000 | | 1 | | HOLDER,CRT SHLD: | 80009 | 352-0455-00 |
| | 214-2447-00 | XB020000 | | 2 | | STOP,SHLD HLDR: | 80009 | 214-2447-00 |
| -9 | 348-0012-00 | | | 1 | | GROMMET,RUBBER:0.625 INCH DIA | 72653 | 1043-1M |
| -10 | 131-1247-00 | | | 1 | | CONTACT,ELEC:QUICK DISCONNECT | 00779 | 61664-1 |
| | | | | | | (ATTACHING PARTS) | | |
| -11 | 211-0590-00 | | | 1 | | SCREW,MACHINE:6-32 X 0.25 INCH,PNH STL | 83385 | OBD |
| -12 | 210-0457-00 | | | 1 | | NUT,PLAIN,EXT W:6-32 X 0.312 INCH,STL | 83385 | OBD |
| | | | | | | - - - * - - - | | |
| -13 | 337-2230-00 | B010100 | B019999 | 1 | | SHIELD,CRT: | 80009 | 337-2230-00 |
| | 337-2230-01 | B020000 | B020669 | 1 | | SHLD,CRT: | 80009 | 337-2230-01 |
| | 337-2230-03 | B020670 | | 1 | | SHIELD,ELEC:CRT | 80009 | 337-2230-03 |
| | | | | | | (ATTACHING PARTS) | | |
| -14 | 211-0590-00 | B010100 | B019999 | 2 | | SCREW,MACHINE:6-32 X 0.25 INCH,PNH STL | 83385 | OBD |
| | 211-0590-00 | B020000 | | 4 | | SCREW,MACHINE:6-32 X 0.25 INCH,PNH STL | 83385 | OBD |
| | 210-0457-00 | XB020000 | | 4 | | NUT,PLAIN,EXT W:6-32 X 0.312 INCH,STL | 83385 | OBD |
| | 210-0949-00 | XB020000 | | 4 | | WASHER,FLAT:0.141 ID X 0.50 INCH OD,BRS | 12327 | OBD |
| | | | | | | - - - * - - - | | |
| -15 | 119-0745-01 | | | 1 | | COIL,TUBE DEFL: | 80009 | 119-0745-01 |
| -16 | 131-0621-00 | | | 4 | | . CONTACT,ELEC:0.577"L,22-26 AWG WIRE | 22526 | 46233 |
| -17 | 352-0200-07 | | | 1 | | . CONN BODY,PL,EL:4 WIRE VIOLET | 80009 | 352-0200-07 |
| -18 | 343-0549-00 | | | 3 | | . STRAP,TIEDOWN:0.091 W X 3.62 INCH LONG | 59730 | TY23M |
| -19 | 358-0561-00 | | | 1 | | BUSHING,SLEEVE:1.15 ID X 2.0L,SI,1.2 OD | 80009 | 358-0561-00 |
| -20 | ----- ----- | | | 1 | | ELECTRON TUBE:(SEE V1 EPL) | | |
| -21 | 354-0316-01 | | | 1 | | . RING,CRT MTG:NEOPRENE | 80009 | 354-0316-01 |

| Fig. & Index No. | Tektronix Part No. | Serial/Model No. Eff | Dscont | Qty | 1 2 3 4 5 | Name & Description | Mfr Code | Mfr Part Number |
|---|---|---|---|---|---|---|---|---|
| 3-1 | 386-3394-00 | | | 1 | | PANEL,KEYBOARD: | 80009 | 386-3394-00 |
| | | | | | | (ATTACHING PARTS) | | |
| -2 | 212-0023-00 | | | 2 | | SCREW,MACHINE:8-32 X 0.375 INCH,PNH STL | 83385 | OBD |
| | | | | | | - - - * - - - | | |
| -3 | ----- ----- | | | 1 | | KEYBOARD:(SEE A3 EPL) | | |
| | | | | | | (ATTACHING PARTS) | | |
| -4 | 211-0517-00 | | | 6 | | SCREW,MACHINE:6-32 X 1 INCH,PNH,STL | 83385 | OBD |
| | | | | | | - - - * - - - | | |
| | ----- ----- | | | - | | . KEYBOARD INCLUDES: | | |
| -5 | 366-1664-00 | | | 1 | | . PUSH BUTTON:SET OF 54 | 80009 | 366-1664-00 |
| | 366-1525-01 | | | 1 | | . . PUSH BUTTON:EXCLAMATION POINT/1 | 01963 | 028-3081 |
| | 366-1525-02 | | | 1 | | . . PUSH BUTTON:DBL QUOTE/2 | 01963 | 028-3082 |
| | 366-1525-03 | | | 1 | | . . PUSH BUTTON:POUND OR NUMBER/3 | 01963 | 028-3083 |
| | 366-1525-04 | | | 1 | | . . PUSH BUTTON:PERCENT/5 | 01963 | 028-3085 |
| | 366-1525-05 | | | 1 | | . . PUSH BUTTON:GRAY,(&/6) | 01963 | 028-3086 |
| | 366-1525-06 | | | 1 | | . . PUSH BUTTON:SINGLE QUOTE/7 | 01963 | 028-3087 |
| | ~~366-1525-07~~ | | | ~~1~~ | | ~~. . PUSH BUTTON:LEFT PARENTHESIS/8~~ | ~~01963~~ | ~~028-3088~~ |
| | 366-1525-08 | | | 1 | | . . PUSH BUTTON:RIGHT PARENTHESIS/9 | 01963 | 028-3089 |
| | 366-1525-09 | | | 1 | | . . PUSH BUTTON:GRAY,(Ø) | 01963 | 028-3090 |
| | 366-1525-10 | | | 1 | | . . PUSH BUTTON:ASTERISK/COLON | 01963 | 028-3091 |
| | 366-1525-11 | | | 1 | | . . PUSH BUTTON:HYPHEN/EQUAL | 01963 | 028-1715 |
| | 366-1525-13 | | | 1 | | . . PUSH BUTTON:ALT MODE | 01963 | 028-3094 |
| | 366-1525-14 | | | 1 | | . . PUSH BUTTON:Q | 01963 | 028-3095 |
| | 366-1525-15 | | | 1 | | . . PUSH BUTTON:W | 01963 | 028-3096 |
| | 366-1525-19 | | | 1 | | . . PUSH BUTTON:Y | 01963 | 028-3100 |
| | 366-1525-20 | | | 1 | | . . PUSH BUTTON:U | 01963 | 028-3101 |
| | 366-1525-22 | | | 1 | | . . PUSH BUTTON:UNDERSCORE/O | 01963 | 028-3103 |
| | 366-1525-23 | | | 1 | | . . PUSH BUTTON:AT SIGN/P | 01963 | 028-3104 |
| | 366-1525-24 | | | 1 | | . . PUSH BUTTON:LINE FEED | 01963 | 028-3105 |
| | 366-1525-25 | | | 1 | | . . PUSH BUTTON:RETURN | 01963 | 028-2968 |
| | 366-1525-26 | | | 1 | | . . PUSH BUTTON:CTRL | 01963 | 028-3106 |
| | 366-1525-27 | | | 1 | | . . PUSH BUTTON:A | 01963 | 028-3107 |
| | 366-1525-30 | | | 1 | | . . PUSH BUTTON:F | 01963 | 028-3110 |
| | 366-1525-31 | | | 1 | | . . PUSH BUTTON:G | 01963 | 028-3111 |
| | 366-1525-32 | | | 1 | | . . PUSH BUTTON:H | 01963 | 028-3112 |
| | 366-1525-33 | | | 1 | | . . PUSH BUTTON:J | 01963 | 028-3113 |
| | 366-1525-34 | | | 1 | | . . PUSH BUTTON:LEFT BRACKET/K | 01963 | 028-3114 |
| | 366-1525-36 | | | 1 | | . . PUSH BUTTON:PLUS/SEMI-COLO | 01963 | 028-3116 |
| | 366-1525-37 | | | 1 | | . . PUSH BUTTON:RUB OUT | 01963 | 028-3117 |
| | 366-1525-38 | | | 1 | | . . PUSH BUTTON:RESET | 01963 | 028-3118 |
| -6 | 366-1525-39 | | | 1 | | . . PUSH BUTTON:BREAK | 01963 | 028-3119 |
| | 366-1525-40 | | | 2 | | . . PUSH BUTTON:SHIFT | 01963 | 028-2967 |
| | 366-1525-41 | | | 1 | | . . PUSH BUTTON:Z | 01963 | 028-3120 |
| | 366-1525-42 | | | 1 | | . . PUSH BUTTON:X | 01963 | 028-3121 |
| | 366-1525-43 | | | 1 | | . . PUSH BUTTON:C | 01963 | 028-3122 |
| | ~~366-1525-44~~ | | | 1 | | ~~. . PUSH BUTTON:V~~ | ~~01963~~ | ~~028-3123~~ |
| | 366-1525-45 | | | 1 | | . . PUSH BUTTON:B | 01963 | 028-3124 |
| | 366-1525-46 | | | 1 | | . . PUSH BUTTON:TILDE/N | 01963 | 028-3125 |
| | 366-1525-47 | | | 1 | | . . PUSH BUTTON:RIGHT BRACKET/M | 01963 | 028-3126 |
| | 366-1525-48 | | | 1 | | . . PUSH BUTTON:LESS THAN/COMA | 01963 | 028-3127 |
| | 366-1525-49 | | | 1 | | . . PUSH BUTTON:GREATER THAN/PERIOD | 01963 | 028-3128 |
| | 366-1525-50 | | | 1 | | . . PUSH BUTTON:SLASH/QUESTION MARK | 01963 | 028-3129 |
| | 366-1525-51 | | | 1 | | . . PUSH BUTTON:SPACE BAR | 01963 | 028-1232 |
| | 366-1525-52 | | | 1 | | . . PUSH BUTTON:DOLLAR SIGN/4 | 01963 | 028-3084 |
| | 366-1525-53 | | | 1 | | . . PUSH BUTTON:E | 01963 | 028-1957 |
| | 366-1525-54 | | | 1 | | . . PUSH BUTTON:R | 01963 | 028-1973 |
| | 366-1525-55 | | | 1 | | . . PUSH BUTTON:S | 01963 | 028-1975 |
| | 366-1525-56 | | | 1 | | . . PUSH BUTTON:I | 01963 | 028-1958 |
| | 366-1525-57 | | | 1 | | . . PUSH BUTTON:D | 01963 | 028-4696 |
| | 366-1525-58 | | | 1 | | . . PUSH BUTTON:BACK SLASH/L | 01963 | 028-1974 |
| | 366-1525-59 | | | 1 | | . . PUSH BUTTON:T | 01963 | 028-1953 |
| | 366-1525-60 | | | 1 | | . . PUSH BUTTON:DARK GRAY,(COPY) | 01963 | 028-2087 |
| | 366-1525-61 | | | 1 | | . . PUSH BUTTON:GRAY,BLANK | 01963 | 028-3130 |

| Fig. & Index No. | Tektronix Part No. | Serial/Model No. Eff | Dscont | Qty | 1 2 3 4 5 | Name & Description | Mfr Code | Mfr Part Number |
|---|---|---|---|---|---|---|---|---|
| 3-7 | 260-1393-00 | | | 50 | | . SWITCH,PUSH:SPST,NO KEYBOARD SWITCH | 01963 | M61-0100 |
| -8 | 260-1393-01[1] | | | 3 | | . SWITCH,PUSH:SPST,NO,KYBD SW,HIGH ACTG F | 04713 | M51-0101 |
| -9 | 386-3494-00 | | | 1 | | SUPPORT,FRAME:CRT,RIGHT | 80009 | 386-3494-00 |
| | | | | | | (ATTACHING PARTS) | | |
| -10 | 211-0590-00 | | | 2 | | SCREW,MACHINE:6-32 X 0.25 INCH,PNH STL | 83385 | OBD |
| -11 | 212-0023-00 | | | 1 | | SCREW,MACHINE:8-32 X 0.375 INCH,PNH STL | 83385 | OBD |
| | | | | | | - - - * - - - | | |
| -12 | 386-3495-00 | | | 1 | | SUPPORT,FRAME:CRT,LEFT | 80009 | 386-3495-00 |
| | | | | | | (ATTACHING PARTS) | | |
| -13 | 211-0590-00 | | | 2 | | SCREW,MACHINE:6-32 X 0.25 INCH,PNH STL | 83385 | OBD |
| | 212-0023-00 | | | 1 | | SCREW,MACHINE:8-32 X 0.375 INCH,PNH STL | 83385 | OBD |
| | | | | | | - - - * - - - | | |
| -14 | 426-1232-01 | | | 1 | | FRAME,CRT MTG: | 80009 | 426-1232-01 |
| | | | | | | (ATTACHING PARTS) | | |
| -15 | 212-0509-00 | | | 4 | | SCREW,MACHINE:10-32 X 0.625INCH,PNH STL | 83385 | OBD |
| -16 | 211-0590-00 | | | 4 | | SCREW,MACHINE:6-32 X 0.25 INCH,PNH STL | 83385 | OBD |
| | | | | | | - - - * - - - | | |
| -17 | 348-0233-00 | | | 1 | | GROMMET,PLASTIC:GRAY,OVAL SHAPE,0.927 ID | 80009 | 348-0233-00 |
| -18 | 255-0334-00 | | | FT | | PLASTIC CHANNEL: | 11897 | 122-37-2500 |
| -19 | 334-1379-00 | | | 1 | | LABEL:CRT,ADHESIVE BACK | 80009 | 334-1379-00 |
| -20 | 131-1247-00 | | | 2 | | CONTACT,ELEC:QUICK DISCONNECT | 00779 | 61664-1 |
| | | | | | | (ATTACHING PARTS FOR EACH) | | |
| -21 | 211-0590-00 | | | 1 | | SCREW,MACHINE:6-32 X 0.25 INCH,PNH STL | 83385 | OBD |
| -22 | 210-0457-00 | | | 1 | | NUT,PLAIN,EXT W:6-32 X 0.312 INCH,STL | 83385 | OBD |
| | | | | | | - - - * - - - | | |
| -23 | 337-2254-00 | | | 1 | | SHIELD,CRT:FRONT | 80009 | 337-2254-00 |
| -24 | 348-0070-01 | | | 4 | | PAD,CUSHIONING:0.69 INCH,RUBBER | 80009 | 348-0070-01 |
| -25 | 253-0160-00 | | | FT | | . TAPE,PRESS.SENS:ADHESIVE,2.124 FT LONG | 04963 | 4116 TYPE A |
| -26 | ----- ----- | | | 1 | | XFMR,PWR,SDN/SU:SEE T1001 EPL) | | |
| | | | | | | (ATTACHING PARTS) | | |
| -27 | 212-0516-00 | | | 4 | | SCREW,MACHINE:10-32 X 2 INCH,HEX HD STL | 77250 | OBD |
| -28 | 210-0812-00 | | | 4 | | WASHER,NONMETAL:#10,FIBER | 86445 | OBD |
| | 166-0227-00 | | | 4 | | INS SLV,ELEC:0.187 ID X 1.50 INCH LONG | 80009 | 166-0227-00 |
| | | | | | | - - - * - - - | | |
| | ----- ----- | | | - | | . TRANSFORMER INCLUDES: | | |
| -29 | 131-0621-00 | | | 9 | | . CONTACT,ELEC:0.577"L,22-26 AWG WIRE | 22526 | 46233 |
| -30 | 352-0205-00 | | | 1 | | . CONN BODY,PL,EL:9 WIRE BLACK | 80009 | 352-0205-00 |
| -31 | 407-1772-00 | | | 1 | | BRACKET,XFMR: | 80009 | 407-1772-00 |
| | | | | | | (ATTACHING PARTS) | | |
| -32 | 212-0001-00 | | | 2 | | SCREW,MACHINE:8-32 X 0.250 INCH,PNH STL | 77250 | OBD |
| | | | | | | - - - * - - - | | |
| -33 | 386-3321-00 | | | 1 | | SUPPORT,XFMR: | 80009 | 386-3321-00 |
| | | | | | | (ATTACHING PARTS) | | |
| -34 | 212-0001-00 | | | 4 | | SCREW,MACHINE:8-32 X 0.250 INCH,PNH STL | 77250 | OBD |
| | | | | | | - - - * - - - | | |
| -35 | 200-0582-00 | | | 1 | | CAP,ELECTRICAL:FUSE HOLDER | 71400 | 9435 1-2 |
| -36 | 352-0010-00 | | | 1 | | FUSEHOLDER:WITH HARDWARE | 71400 | HKPL |
| -37 | ----- ----- | | | 1 | | SWITCH,TOGGLE:(SEE S1000 EPL) | | |
| | | | | | | (ATTACHING PARTS) | | |
| -38 | 210-0473-00 | | | 1 | | NUT,PLAIN,DODEC:0.469-32 X 0.638 INCH,BRS | 80009 | 210-0473-00 |
| -39 | 210-0902-00 | | | 1 | | WASHER,FLAT:0.470 ID X 0.656 INCH OD,STL | 12327 | OBD |
| -40 | 210-0021-00 | | | 1 | | WASHER,LOCK:INTL,0.476 ID X 0.60"OD STL | 78189 | 1222-01-00-0541C |
| | 210-0414-00 | | | 1 | | NUT,PLAIN,HEX.:0.468-32 X 0.562 INCH,BRS | 73743 | 3167-402 |
| | | | | | | - - - * - - - | | |
| -41 | 210-0202-00 | | | 1 | | TERMINAL,LUG:SE #6 | 78189 | 2104-06-00-2520N |
| | | | | | | (ATTACHING PARTS) | | |
| -42 | 211-0504-00 | | | 1 | | SCREW,MACHINE:6-32 X 0.25 INCH,PNH STL | 83385 | OBD |
| | | | | | | - - - * - - - | | |
| -43 | 366-1522-00 | | | 1 | | KNOB:LINE VOLTAGE INDICATOR | 80009 | 366-1522-00 |
| | | | | | | (ATTACHING PARTS) | | |
| -44 | 211-0504-00 | | | 1 | | SCREW,MACHINE:6-32 X 0.25 INCH,PNH STL | 83385 | OBD |
| | | | | | | - - - * - - - | | |
| | 210-0204-00 | XB010573 | | 1 | | TERMINAL,LUG:0.146 INCH DIA DE,45 DEG BEND | 78189 | 2157-06-01-2520N |
| | | | | | | (ATTACHING PARTS) | | |
| | 211-0504-00 | XB010573 | | 1 | | SCREW,MACHINE:6-32 X 0.25 INCH,PNH STL | 83385 | OBD |
| | 210-0902-00 | XB010573 | | 1 | | WASHER,FLAT:0.470 ID X 0.656 INCH OD,STL | 12327 | OBD |
| | | | | | | - - - * - - - | | |

[1]Heavy duty switch under page, copy and break button only.

| Fig. & Index No. | Tektronix Part No. | Serial/Model No. Eff | Dscont | Qty | 1 2 3 4 5 | Name & Description | Mfr Code | Mfr Part Number |
|---|---|---|---|---|---|---|---|---|
| 3-45 | 358-0161-00 | | | 1 | | BSHG,STRAIN RLF:FOR 0.50 INCH HOLE,PLASTIC | 28520 | SR5P4 |
| -46 | 161-0033-07 | | | 1 | | CABLE ASSY,PWR,:3 WIRE,92 INCH LONG | 80009 | 161-0033-07 |
| | 175-1738-00 | | | 1 | | CA ASSY,SP,ELEC:10-26 AWG,10.5 INCH LONG | 80009 | 175-1738-00 |
| -47 | 131-0707-00 | | | 10 | | . CONTACT,ELEC:0.48"L,22-26 AWG WIRE | 22526 | 75691-005 |
| | 131-0621-00 | | | 1 | | . CONTACT,ELEC:0.577"L,22-26 AWG WIRE | 22526 | 46233 |
| -48 | 352-0168-05 | | | 1 | | . CONN BODY,PL,EL:10 WIRE GREEN | 80009 | 352-0168-05 |
| -49 | 352-0198-04 | | | 1 | | . CONN BODY,PL,EL:2 WIRE YELLOW | 80009 | 352-0198-04 |
| -50 | 366-1146-00 | | | 1 | | KNOB:GRAY,IF GAIN | 80009 | 366-1146-00 |
| | 213-0246-00 | | | 1 | | . SETSCREW:5-40 X 0.093 INCH L,HEX SOC | 71159 | OBD |
| -51 | 366-1120-00 | | | 1 | | KNOB:GRAY,0.600 INCH HIGH | 80009 | 366-1120-00 |
| | 213-0153-00 | | | 2 | | . SETSCREW:5-40 X 0.125 INCH,HEX SOC STL | 74445 | OBD |
| -52 | ----- ----- | | | 1 | | SWITCH,ROTARY:(SEE S1010 EPL) | | |
| | | | | | | (ATTACHING PARTS) | | |
| -53 | 210-0413-00 | | | 1 | | NUT,PLAIN,HEX.:0.375-32 X 0.50 INCH,STL | 73743 | 3145-402 |
| -54 | 210-0012-00 | | | 1 | | WASHER,LOCK:INTL,0.375 ID X 0.50" OD STL | 78189 | 1220-02-00-0541C |
| -55 | 210-0865-00 | | | 1 | | WSHR,SHOULDERED:0.380 ID,0.072 THK,FIBER | 80112 | 6529-M |
| | 210-0814-00 | | | 1 | | WASHER,SHLDR:0.375 ID,FIBER,0.625 OD | 86445 | OBD |
| | | | | | | - - - * - - - | | |
| -56 | ----- ----- | | | 1 | | SPEAKER:(SEE LS1001 EPL) | | |
| | | | | | | (ATTACHING PARTS) | | |
| -57 | 220-0760-00 | | | 4 | | NUT,THD FORMING:FOR 0.125 DIASTUD,STL,CD | 77122 | SC125 |
| | | | | | | - - - * - - - | | |
| | 614-0126-00 | | | 1 | | REAR PANEL ASSY: | 80009 | 614-0126-00 |
| | | | | | | (ATTACHING PARTS) | | |
| -58 | 211-0581-00 | | | 2 | | SCREW,MACHINE:6-32 X 0.375 INCH,TRH STL | 83385 | OBD |
| | | | | | | - - - * - - - | | |
| | ----- ----- | | | - | | . REAR PANEL ASSEMBLY INCLUDES: | | |
| -59 | 131-0458-00 | | | 1 | | . CONNECTOR,RCPT,:15 PIN,FEMALE | 71468 | DA15S |
| -60 | 129-0260-00 | | | 2 | | . POST,ELEC-MECH:0.255 HEX X 0.500 INCH L | 80009 | 129-0260-00 |
| -61 | 210-0406-00 | | | 2 | | . NUT,PLAIN,HEX.:4-40 X 0.188 INCH,BRS | 73743 | 2X12161-402 |
| -62 | 210-0003-00 | | | 1 | | . WASHER,LOCK:EXT,0.123 ID X 0.245" OD,STL | 78189 | 1104-00-00-0541C |
| -63 | 210-0201-00 | | | 1 | | . TERMINAL,LUG:SE #4 | 78189 | 2104-04-00-2520N |
| -64 | 131-0621-00 | | | 9 | | . CONTACT,ELEC:0.577"L,22-26 AWG WIRE | 22526 | 46233 |
| | 131-0622-00 | | | 2 | | . CONTACT,ELEC:0.577"L,28-32 AWG WIRE | 22526 | 46241 |
| | 131-0792-00 | | | 2 | | . CONTACT,ELEC:0.577"L,18-20 AWG WIRE | 22526 | 46221 |
| -65 | 343-0549-00 | | | 4 | | . STRAP,TIEDOWN:0.091 W X 3.62 INCH LONG | 59730 | TY23M |
| -66 | 352-0200-06 | | | 1 | | . CONN BODY,PL,EL:4 WIRE BLUE | 80009 | 352-0200-06 |
| -67 | 352-0205-02 | | | 1 | | . CONN BODY,PL,EL:9 WIRE RED | 80009 | 352-0205-02 |
| -68 | ----- ----- | | | 1 | | . RES,VAR,NONWW:(SEE R1050 EPL) | | |
| -69 | 210-0046-00 | | | 1 | | . WASHER,LOCK:INTL,0.26 ID X 0.40" OD,STL | 78189 | 1214-05-00-0541C |
| -70 | 129-0290-00 | | | 1 | | . POST,ELEC-MECH:0.635 INCH LONG,HEX | 80009 | 129-0290-00 |
| | | | | | | (ATTACHING PARTS) | | |
| -71 | 358-0342-00 | | | 1 | | . BSHG,MACH.THD:0.25 X 32 X 0.352 INCH LONG | 80009 | 358-0342-00 |
| -72 | 210-0046-00 | | | 1 | | . WASHER,LOCK:INTL,0.26 ID X 0.40" OD,STL | 78189 | 1214-05-00-0541C |
| -73 | 386-3389-00 | | | 1 | | . PANEL,HARD COPY: | 80009 | 386-3389-00 |
| | 012-0647-00 | | | 1 | | CABLE,INTCON:138.0 LONG | 80009 | 012-0647-00 |
| | | | | | | (ATTACHING PARTS) | | |
| -74 | 211-0581-00 | | | 2 | | SCREW,MACHINE:6-32 X 0.375 INCH,TRH STL | 83385 | OBD |
| | | | | | | - - - * - - - | | |
| | ----- ----- | | | - | | . CABLE INCLUDES: | | |
| -75 | 131-1191-00 | | | 1 | | . CONTACT,ELEC:FOR 0.25 INCH WD CONN | 00779 | 42822-2 |
| -76 | 131-0707-00 | | | 7 | | . CONTACT,ELEC:0.48"L,22-26 AWG WIRE | 22526 | 75691-005 |
| -77 | 352-0165-02 | | | 1 | | . CONN BODY,PL,EL:7 WIRE RED | 80009 | 352-0165-02 |
| -78 | 343-0549-00 | | | 1 | | . STRAP,TIEDOWN:0.091 W X 3.62 INCH LONG | 59730 | TY23M |
| -79 | 131-1215-00 | | | 1 | | . CONTACT,ELEC:CRIMP MT W/RED INS | 00779 | 42628-2 |
| | | | | | | (ATTACHING PARTS) | | |
| -80 | 210-0457-00 | | | 1 | | . NUT,PLAIN,EXT W:6-32 X 0.312 INCH,STL | 83385 | OBD |
| | | | | | | - - - * - - - | | |
| -81 | 358-0091-00 | | | 1 | | . BSHG,STRAIN RLF:FOR 0.188 INCH DIA CABLE | 28520 | SR-2M-4 |
| -82 | 131-1279-00 | | | 7 | | . CONTACT,ELEC:MALE,28-24 AWG WIRE,0.040 DIA | 00779 | 205310-4 |
| | 131-1450-00 | | | 1 | | . CONTACT,ELEC:MALE,24-30 AWG WIRE,0.040 DIA | 00779 | 205202-6 |
| -83 | 131-1316-00 | | | 1 | | . CONNECTOR BODY,:25 MALE-CONT POSITIONS | 00779 | 205208-1 |
| -84 | 200-1667-00 | | | 1 | | . COVER,ELEC CONN:25 POSN,W/HDW | 00779 | 206472-1 |

| Fig. & Index No. | Tektronix Part No. | Serial/Model No. Eff | Dscont | Qty | 1 2 3 4 5 | Name & Description | Mfr Code | Mfr Part Number |
|---|---|---|---|---|---|---|---|---|
| 3-85 | 348-0020-00 | | | 1 | | . GROMMET,RUBBER:0.25 INCH | 70485 | 374 |
| -86 | 175-1747-00 | | | FT | | . CABLE,SP,ELEC:7,26 AWG,0.165 DIA | 80009 | 175-1747-00 |
| -87 | 386-3387-00 | | | 1 | | . PANEL,INTERFACE: | 80009 | 386-3387-00 |
| | 407-0322-02 | XB010480 | | 2 | | BRKT,POWER CA:1.080 INCH LONG,CORD WRAP | 80009 | 407-0322-02 |
| | | | | | | (ATTACHING PARTS FOR EACH) | | |
| | 211-0071-00 | XB010480 | | 1 | | SCREW,MACHINE:4-40 X 0.375 INCH,TRH,STL | 83385 | OBD |
| | 210-0586-00 | XB010480 | | 1 | | NUT,PLAIN,EXT W:4-40 X 0.25 INCH,STL | 78189 | OBD |
| | | | | | | - - - * - - - | | |
| | 334-2939-00 | XB010750 | | 1 | | MARKER,IDENT:MARKED CSA | 22670 | OBD |
| -88 | 386-3337-01 | B010100 | B010479 | 1 | | PANEL,REAR: | 80009 | 386-3337-01 |
| | 386-3337-02 | B010480 | | 1 | | PANEL,REAR: | 80009 | 386-3337-02 |
| | | | | | | (ATTACHING PARTS) | | |
| -89 | 212-0023-00 | | | 4 | | SCREW,MACHINE:8-32 X 0.375 INCH,PNH STL | 83385 | OBD |
| | | | | | | - - - * - - - | | |
| -90 | 390-0474-01 | | | 1 | | CAB. SIDE,TERM:RIGHT | 80009 | 390-0474-01 |
| | | | | | | (ATTACHING PARTS) | | |
| -91 | 212-0023-00 | | | 5 | | SCREW,MACHINE:8-32 X 0.375 INCH,PNH STL | 83385 | OBD |
| | | | | | | - - - * - - - | | |
| | 131-1247-00 | | | 2 | | CONTACT,ELEC:QUICK DISCONNECT | 00779 | 61664-1 |
| | | | | | | (ATTACHING PARTS FOR EACH) | | |
| | 211-0507-00 | | | 1 | | SCREW,MACHINE:6-32 X 0.312 INCH,PNH STL | 83385 | OBD |
| | 210-0457-00 | | | 1 | | NUT,PLAIN,EXT W:6-32 X 0.312 INCH,STL | 83385 | OBD |
| | | | | | | - - - * - - - | | |
| -92 | 390-0475-01 | | | 1 | | CAB. SIDE,TERM:LEFT | 80009 | 390-0475-01 |
| | | | | | | (ATTACHING PARTS) | | |
| | 212-0023-00 | | | 5 | | SCREW,MACHINE:8-32 X 0.375 INCH,PNH STL | 83385 | OBD |
| | | | | | | - - - * - - - | | |
| -93 | 348-0128-01 | | | 4 | | FOOT,CABINET:POLYURETHANE,BLACK | 80009 | 348-0128-01 |
| -94 | 390-0473-00 | | | 1 | | CAB,BOT,TERM:FRONT | 80009 | 390-0473-00 |
| -95 | 390-0497-00 | | | 1 | | CAB. BOT,TERM:REAR | 80009 | 390-0497-00 |
| -96 | 179-2370-00 | | | 1 | | WIRING HARNESS,:MAIN | 80009 | 179-2370-00 |
| -97 | 131-0621-00 | | | 26 | | . CONTACT,ELEC:0.577"L,22-26 AWG WIRE | 22526 | 46233 |
| | 131-0622-00 | | | 3 | | . CONTACT,ELEC:0.577"L,28-32 AWG WIRE | 22526 | 46241 |
| | 131-0707-00 | | | 21 | | . CONTACT,ELEC:0.48"L,22-26 AWG WIRE | 22526 | 75691-005 |
| | 131-0708-00 | | | 3 | | . CONTACT,ELEC:0.48"L,28-32 AWG WIRE | 22526 | 47437 |
| | 131-0792-00 | | | 7 | | . CONTACT,ELEC:0.577"L,18-20 AWG WIRE | 22526 | 46221 |
| -98 | 131-0861-00 | | | 2 | | . CONTACT,ELEC:QUICK DISCONNECT | 00779 | 42617-2 |
| -99 | 136-0148-00 | | | 1 | | . CONNECTOR,RCPT,:15 PIN | 05574 | 2VK15S/1-2 |
| -100 | 343-0549-00 | | | 18 | | . STRAP,TIEDOWN:0.091 W X 3.62 INCH LONG | 59730 | TY23M |
| | 346-0128-00 | | | 1 | | . STRAP,TIE DOWN:0.1W X 8.0" LONG,NYLON | 59730 | TY-232M |
| -101 | 352-0168-08 | | | 1 | | . CONN BODY,PL,EL:10 WIRE GRAY | 80009 | 352-0168-08 |
| -102 | 352-0200-00 | | | 1 | | . CONN BODY,PL,EL:4 WIRE BLACK | 80009 | 352-0200-00 |
| | 352-0200-05 | | | 1 | | . CONN BODY,PL,EL:4 WIRE GREEN | 80009 | 352-0200-05 |
| -103 | 352-0202-06 | | | 1 | | . CONN BODY,PL,EL:6 WIRE BLUE | 80009 | 352-0202-06 |
| -104 | 352-0203-09 | | | 1 | | . CONN BODY,PL,EL:7 WIRE WHITE | 80009 | 352-0203-09 |
| | 352-0203-03 | | | 1 | | . CONN BODY,PL,EL:7 WIRE ORANGE | 80009 | 352-0203-03 |
| -105 | 352-0205-04 | | | 1 | | . CONN BODY,PL,EL:9 WIRE YELLOW | 80009 | 352-0205-04 |
| -106 | 352-0390-01 | | | 1 | | . CONN BODY,PL,EL:28 WIRE,14 DBL ROW | 80009 | 352-0390-01 |
| | | | | | | STANDARD ACCESSORIES | | |
| | 070-1891-00 | | | 1 | | MANUAL,TECH:USERS | 80009 | 070-1891-00 |
| | | | | | | OPTIONAL ACCESSORIES | | |
| | 021-0173-00 | | | 1 | | INTERFACE:HALF DUPLEX | 80009 | 021-0173-00 |
| | 070-1892-00 | | | 1 | | MANUAL,TECH:SERVICE | 80009 | 070-1892-00 |
| | 016-0346-00 | | | 1 | | VISOR,CRT: | 80009 | 016-0346-00 |
| | 016-0364-00 | | | 1 | | PEDESTAL KIT: | 80009 | 016-0364-00 |

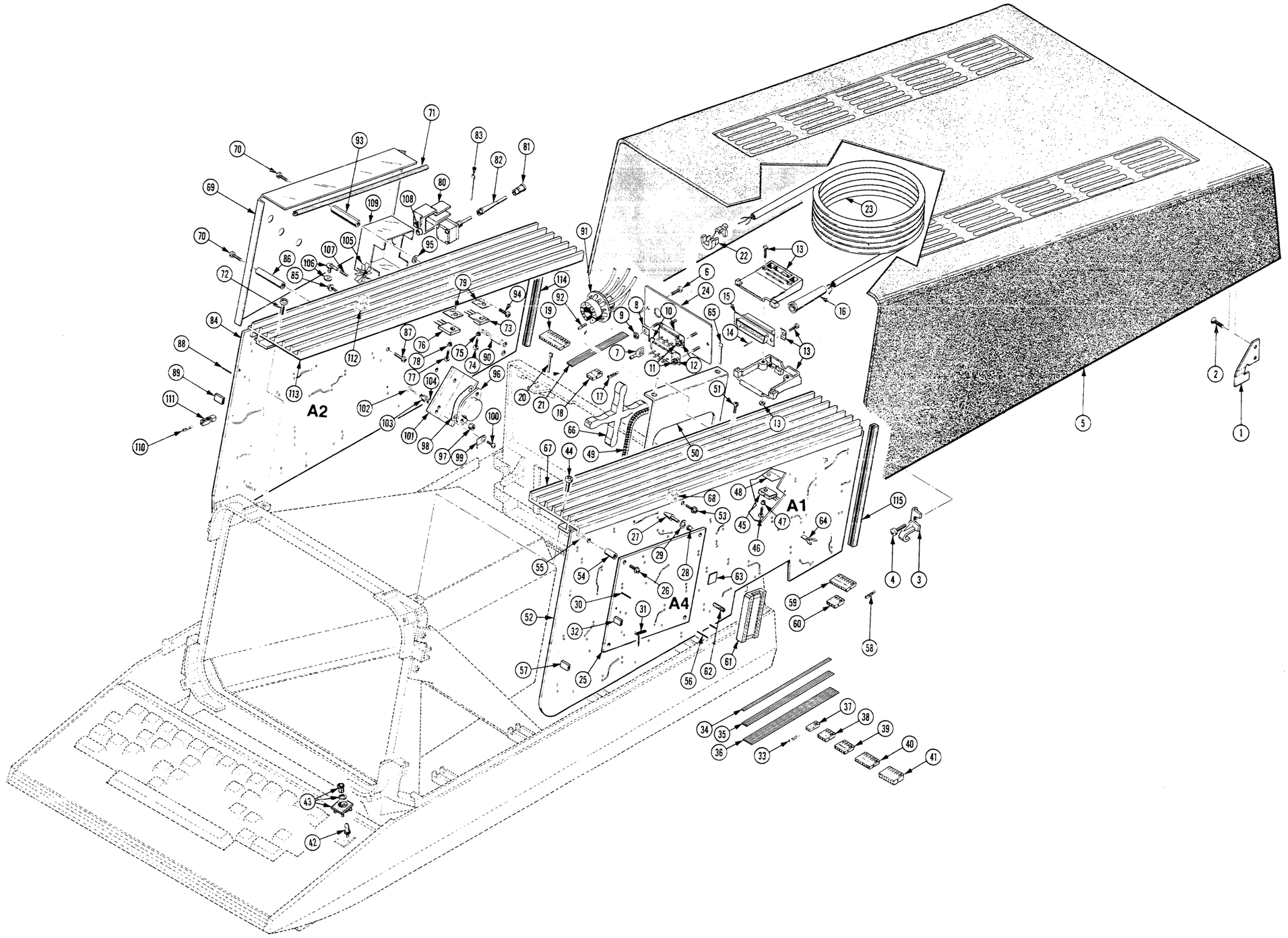
A1
A2
A4

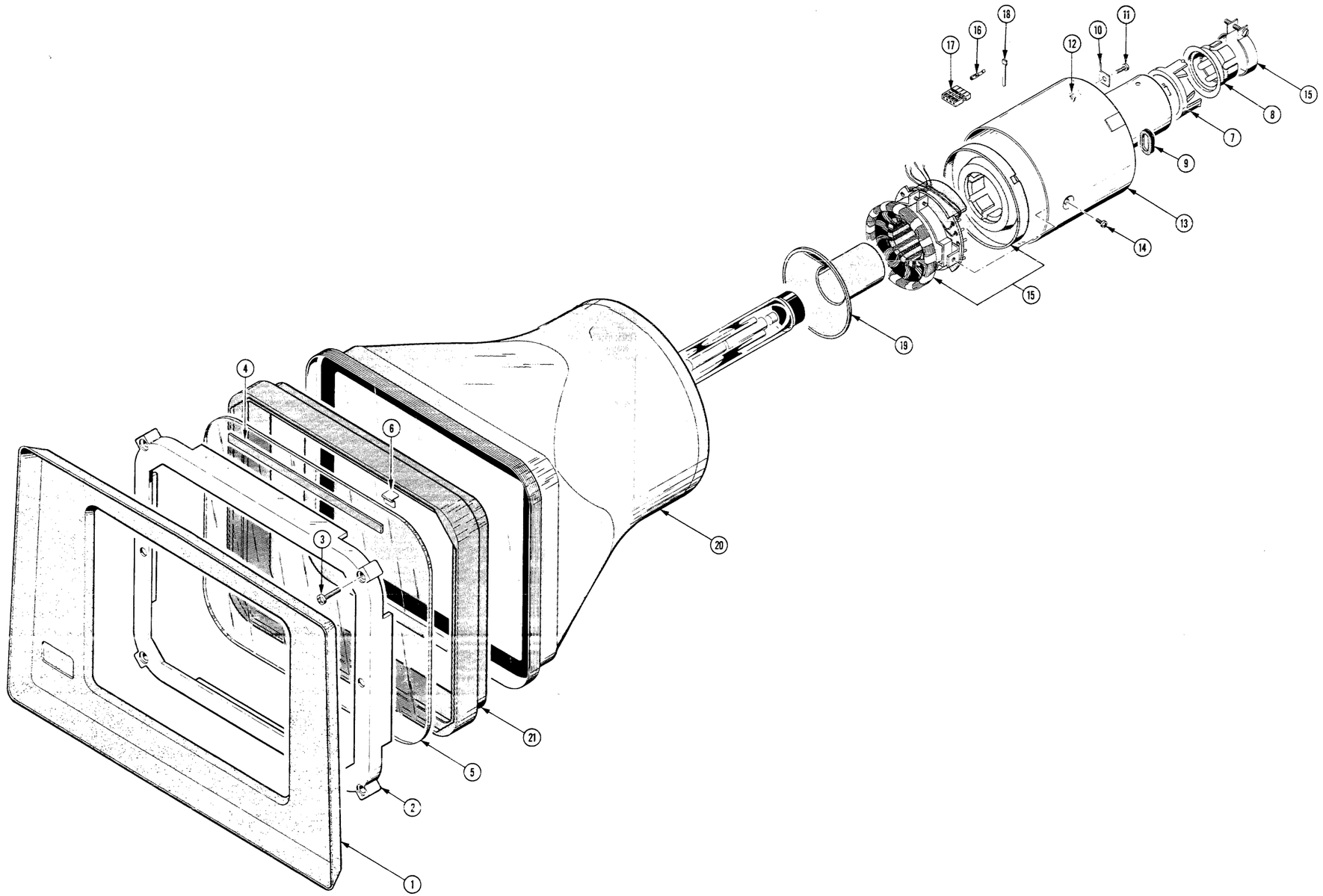
17
16
18
12
10
11
15
8
7
9
13
14
15
19
4
6
3
20
21
5
2
1

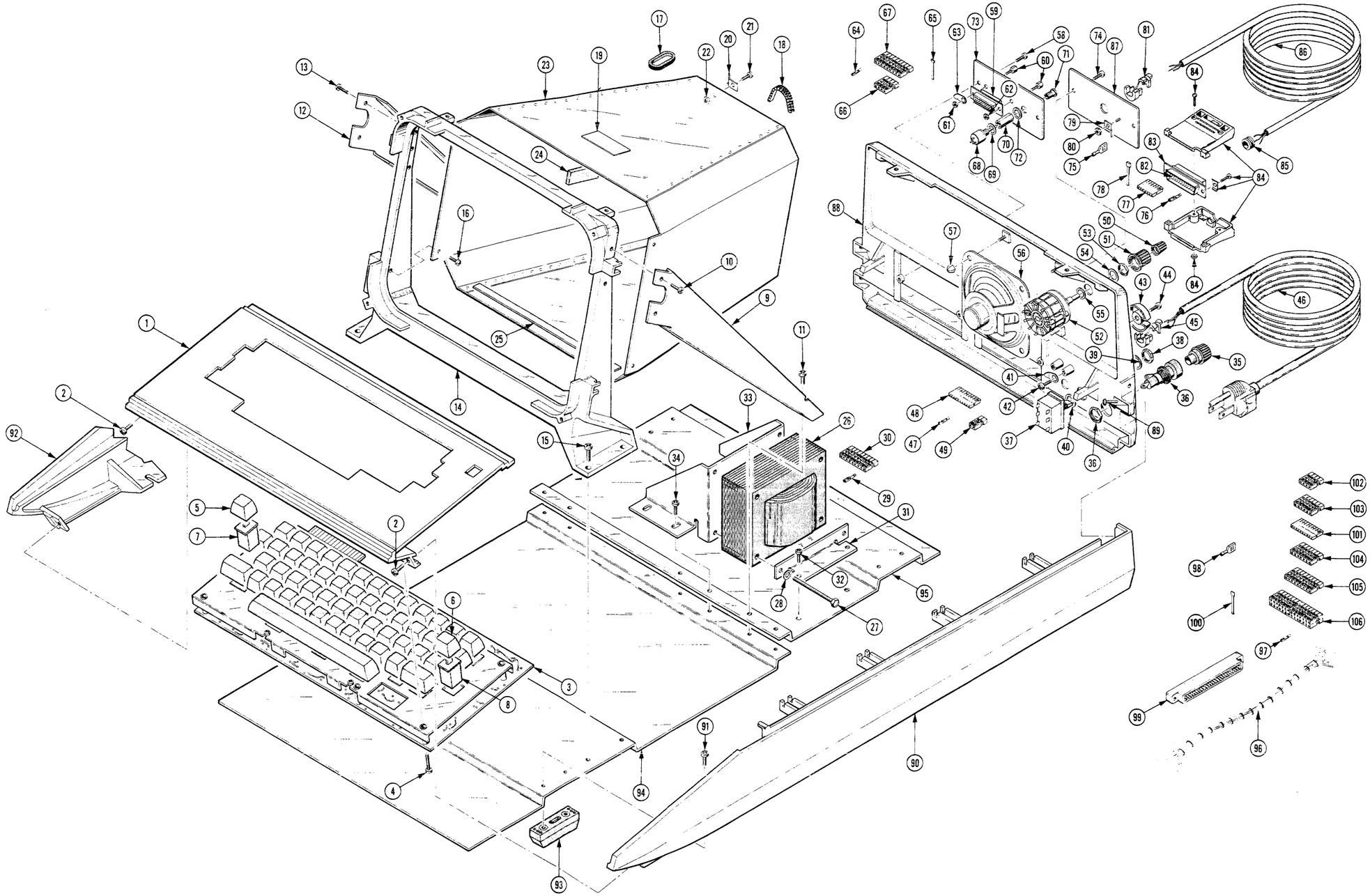
1
2
3
4
5
6
7
8
9
10
11
12
13
14
15
16
17
18
19
20
21
22
23
24
25
26
27
28
29
30
31
32
33
34
35
36
37
38
39
40
41
42
43
44
45
46
47
48
49
50
51
52
53
54
55
56
57
58
59
60
61
62
63
64
65
66
67
68
69
70
71
72
73
74
75
76
77
78
79
80
81
82
83
84
85
86
87
88
89
90
91
92
93
94
95
96
97
98
99
100
101
102
103
104
105
106

TEKTRONIX®
committed to technical excellence

# MANUAL CHANGE INFORMATION

PRODUCT 4006-1 Service
070-1892-00

CHANGE REFERENCE M31106
DATE 6-2-77

| CHANGE: | DESCRIPTION |
|---|---|

EFF SN B022704

ELECTRICAL PARTS LIST AND SCHEMATIC CHANGES

CHANGE TO:

| | | |
|---|---|---|
| A2 | 672-0537-06 | CKT BOARD ASSY:DISPLAY W/HT SINK |
| R212 | 307-0314-01 | RES.,FXD,FILM:VOLTAGE DIVIDER |

TEKTRONIX®
committed to technical excellence

# MANUAL CHANGE INFORMATION

PRODUCT 4006-1 Service
070-1892-00

CHANGE REFERENCE M30691
DATE 5-12-77 REV. 10-10-77

| CHANGE: | DESCRIPTION |
|---|---|

EFF SN B022504

ELECTRICAL PARTS LIST AND SCHEMATIC CHANGES

CHANGE TO:

| | | |
|---|---|---|
| A2 | 672-0537-05 | CKT BOARD ASSY:DISPLAY W/HT SINK |
| R27 | 322-0452-00 | RES.,FXD,FILM:499K OHM,1%,0.25W |
| R28 | 321-0193-00 | RES.,FXD,FILM:1K OHM,1%,0.125W |
| R29 | 321-0222-00 | RES.,FXD,FILM:2K OHM,1%,0.125W |
| R32 | 315-0349-00 | RES.,FXD,CMPSN:42.2K OHM,5%,0.25W |
| R33 | 321-0289-00 | RES.,FXD,FILM:10K OHM,1%,0.125W |
| R34 | 321-0366-00 | RES.,FXD,FILM:63.4K OHM,1%,0.125W |
| R35 | 321-0260-00 | RES.,FXD,FILM:4.99K OHM,1%,0.125W |
| R36 | 311-1560-00 | RES.,VAR,NONWIR:5K OHM,20%,0.50W |
| R176 | 321-0234-00 | RES.,FXD,FILM:2.67K OHM,1%,0.125W |
| R178 | 321-0243-00 | RES.,FXD,FILM:3.32K OHM,1%,0.125W |
| R242 | 301-0272-00 | RES.,FXD,CMPSN:2.7K OHM,5%,0.50W |
| R284 | 321-0234-00 | RES.,FXD,FILM:2.67K OHM,1%,0.125W |
| R286 | 321-0328-00 | RES.,FXD,FILM:25.5K OHM,1%,0.125W |
| R292 | 321-0243-00 | RES.,FXD,FILM:3.32K OHM,1%,0.125W |
| R293 | 321-0328-00 | RES.,FXD,FILM:25.5K OHM,1%,0.125W |
| R392 | 311-1559-00 | RES.,VAR,NONWIR:10K OHM,20%,0.50W |
| R393 | 311-1559-00 | RES.,VAR,NONWIR:10K OHM,20%,0.50W |
| R472 | 321-0306-00 | RES.,FXD,FILM:15K OHM,1%,0.125W |
| R478 | 311-1559-00 | RES.,VAR,NONWIR:10K OHM,20%,0.50W |
| R494 | 321-0405-00 | RES.,FXD,FILM:162K OHM,1%,0.125W |
| R495 | 321-0341-00 | RES.,FXD,FILM:34.8K OHM,1%,0.125W |
| R548 | 315-0102-00 | RES.,FXD,CMPSN:1K OHM,5%,0.25W |
| R588 | 321-0314-00 | RES.,FXD,FILM:18.2K OHM,1%,0.125W |
| R594 | 321-0236-00 | RES.,FXD,FILM:2.80K OHM,1%,0.125W |
| R595 | 321-0314-00 | RES.,FXD,FILM:18.2K OHM,1%,0.125W |
| R686 | 311-1555-00 | RES.,VAR,NONWIR:100K OHM,20%,0.50W |
| R691 | 311-1561-00 | RES.,VAR,NONWIR:2.5K OHM,20%,0.50W |

| CHANGE: | | DESCRIPTION |
|---|---|---|
| CHANGE TO: | | |
| R772 | 321-0244-00 | RES.,FXD,FILM:3.40K OHM,1%,0.125W |
| R776 | 321-0217-00 | RES.,FXD,FILM:1.78K OHM,1%,0.125W |
| R782 | 321-0276-00 | RES.,FXD,FILM:7.32K OHM,1%,0.125W |
| R793 | 321-0193-00 | RES.,FXD,FILM:1K OHM,1%,0.125W |
| R794 | 321-0289-00 | RES.,FXD,FILM:10K OHM,1%,0.125W |
| ADD: | | |
| CR29 | 152-0141-02 | SEMICOND DEVICE:SILICON,30V,150MA,1N4152 |
| CR545 | 152-0141-02 | SEMICOND DEVICE:SILICON,30V,150MA,1N4152 |
| L545 | 120-0382-00 | TRANSFORMER,TOROID,14T,SINGLE |
| R353 | 315-0201-00 | RES.,FXD,CMPSN:200 OHM,5%,0.25W |
| R355 | 315-0201-00 | RES.,FXD,CMPSN:200 OHM,5%,0.25W |
| R471 | 321-0392-00 | RES.,FXD,FILM:118K OHM,1%,0.125W |
| R473 | 321-0280-00 | RES.,FXD,FILM:8.60K OHM,1%,0.125W |
| R770 | 321-0222-00 | RES.,FXD,FILM:2K OHM,1%,0.125W |
| R775 | 321-0222-00 | RES.,FXD,FILM:2K OHM,1%,0.125W |
| R777 | 321-0283-00 | RES.,FXD,FILM:8.66K OHM,1%,0.125W |
| R781 | 315-0102-00 | RES.,FXD,CMPSN:1K OHM,5%,0.25W |
| R784 | 321-0193-00 | RES.,FXD,FILM:1K OHM,1%,0.125W |
| R785 | 321-0193-00 | RES.,FXD,FILM:1K OHM,1%,0.125W |
| R789 | 321-0283-00 | RES.,FXD,FILM:8.66K OHM,1%,0.125W |
| R791 | 321-0193-00 | RES.,FXD,FILM:1K OHM,1%,0.125W |
| U31 | 156-0067-01 | MICROCIRCUIT,LI:OPERATIONAL AMPLIFIER |
| U485 | 155-0152-00 | MICROCIRCUIT,LI:GEOMETRY & FOCUS CORRECTION |
| U585 | 155-0154-00 | MICROCIRCUIT,LI:CHANNEL SWITCH |
| VR573 | 152-0166-00 | SEMICOND DEVICE:ZENER,6.2V,0.4W,5%,1N753A |
| VR575 | 152-0166-00 | SEMICOND DEVICE:ZENER,6.2V,0.4W,5%,1N753A |
| VR592 | 152-0166-00 | SEMICOND DEVICE:ZENER,6.2V,0.4W,5%,1N753A |
| VR593 | 152-0166-00 | SEMICOND DEVICE:ZENER,6.2V,0.4W,5%,1N753A |
| REMOVE: | | |
| CR327 | 152-0141-02 | SEMICOND DEVICE:SILICON,30V,150MA,1N4152 |
| CR395 | 152-0141-02 | SEMICOND DEVICE:SILICON,30V,150MA,1N4152 |
| CR396 | 152-0141-02 | SEMICOND DEVICE:SILICON,30V,150MA,1N4152 |

| CHANGE: | | DESCRIPTION |
|---|---|---|
| REMOVE: | | |
| CR398 | 152-0141-02 | SEMICOND DEVICE:SILICON,30V,150MA,1N4152 |
| CR475 | 152-0141-02 | SEMICOND DEVICE:SILICON,30V,150MA,1N4152 |
| CR476 | 152-0141-02 | SEMICOND DEVICE:SILICON,30V,150MA,1N4152 |
| CR497 | 152-0141-02 | SEMICOND DEVICE:SILICON,30V,150MA,1N4152 |
| CR575 | 152-0141-02 | SEMICOND DEVICE:SILICON,30V,150MA,1N4152 |
| CR586 | 152-0141-02 | SEMICOND DEVICE:SILICON,30V,150MA,1N4152 |
| CR593 | 152-0141-02 | SEMICOND DEVICE:SILICON,30V,150MA,1N4152 |
| CR596 | 152-0141-02 | SEMICOND DEVICE:SILICON,30V,150MA,1N4152 |
| CR597 | 152-0141-02 | SEMICOND DEVICE:SILICON,30V,150MA,1N4152 |
| CR677 | 152-0141-02 | SEMICOND DEVICE:SILICON,30V,150MA,1N4152 |
| CR678 | 152-0141-02 | SEMICOND DEVICE:SILICON,30V,150MA,1N4152 |
| CR775 | 152-0141-02 | SEMICOND DEVICE:SILICON,30V,150MA,1N4152 |
| CR781 | 152-0141-02 | SEMICOND DEVICE:SILICON,30V,150MA,1N4152 |
| Q31 | 151-0219-00 | TRANSISTOR:SILICON,PNP,SS22650 |
| Q473 | 151-0190-00 | TRANSISTOR:SILICON,NPN, |
| Q481 | 151-0353-00 | TRANSISTOR:SILICON,NPN,DUAL MONOLITH |
| Q482 | 151-0353-00 | TRANSISTOR:SILICON,NPN,DUAL MONOLITH |
| Q551 | 151-0188-00 | TRANSISTOR:SILICON,PNP,2N3906 |
| Q552 | 151-0188-00 | TRANSISTOR:SILICON,PNP,2N3906 |
| Q674 | 151-0190-00 | TRANSISTOR:SILICON,NPN |
| R31 | 315-0473-00 | RES.,FXD,CMPSN:47K OHM,5%,0.25W |
| R198 | 321-0253-00 | RES.,FXD,FILM:4.22K OHM,1%,0.125W |
| R199 | 315-0222-00 | RES.,FXD,CMPSN:2.2K OHM,5%,0.25W |
| R282 | 321-0318-00 | RES.,FXD,FILM:20K OHM,1%,0.125W |
| R287 | 321-0318-00 | RES.,FXD,FILM:20K OHM,1%,0.125W |
| R291 | 321-0318-00 | RES.,FXD,FILM:20K OHM,1%,0.125W |
| R294 | 321-0318-00 | RES.,FXD,FILM:20K OHM,1%,0.125W |
| R295 | 321-0306-00 | RES.,FXD,FILM:15K OHM,1%,0.125W |
| R297 | 321-0253-00 | RES.,FXD,FILM:4.22K OHM,1%,0.125W |
| R298 | 321-0253-00 | RES.,FXD,FILM:4.22K OHM,1%,0.125W |
| R299 | 321-0253-00 | RES.,FXD,FILM:4.22K OHM,1%,0.125W |
| R374 | 321-0289-00 | RES.,FXD,FILM:10K OHM,1%,0.125W |
| R375 | 321-0193-00 | RES.,FXD,FILM:1K OHM,1%,0.125W |
| R376 | 321-0301-00 | RES.,FXD,FILM:13.3K OHM,1%,0.125W |
| R377 | 321-0301-00 | RES.,FXD,FILM:13.3K OHM,1%,0.125W |
| R382 | 321-0280-00 | RES.,FXD,FILM:8.06K OHM,1%,0.125W |

| CHANGE: | | DESCRIPTION |
|---|---|---|
| REMOVE: | | |
| R384 | 321-0306-00 | RES.,FXD,FILM:15K OHM,1%,0.125W |
| R390 | 321-0309-00 | RES.,FXD,FILM:16.2K OHM,1%,0.125W |
| R391 | 321-0309-00 | RES.,FXD,FILM:16.2K OHM,1%,0.125W |
| R398 | 321-0306-00 | RES.,FXD,FILM:15K OHM,1%,0.125W |
| R452 | 315-0103-00 | RES.,FXD,CMPSN:10K OHM,5%,0.25W |
| R477 | 321-0253-00 | RES.,FXD,FILM:4.22K OHM,1%,0.125W |
| R482 | 315-0470-03 | RES.,FXD,CMPSN:47 OHM,5%,0.25W |
| R483 | 321-0289-00 | RES.,FXD,FILM:10K OHM,1%,0.125W |
| R485 | 321-0309-00 | RES.,FXD,FILM:16.2K OHM,1%,0.125W |
| R491 | 315-0470-03 | RES.,FXD,CMPSN:47 OHM,5%,0.25W |
| R492 | 321-0301-00 | RES.,FXD,FILM:13.3K OHM,1%,0.125W |
| R493 | 321-0318-00 | RES.,FXD,FILM:20K OHM,1%,0.125W |
| R498 | 321-0402-00 | RES.,FXD,FILM:150K OHM,1%,0.125W |
| R547 | 315-0472-00 | RES.,FXD,CMPSN:4.7K OHM,5%,0.25W |
| R551 | 315-0103-00 | RES.,FXD,CMPSN:10K OHM,5%,0.25W |
| R572 | 321-0289-00 | RES.,FXD,FILM:10K OHM,1%,0.125W |
| R573 | 321-0288-00 | RES.,FXD,FILM:9.76K OHM,1%,0.125W |
| R574 | 321-0289-00 | RES.,FXD,FILM:10K OHM,1%,0.125W |
| R576 | 321-0289-00 | RES.,FXD,FILM:10K OHM,1%,0.125W |
| R578 | 321-0346-00 | RES.,FXD,FILM:39.2K OHM,1%,0.125W |
| R581 | 321-0289-00 | RES.,FXD,FILM:10K OHM,1%,0.125W |
| R582 | 321-0289-00 | RES.,FXD,FILM:10K OHM,1%,0.125W |
| R583 | 321-0348-00 | RES.,FXD,FILM:41.2K OHM,1%,0.125W |
| R585 | 321-0339-00 | RES.,FXD,FILM:33.2K OHM,1%,0.125W |
| R587 | 321-0289-00 | RES.,FXD,FILM:10K OHM,1%,0.125W |
| R591 | 321-0402-00 | RES.,FXD,FILM:150K OHM,1%,0.125W |
| R592 | 321-0318-00 | RES.,FXD,FILM:20K OHM,1%,0.125W |
| R599 | 321-0318-00 | RES.,FXD,FILM:20K OHM,1%,0.125W |
| R673 | 315-0102-00 | RES.,FXD,CMPSN:1K OHM,5%,0.25W |
| R678 | 321-0346-00 | RES.,FXD,FILM:39.2K OHM,1%,0.125W |
| R679 | 321-0289-00 | RES.,FXD,FILM:10K OHM,1%,0.125W |
| R681 | 321-0289-00 | RES.,FXD,FILM:10K OHM,1%,0.125W |
| R682 | 321-0348-00 | RES.,FXD,FILM:41.2K OHM,1%,0.125W |
| R688 | 315-0102-00 | RES.,FXD,CMPSN:1K OHM,5%,0.25W |

| CHANGE: | DESCRIPTION |
|---|---|

REMOVE:

| | | |
|---|---|---|
| R693 | 321-0270-00 | RES.,FXD,FILM:6.34K OHM,1%,0.125W |
| R694 | 321-0385-00 | RES.,FXD,FILM:100K OHM,1%,0.125W |
| R696 | 315-0912-00 | RES.,FXD,CMPSN:9.1K OHM,5%,0.25W |
| R697 | 315-0912-00 | RES.,FXD,CMPSN:9.1K OHM,5%,0.25W |
| R698 | 315-0471-00 | RES.,FXD,CMPSN:470 OHM,5%,0.25W |
| R699 | 315-0471-00 | RES.,FXD,CMPSN:470 OHM,5%,0.25W |
| R773 | 321-0288-00 | RES.,FXD,FILM:9.76K OHM,1%,0.125W |
| R774 | 321-0289-00 | RES.,FXD,FILM:10K OHM,1%,0.125W |
| R778 | 321-0339-00 | RES.,FXD,FILM:33.2K OHM,1%,0.125W |
| R786 | 321-0270-00 | RES.,FXD,FILM:6.34K OHM,1%,0.125W |
| R787 | 321-0385-00 | RES.,FXD,FILM:100K OHM,1%,0.125W |
| R792 | 315-0183-00 | RES.,FXD,CMPSN:18K OHM,5%,0.25W |
| R795 | 315-0393-00 | RES.,FXD,CMPSN:39K OHM,5%,0.25W |
| R796 | 315-0393-00 | RES.,FXD,CMPSN:39K OHM,5%,0.25W |
| R797 | 321-0134-00 | RES.,FXD,FILM:243 OHM,1%,0.125W |
| R798 | 321-0134-00 | RES.,FXD,FILM:243 OHM,1%,0.125W |
| U296 | 156-0048-00 | MICROCIRCUIT,LI:FIVE NPN TRANSISTOR ARRAY,CA3046 |
| U381 | 156-0158-00 | MICROCIRCUIT,LI:DUAL OPERATIONAL AMPLIFIER |
| U496 | 156-0158-00 | MICROCIRCUIT,LI:DUAL OPERATIONAL AMPLIFIER |
| U577 | 156-0158-00 | MICROCIRCUIT,LI:DUAL OPERATIONAL AMPLIFIER |
| U777 | 156-0158-00 | MICROCIRCUIT,LI:DUAL OPERATIONAL AMPLIFIER |
| U791 | 156-0032-00 | MICROCIRCUIT,DI:4-BIT BINARY COUNTER |

Refer to the block diagram overlay on the Display Board schematics 2 sheets 1 thru 3; match the function block to the existing circuit discription. The logic is functionally the same but the geometry, deflection amplifiers and channel switch circuitry are now contained in U485 and U585.

TEKTRONIX®
committed to technical excellence

# MANUAL CHANGE INFORMATION

PRODUCT 4006-1 Service
070-1892-00

CHANGE REFERENCE M32777
DATE 5-3-78

| CHANGE: | DESCRIPTION |
|---|---|

EFF SN B03400

ELECTRICAL PARTS LIST AND SCHEMATIC CHANGES

CHANGE TO:

| | | |
|---|---|---|
| A1 | 672-0526-01 | CKT BOARD ASSY:PWR SPLY AND LOGIC W/HT SINK |

ADD:

| | | |
|---|---|---|
| C146 | 281-0523-00 | CAP.,FXD,CER DI:100PF,20%,500V |

DIAGRAM <1> TRANSMIT/RECEIVE & CLOCK GENERATION - Partial

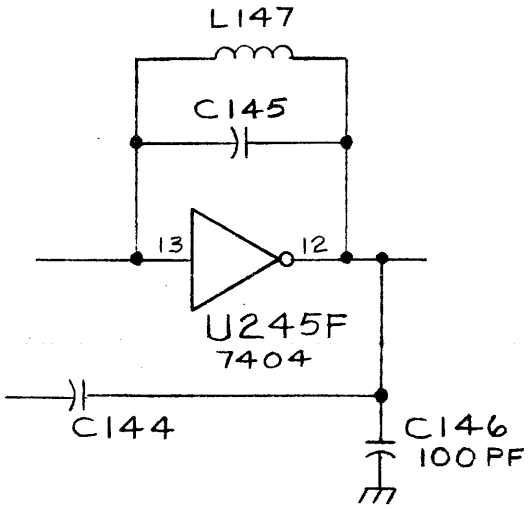

TEKTRONIX®
committed to technical excellence

# MANUAL CHANGE INFORMATION

PRODUCT 4006-1 Service
070-1892-00

CHANGE REFERENCE C2/778
DATE 7-18-78

| CHANGE: | DESCRIPTION |
|---|---|

SCHEMATIC CORRECTIONS

DIAGRAM 1 X & Y AXIS (SH 3) - Partial
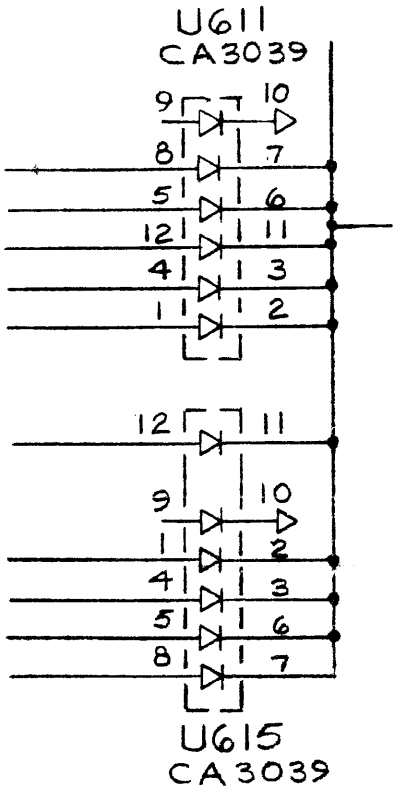
Change pin numbers of U611 and U615 as shown below: