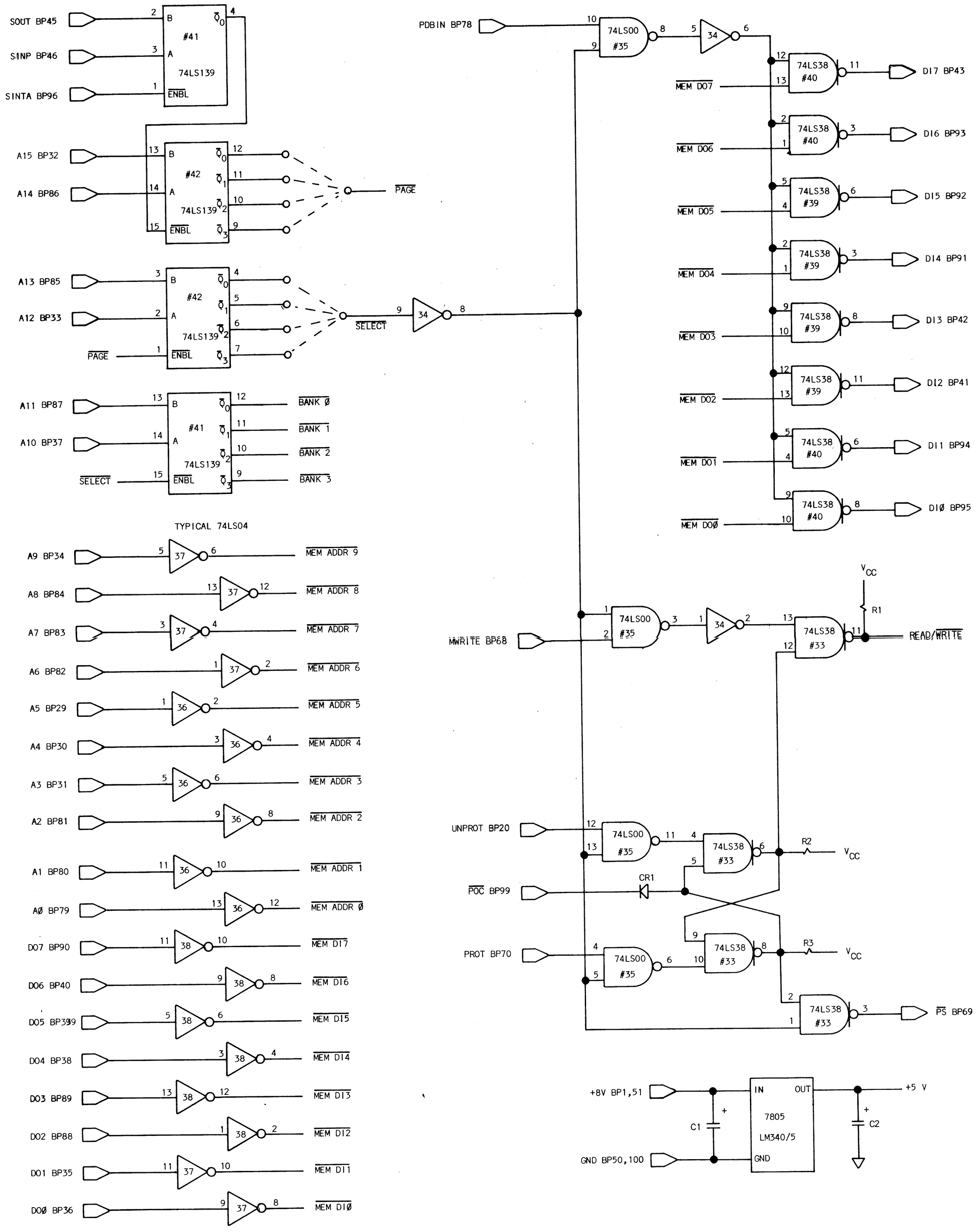

K-RATION 4K x 8 STATIC MEMORY MODULE A THINKER TOY™ from MORROW'S

ADDRESS & DATA BUFFERS, CONTROL LOGIC PAGE 1 of 3 COPYRIGHT 1977 G. MORROW