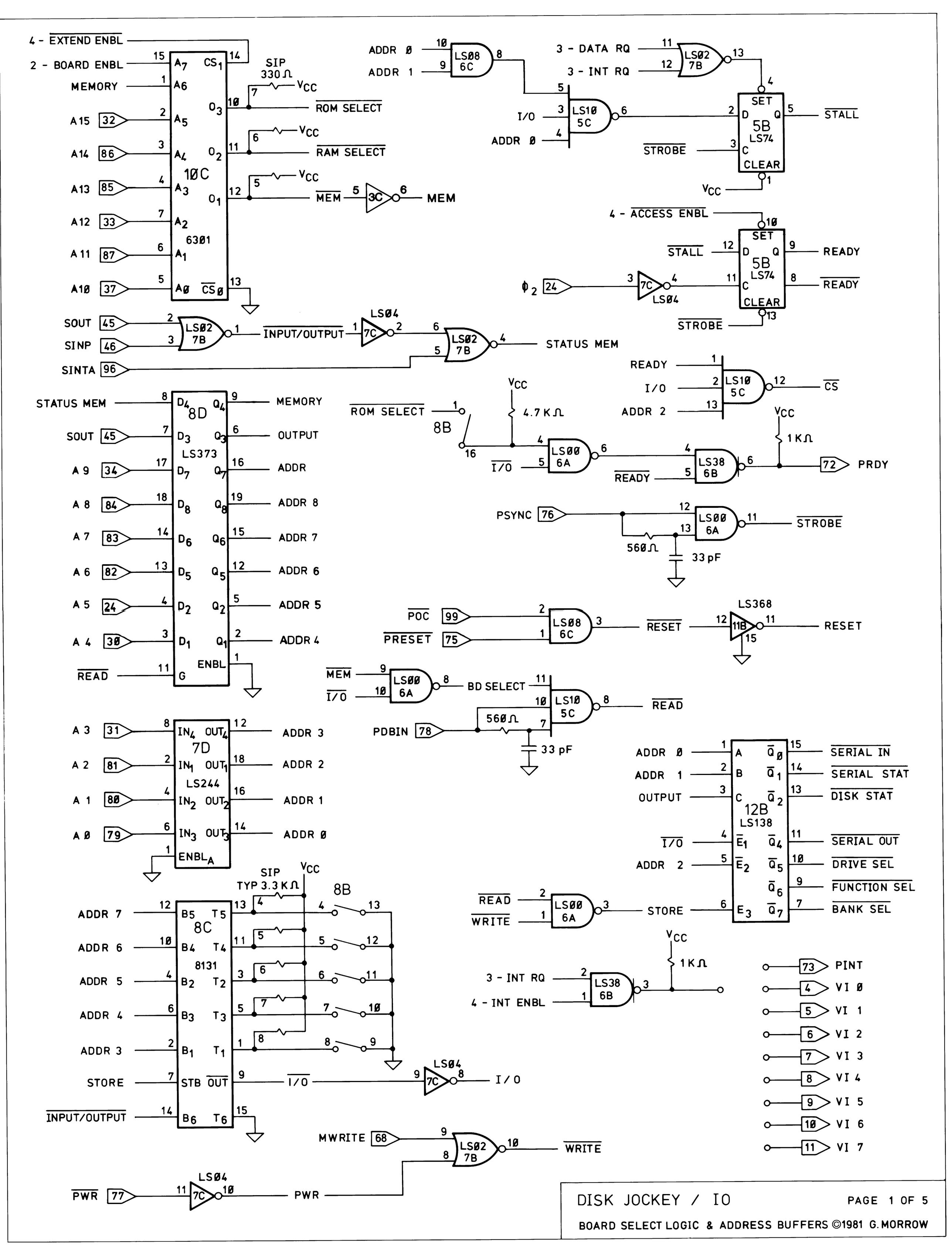

DISK JOCKEY / IO

PAGE 1 OF 5

BOARD SELECT LOGIC & ADDRESS BUFFERS ©1981 G.MORROW

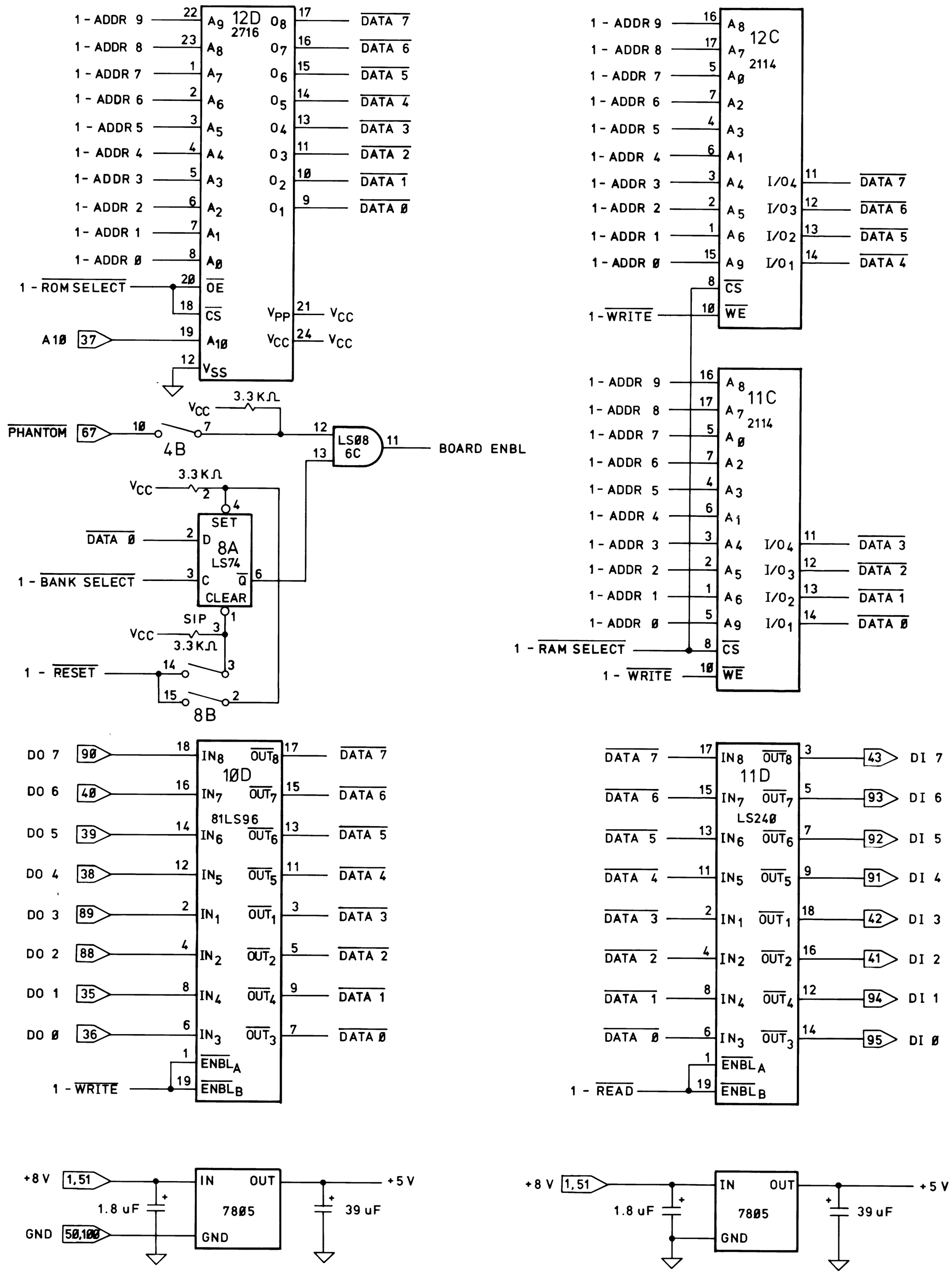

DISK JOCKEY / IO

PAGE 2 OF 5

RAM, ROM, & DATA BUFFERS

©1981 G. MORROW

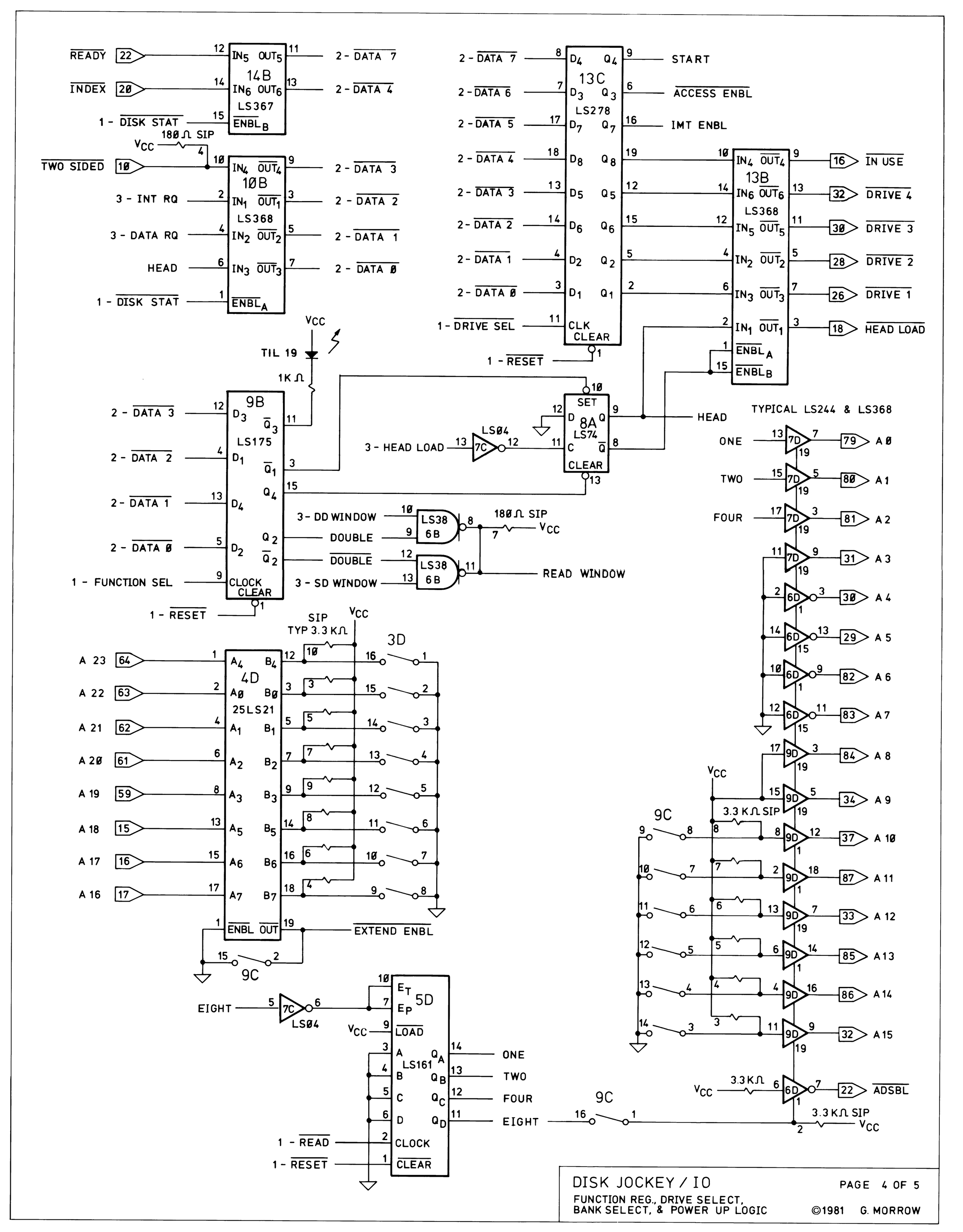
READY
INDEX
1 - DISK STAT
14B
LS367
2 - DATA 7
2 - DATA 4
TWO SIDED
3 - INT RQ
3 - DATA RQ
HEAD
1 - DISK STAT
10B
LS368
2 - DATA 3
2 - DATA 2
2 - DATA 1
2 - DATA 0
180Ω SIP
VCC
13C
LS278
2 - DATA 7
2 - DATA 6
2 - DATA 5
2 - DATA 4
2 - DATA 3
2 - DATA 2
2 - DATA 1
2 - DATA 0
1 - DRIVE SEL
1 - RESET
START
ACCESS ENBL
IMT ENBL
13B
LS368
IN USE
DRIVE 4
DRIVE 3
DRIVE 2
DRIVE 1
HEAD LOAD
TIL 19
1K Ω
9B
LS175
2 - DATA 3
2 - DATA 2
2 - DATA 1
2 - DATA 0
1 - FUNCTION SEL
1 - RESET
3 - HEAD LOAD
LS04
7C
8A
LS74
SET
CLEAR
HEAD
3 - DD WINDOW
DOUBLE
3 - SD WINDOW
LS38
6B
READ WINDOW
TYPICAL LS244 & LS368
ONE
TWO
FOUR
A 0
A 1
A 2
A 3
A 4
A 5
A 6
A 7
A 8
A 9
A 10
A 11
A 12
A 13
A 14
A 15
ADSBL
3.3 KΩ SIP
3.3 KΩ
A 23
A 22
A 21
A 20
A 19
A 18
A 17
A 16
4D
25LS21
SIP
TYP 3.3 KΩ
3D
9C
ENBL OUT
EXTEND ENBL
EIGHT
5D
LS161
LOAD
CLOCK
CLEAR
1 - READ
1 - RESET
DISK JOCKEY / IO
FUNCTION REG., DRIVE SELECT,
BANK SELECT, & POWER UP LOGIC
PAGE 4 OF 5
©1981 G. MORROW

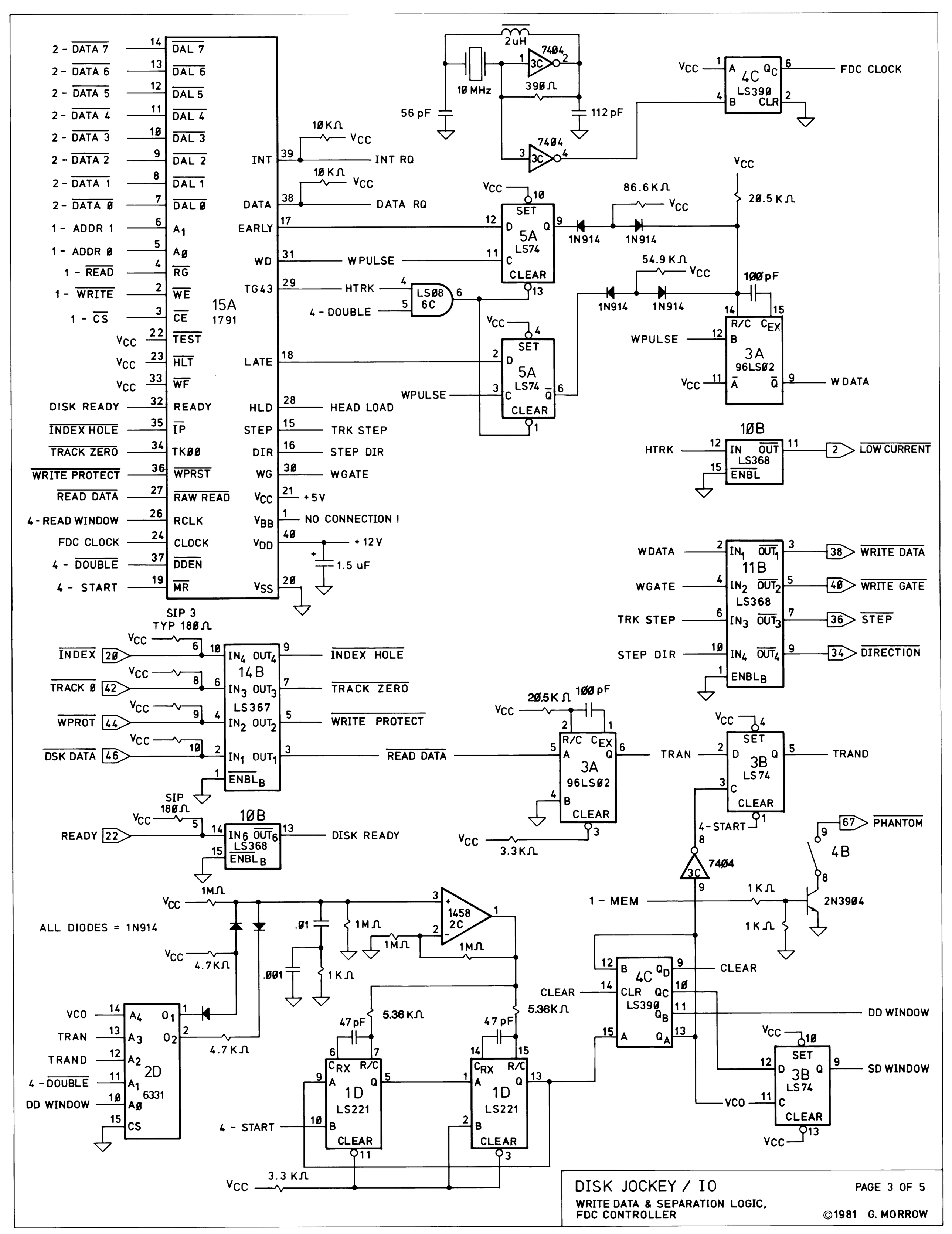

DISK JOCKEY / IO

WRITE DATA & SEPARATION LOGIC, FDC CONTROLLER

PAGE 3 OF 5

©1981 G. MORROW

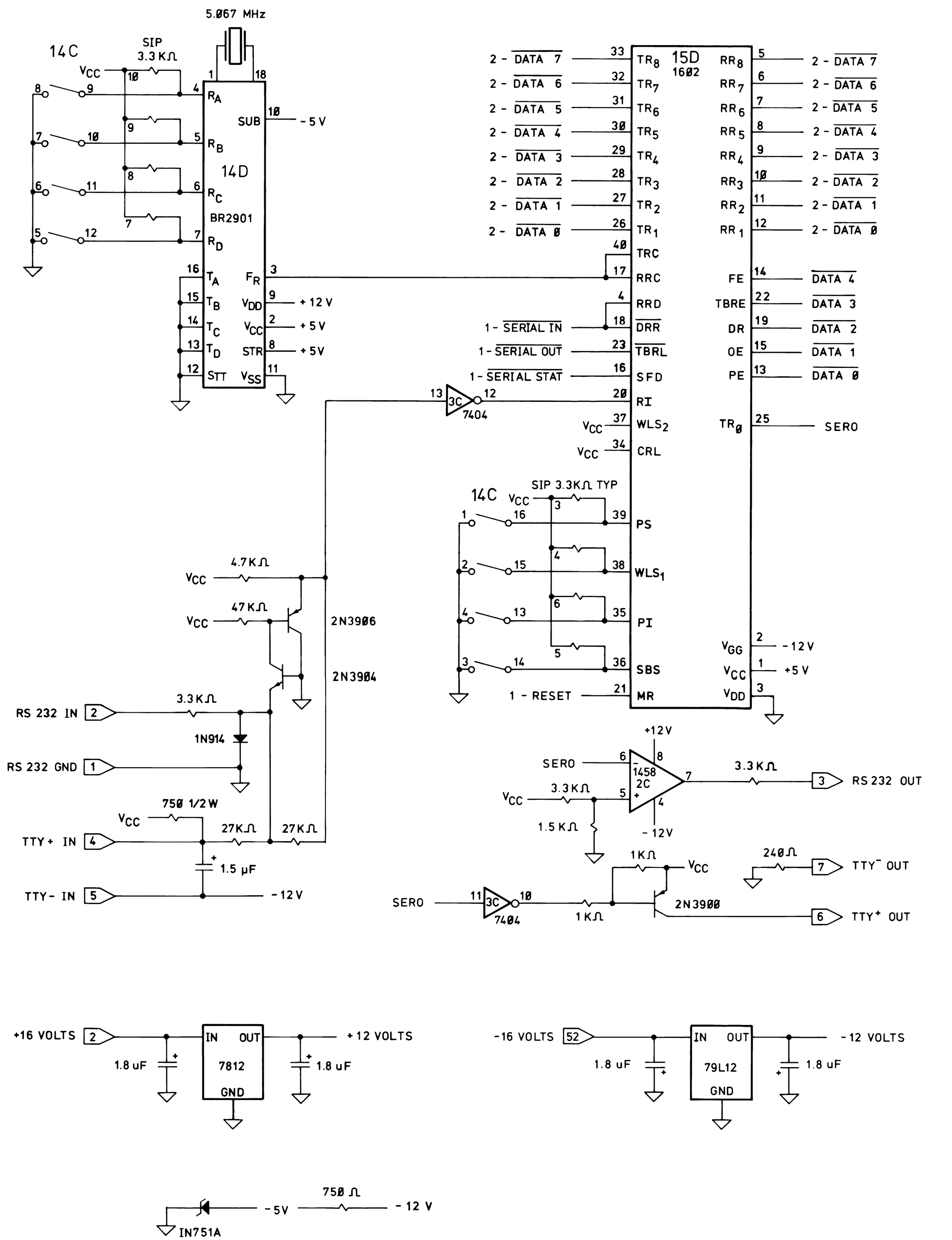

DISK JOCKEY / IO

PAGE 5 OF 5

SERIAL INTERFACE LOGIC

©1981 G. MORROW