IBM

3174 Establishment Controller

GA23-0313-03

Models 81R, 82R, 91R, and 92R User's Guide

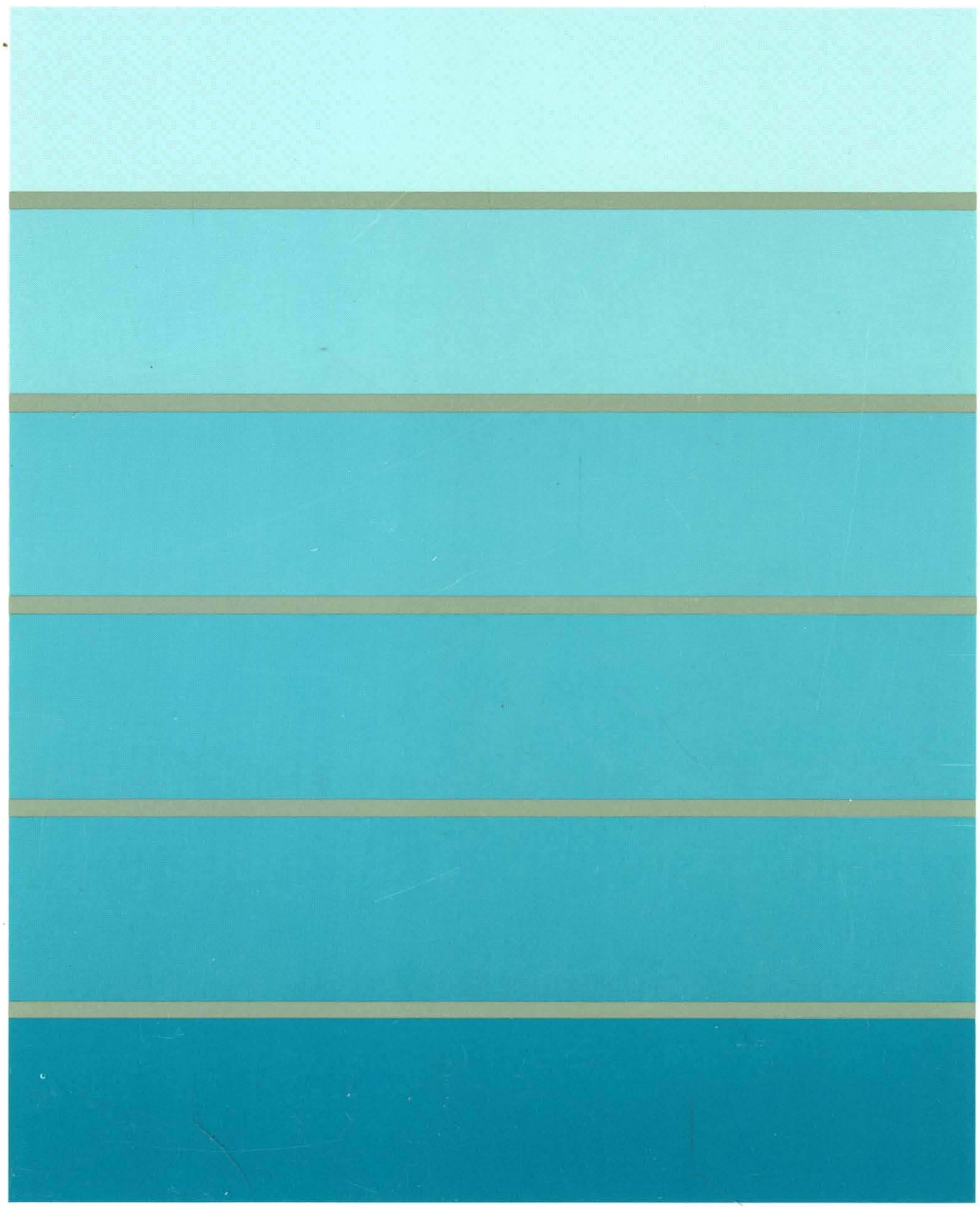

3270 Information Display System

3174 Establishment Controller

GA23-0313-03

Models 81R, 82R, 91R, and 92R User's Guide

Fourth Edition (May 1989)

This major revision obsoletes and replaces GA23-0313-2.

Changes are made periodically to the information herein; before using this publication in connection with the operation of IBM systems, consult the latest *IBM System/370, 30xx, and 4300 Processors Bibliography*, GC20-0001, for the editions that are applicable and current.

References in this publication to IBM products, programs, or services do not imply that IBM intends to make these available in all countries in which IBM operates. Any reference to an IBM licensed program in this publication is not intended to state or imply that only IBM's licensed program may be used. Any functionally equivalent program may be used instead.

Publications are not stocked at the address given below. Requests for IBM publications should be made to your IBM representative or to the IBM branch office serving your locality.

A form for reader's comments is provided at the back of this publication. If the form is missing, address comments to: IBM Corporation Department E02 P.O. Box 12195 Research Triangle Park N.C., U.S.A. 27709. IBM may use or distribute whatever information you supply in any way it believes appropriate without incurring any obligation to you. You may continue to use the information that you supply.

© Copyright International Business Machines Corporation 1987, 1988, 1989

The following warning statements (required by country regulatory agencies) are applicable in the countries indicated.

United States

Warning: This equipment generates, uses, and can radiate radio frequency energy and if not installed and used in accordance with the instructions manual may cause interference to radio communications. It has been tested and found to comply with the limits for a Class A computing device pursuant to Subpart J of Part 15 of FCC Rules, which are designed to provide reasonable protection against such interference when operated in a commercial environment. Operation of this equipment in a residential area is likely to cause interference in which case the user at his own expense will be required to take whatever measures may be required to correct the interference.

Additional IBM Statement

This warning is also applicable to all attaching units produced for use in the U.S.A. that have been manufactured after December 31, 1980. A notice of compliance has been affixed within the customer access area of all affected units.

Instructions to User:

Properly shielded and grounded cables and connectors must be used for connection to peripherals in order to meet FCC emission limits. Proper cables are available through IBM marketing channels, or from dealers of computer accessories. IBM is not responsible for any radio or television interference caused by using other than recommended cables or by unauthorized modifications to this equipment. It is the responsibility of the user to correct such interference.

United Kingdom

Warning: This IBM product is made to high Safety standards. It complies inherently with Telecommunications safety standard BS6301. It is not designed to provide protection from excessive voltages appearing externally at its interfaces. Therefore, when this product is connected to a public telecommunications network via any other equipment, and you connect to this product items not supplied by IBM United Kingdom Ltd., you must comply with mandatory telecommunications safety requirements.

You may do this either by choosing products which also are approved as complying to BS6301 or British Telecom Technical Guide No. 26, or by the use of approved safety barriers. Consult the local office of your public telecommunications operator, for advice and permission to make the connections.

Canadian Department of Communications compliance statement

This equipment does not exceed Class B limits per radio noise emissions for digital apparatus, set out in the Radio Interference Regulation of the Canadian Department of Communications. Operation in a residential area may cause unacceptable interference to radio and TV reception requiring the owner or operator to take whatever steps are necessary to correct the interference.

Avis de conformité aux normes du ministère des Communications du Canada

Cet équipement ne dépasse pas les limites de Classe B d'émission de bruits radioélectriques pour les appareils numériques, telles que prescrites par le Règlement sur le brouillage radioélectrique établi par le ministère des Communications du Canada. L'exploitation faite en milieu résidentiel peut entraîner le brouillage des réceptions radio et télé, ce qui obligerait le propriétaire ou l'opérateur à prendre les dispositions nécessaires pour en éliminer les causes.

Choosing the Right Book from the 3174 Library

The 3174 library contains information for installing, customizing, operating, maintaining, and programming the data stream for the 3174 controller. The list below shows the manuals you need to perform these tasks.

To Organize Library Materials:

Binders and Inserts, SBOF-0089
- Binder, SX23-0331
- Inserts, SX23-0332

To Become Familiar with the 3174:

Master Index, GC30-3515
3174 Introduction, GA27-3850
3270 Information Display System Introduction, GA27-2739

To Prepare Your Site for the 3174:

Site Planning, GA23-0213
Physical Planning Template, GX27-2999

To Set Up and Operate the 3174:

Models 1L, 1R, 2R, 3R, 11L, 11R, 12R, and 13R User's Guide, GA23-0337
Models 51R, 52R, 53R, 61R, 62R, and 63R User's Guide, GA23-0333
Models 81R, 82R, 91R, and 92R User's Guide, GA23-0313

To Plan for and Customize the 3174:

Configuration Support A and S

Planning Guide, GA27-3844
Utilities Guide, GA27-3853
Central Site Customizing User's Guide, GA23-0342

Configuration Support B

Planning Guide, GA27-3862
Utilities Guide, GA27-3863
Central Site Customizing User's Guide, GA23-3868

To Install Features or Convert Models on the 3174:

Encrypt/Decrypt Adapter Installation and Removal Instructions, GA23-0262
Fixed Disk Installation and Removal Instructions, GA27-3864
Diskette Drive Installation and Removal Instructions, GA23-0263
Terminal Multiplexer Adapter Installation and Removal Instructions, GA23-0265
Model Conversion Instructions, GA23-0295
Token-Ring Network Feature Installation and Removal Instructions, GA23-0329
Storage Expansion Feature Installation and Removal Instructions, GA23-0330
Asynchronous Emulation Adapter Installation and Removal Instructions, GA23-0341
Concurrent Communication Adapter Installation and Removal Instructions, GA27-3851

To Plan for and Use the Asynchronous Emulation Adapter Feature:

Planning Guide, GA27-3844 or GA27-3862
Utilities Guide, GA27-3853 or GA27-3863
Terminal User's Reference for Expanded Functions, GA23-0332

To Use the Multiple Logical Terminals Function:

Planning Guide, GA27-3844 or GA27-3862
Utilities Guide, GA27-3853 or GA27-3863
Terminal User's Reference for Expanded Functions, GA23-0332

To Perform Problem Determination:

Customer Problem Determination, GA23-0217
Status Codes, GA27-3832

To Obtain Data Stream Programming and Reference Information:

Functional Description, GA23-0218
Data Stream Programmer's Reference, GA23-0059
3174 Character Set Reference, GA27-3831
3270 Character Set Reference, GA27-2837
3270 X.25 Operation, GA23-0204

To Perform Maintenance (Service Personnel):

Models 1L, 1R, 2R, 3R, 11L, 11R, 12R, and 13R Maintenance Information, SY27-2572
Models 51R, 52R, 53R, 61R, 62R, and 63R Maintenance Information, SY27-2573
Models 81R, 82R, 91R, and 92R Maintenance Information, SY27-2584

To Find Translations of Safety Notices:

Safety Notices, GA27-3824

Preface

This manual contains operator reference, setup, cabling, relocation, and basic problem-solving information for the IBM 3174 Models 81R, 82R, 91R, and 92R.

This manual should remain with the controller so that the responsible people can refer to it when doing operating procedures or basic problem solving.

How This Book Is Organized

This manual has six chapters and two appendixes:

- Chapter 1 contains an introduction to the 3174 Models 81R, 82R, 91R, and 92R.
- Chapter 2 describes how to set up a 3174 Models 81R, 82R, 91R, and 92R and verify that it is operating correctly.
- Chapter 3 contains information about cabling, connectors, and ports. It shows sample configurations of the 3174 Models 81R, 82R, 91R, and 92R.
- Chapter 4 describes how to make the 3174 operational.
- Chapter 5 describes how to correct some of the basic problems that might occur with the 3174 Establishment Controller and how to perform offline tests.
- Chapter 6 describes how to relocate the 3174 Establishment Controller.
- Appendix A contains reference information about diskettes and diskette drives.
- Appendix B contains reference information about cable accessories.

This User's Guide and the 3174 Library

The *User's Guide* is complemented by other documents in the 3174 library:

- The *IBM 3174 Establishment Controller Customer Problem Determination* manual is used by customer personnel. It contains problem determination procedures and testing information.
- The *IBM 3174 Establishment Controller Status Codes* manual is used by customer personnel and service representatives. It provides detailed information on status codes that may appear on the controller or attached terminals, and is to be used at the host site and remote site.
- The *IBM 3174 Establishment Controller Planning Guide* is used by skilled customer personnel to plan for customizing and to complete the customization information worksheets.
- The *IBM 3174 Establishment Controller Utilities Guide* is used by customer personnel to perform such activities as customizing the Control disk, copying files, and performing media management.
- The *IBM 3174 Establishment Controller Models 81R, 82R, 91R, and 92R Maintenance Information* manual (MIM) is used by service representatives.

Contents

Chapter 1. Introduction 1-1
3174 Establishment Controller Models 1-2
3174 Description 1-3
3174 Model Descriptions 1-3
Operations with Diskettes 1-4
Status Codes 1-4
Offline Tests 1-4
Online Tests 1-4
Problem Solving 1-5
3174 Panels, Switches, and Indicators 1-6
Operator Panel 1-7
Dual-Function Keys 1-8
Rear Panel 1-9
Cables and Connectors 1-9
AC Power Indicator 1-9

Chapter 2. Setting Up the 3174 Controller 2-1
Items Shipped with the Controller 2-2
How to Set Up 3174 Models 81R, 82R, 91R, and 92R 2-4

Chapter 3. Cables and Connections 3-1
How to Connect Cables 3-2
Terminal Cable Connectors 3-2
Modular Plugs 3-2
Terminal Adapter Connectors 3-3
Host Connection 3-3
3270 Terminal Port Addresses 3-4
For Terminals Directly Connected to the Terminal Adapter 3-4
For Terminals Indirectly Connected to the Terminal Adapter 3-4
3174 Ports and Cables 3-5
Sample Configuration 3-5

Chapter 4. Operation 4-1
Making the 3174 Operational 4-2
To IML the 3174 with Power On 4-3
To IML the 3174 with Power Off 4-4
Taking the 3174 Offline 4-4

Chapter 5. Controller Problem Solving and Offline Testing 5-1
Problem Solving 5-3
Offline Tests 5-6
Alt 2 IML 5-6
Alt 1 IML 5-8

Chapter 6. Relocation Instructions 6-1
How to Relocate the 3174 Controller 6-2

Appendix A. Diskettes and Diskette Drives A-1
Diskettes and Diskette Drives A-2
Operations with Diskettes A-2
Description of 3174 Diskettes A-3
Control Diskette A-3

Utility Diskette A-3
Limited Function Utility (LFU) Diskette A-3
Diskette Shipping and Receiving A-4
Long-Term Storage of Diskettes A-4

Appendix B. Cable Accessories B-1
3174 Cables, Plugs, and Accessories B-2

List of Abbreviations X-1

Glossary X-3

Index X-7

Figures

1-1. Front View of 3174 Models 81R, 82R, 91R, and 92R 1-2
1-2. Rear View of 3174 Models 81R, 82R, 91R, and 92R 1-2
1-3. 3174 Models 81R, 82R, 91R, and 92R Terminal Configuration 1-3
1-4. 3174 Models 81R, 82R, 91R, and 92R — Front Panel 1-6
1-5. 3174 Models 81R, 82R, 91R, and 92R — Rear Panel 1-6
1-6. 3174 Operator Panel 1-7
1-7. 3174 Models 81R, 82R, 91R, and 92R Direct-Connect Cables, Connectors, and AC Power Indicator 1-9
2-1. Items Shipped with the Controller 2-2
2-2. 3174 Models 81R, 82R, 91R, and 92R — Front View 2-3
2-3. 3174 Models 81R, 82R, 91R, and 92R — Rear View 2-3
3-1. Sample Cabling Layout of 3174 Models 81R, 82R, 91R, and 92R 3-5
3-2. Sample Configuration Using 3299 Terminal Multiplexer 3-6
3-3. Sample Configuration Using Direct Connection 3-7

Summary of Changes

Fourth Edition (May 1989)

Information has been added, where applicable, for the following:

- The name *IBM 3174 Subsystem Control Unit* has been changed to *IBM 3174 Establishment Controller*.
- New models 91R and 92R.
- 2.4MB diskette.

Chapter 1. Introduction

3174 Establishment Controller Models 1-2
3174 Description 1-3
  3174 Model Descriptions 1-3
Operations with Diskettes 1-4
Status Codes 1-4
Offline Tests 1-4
Online Tests 1-4
Problem Solving 1-5
3174 Panels, Switches, and Indicators 1-6
  Operator Panel 1-7
  Dual-Function Keys 1-8
  Rear Panel 1-9
  Cables and Connectors 1-9
  AC Power Indicator 1-9

This chapter provides an overall description of the IBM 3174 Models 81R, 82R, 91R, and 92R and features.

3174 Establishment Controller Models

The 3174 Models 81R, 82R, 91R, and 92R links display stations and printers (from now on, display stations and printers will be referred to as *terminals*) to a central computer, or host. The controller controls the operations of the terminals attached to it.

The 3174 is available in the following models:

3174 Models 1L, 1R, 2R, 3R, 11L, 11R, 12R, and 13R
3174 Models 51R, 52R, 53R, 61R, 62R, and 63R
3174 Models 81R, 82R, 91R, and 92R.

This manual supports only Models 81R, 82R, 91R, and 92R.

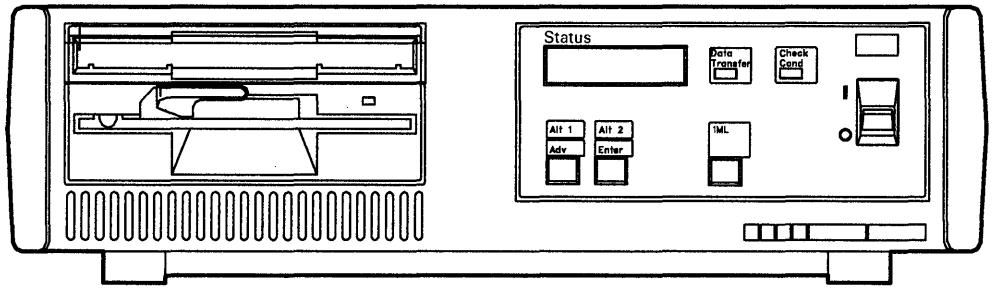

Figure 1-1. Front View of 3174 Models 81R, 82R, 91R, and 92R

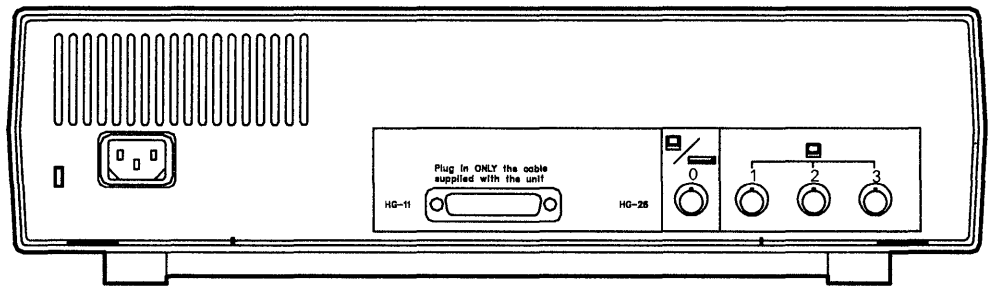

Figure 1-2. Rear View of 3174 Models 81R, 82R, 91R, and 92R

3174 Description

The 3174 links terminals to a central computer, or host (see Figure 1-3).

- Up to four terminals can communicate with the host computer when directly attached to the four terminal connectors on the controller.
- Up to eight terminals can communicate with the host computer when attached to a 3299 Terminal Multiplexer that is connected to terminal connector 0 on the controller. Nothing is connected to terminal connectors 1—3 when a 3299 Terminal Multiplexer is connected to terminal connector 0.

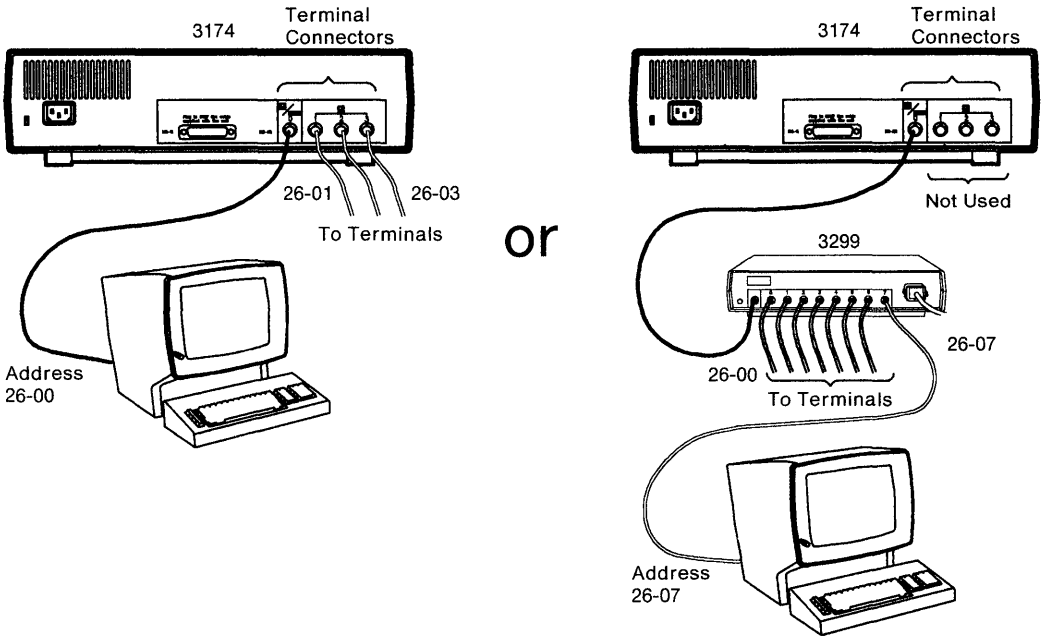

Figure 1-3. 3174 Models 81R, 82R, 91R, and 92R Terminal Configuration

3174 Model Descriptions

Models 81R and 91R contain EIA 232D/CCITT V.24 and CCITT V.35 interfaces for SNA/SDLC, BSC, or X.25 remote link attachment of IBM host.

Models 82R and 92R contain an X.21 interface (CCITT V.11) for SNA/SDLC or X.25 remote link attachment of IBM host.

Operations with Diskettes

The control program microcode and utilities (for example, customizing and diagnostics) are on a diskette.

The controller, as it is received, is not an operational unit. It must be customized with your system configuration prior to its use. For information on customizing your controller locally, see *IBM 3174 Establishment Controller Planning Guide*, GA27-3844. For information on customizing your controller from the central site, see *IBM 3174 Establishment Controller Central Site Customizing User's Guide*, GA23-0342. You should work closely with your site planners and system coordinators when customizing your controller.

For more information on operations with diskettes, see Appendix A, "Diskettes and Diskette Drives."

Status Codes

Operation of the 3174 Models 81R, 82R, 91R, and 92R may depend on the use of status codes and their action plans. After you turn on the controller, it will communicate with status codes prompting you for responses, informing you of the progress of an operation, or indicating that a problem exists. *IBM 3174 Establishment Controller Status Codes*, GA27-3832, is shipped with every controller.

Offline Tests

You should learn how to run the offline tests described in Chapter 5, "Controller Problem Solving and Offline Testing." These tests help you solve problems that occur with your controller.

Online Tests

The microcode provided with the 3174 Establishment Controller contains diagnostic routines called online tests. The online tests provide 3174 controller testing capability while performing normal daily operations. Online tests are described in *IBM 3174 Establishment Controller Customer Problem Determination*, GA23-0217.

Problem Solving

Knowing the results of pertinent tests will enable you to help your support groups, who in turn will help you solve a problem.

The 3174 Establishment Controller and the attached terminals are usually part of a larger network. In order to solve a problem, it usually is necessary to isolate the problem to a particular part of the network. The problem-solving procedures in Chapter 5, "Controller Problem Solving and Offline Testing," will enable you to resolve the more common problems that may occur.

For example, many problems are the result of poor connections; so you may be asked to check cable or terminal connections to find the source of the problem.

If the basic problem solving in Chapter 5, "Controller Problem Solving and Offline Testing," does not help to solve the problem, *IBM 3174 Establishment Controller Customer Problem Determination*, GA23-0217, has more detailed procedures for correcting problems. You may want to contact your technical support group or help desk for assistance in using these procedures.

You should gather all the information available to you before you call for assistance about a problem.

3174 Panels, Switches, and Indicators

The front panel of the IBM 3174 Models 81R, 82R, 91R, and 92R contains an operator panel, a diskette drive, and a diskette storage pocket.

The rear panel of the 3174 contains an AC power plug socket, an AC power indicator, a communication cable connector, and four terminal connectors.

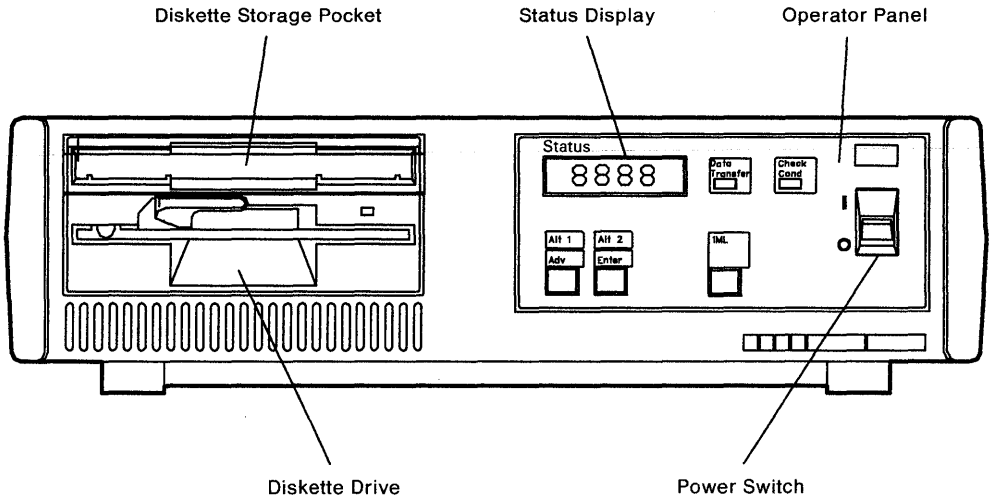

Figure 1-4. 3174 Models 81R, 82R, 91R, and 92R — Front Panel

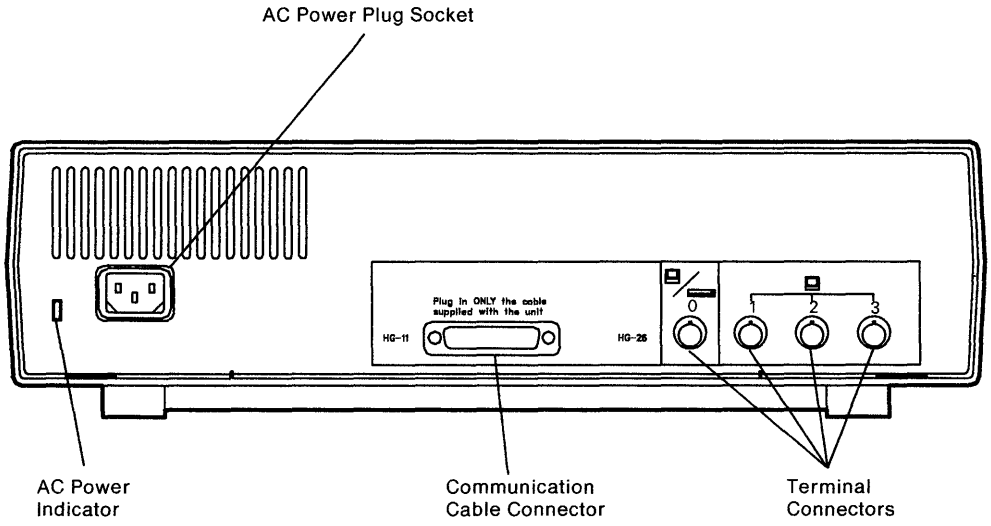

Figure 1-5. 3174 Models 81R, 82R, 91R, and 92R — Rear Panel

Operator Panel

Figure 1-6 shows the operator panel for the 3174 Models 81R, 82R, 91R, and 92R. To turn the controller on and off, see "Making the 3174 Operational" on page 4-2.

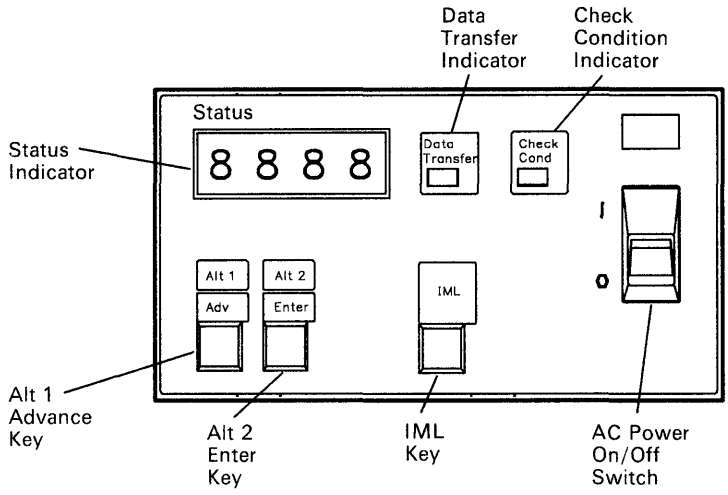

Figure 1-6. 3174 Operator Panel

The functions of the indicators and controls on the 3174 operator panel are as follows.

Indicator or Switch	Description
Status	These four indicators display numeric status codes.
Data Transfer	This indicator is lit or blinking when the controller is transmitting data to the host or receiving data from the host.
Check Condition	This indicator is lit when the controller has a major hardware or microcode failure.
Power	This switch turns the AC voltage to the controller on and off. The controller is turned on by lifting the power switch to | (on). An Initial Microcode Load (IML) sequence starts when you turn on the controller with a customized Control diskette in the diskette drive. You turn off the controller by pressing the power switch to the **O** (off) position.
IML key	When this key is pressed, all indicators on the operator panel are lit, and 8888 is displayed in the Status display. When the key is released, IML tests run, and if no errors are found, operational microcode is loaded into controller storage from a customized Control diskette in the diskette drive. The normal IML is completed when 3174 appears in the Status display. If a failure occurs during any portion of the IML sequence, a status code appears in the Status display. The IML key is also used with the Alt 1 and Alt 2 keys, which are described on the next page.

Dual-Function Keys

The Alt 1/Adv and Alt 2/Enter keys are dual-function keys, each of which is capable of working in conjunction with the IML or power switch, or alone for Advance or Enter functions, as described below:

Switch	Description
Enter	Pressing Enter causes the function indicated in the Status display to be performed. Enter is also used when the controller is operational to display any status codes that may be present during normal operations.
Alt 2	Alt 2 is pressed in conjunction with either IML or a power-on sequence to check out the controller. Alt 2 IML is used whenever hardware problem determination is required. The Utility diskette contains the test microcode and must be installed in the diskette drive. A 2082 status code indicates the successful completion of Alt 2 IML testing.
Adv	The Advance key is used to scroll the Test Menu or to display additional status code fields in the Status display.
Alt 1	Alt 1 is pressed in conjunction with either IML or a power-on sequence to do any of the following: • Customer Setup tests • Customizing procedures • Specific tests. An Alt 1 IML causes a 40 prompt to appear in the Status display. To respond, press Enter to display a menu of procedures (Master Menu) at the terminal connected to terminal connector 0 on the controller or to the 3299 Terminal Multiplexer. Press the Adv key to scroll through the options and the Enter key to select the correct test. The Utility diskette contains the test and customizing microcode and must be installed in the diskette drive.

Rear Panel

Figure 1-7 shows the cables, connectors, and AC power indicator on the 3174 Models 81R, 82R, 91R, and 92R.

Cables and Connectors

Three types of connectors are attached to the rear panel during the customer setup of the 3174 Models 81R, 82R, 91R, and 92R:

- Terminal cables connect the 3174 to the end user terminals.
- The communication cable connects the 3174 to a modem that provides the teleprocessing link to the host computer.
- The AC power cable connects the 3174 to the AC power outlet.

AC Power Indicator

The AC power indicator is located on the left side of the rear panel, next to the power cable. When lit, it indicates that AC power is supplied to the controller.

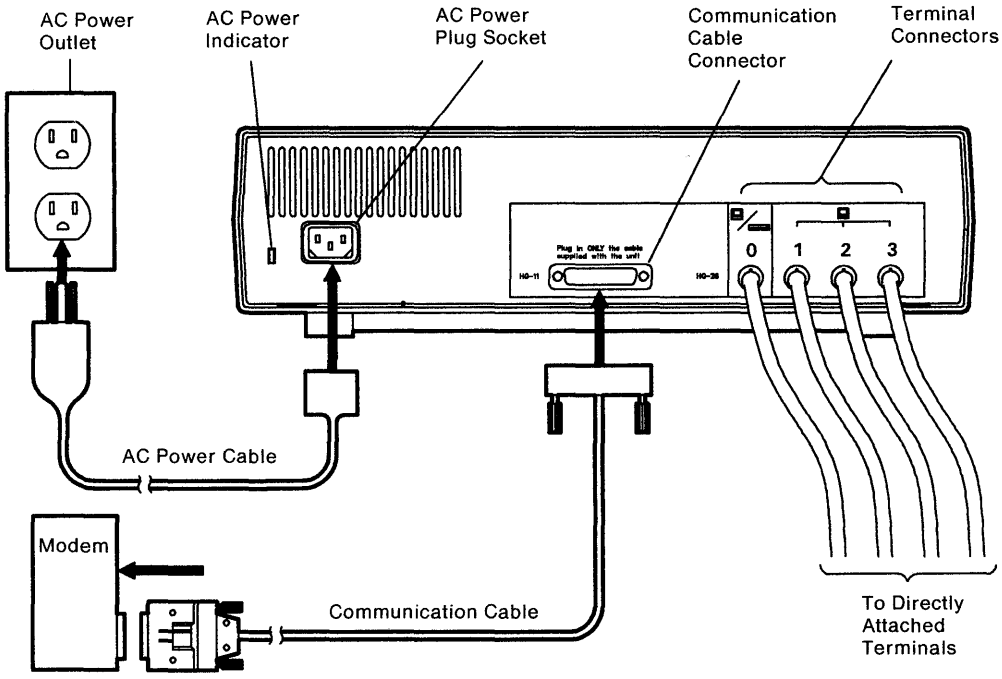

Figure 1-7. 3174 Models 81R, 82R, 91R, and 92R Direct-Connect Cables, Connectors, and AC Power Indicator

Chapter 2. Setting Up the 3174 Controller

Items Shipped with the Controller 2-2
How to Set Up 3174 Models 81R, 82R, 91R, and 92R 2-4

This chapter tells you what items are shipped with the 3174 controller, how to set up models 81R, 82R, 91R, and 92R, and how to verify that the controller is operating correctly.

Items Shipped with the Controller

Note: In the following figure, items shown with gray shading are shipped with a controller only if the controller has the feature installed.

You should receive the following items with the controller:

- Two Control diskettes and one Utility diskette
- One of the following cables, if applicable:
  - Communication cable, either EIA, V.35, or CCITT X.25
  - Communication cable, X.21
- The following publications:
  - *IBM 3174 Establishment Controller Status Codes*, GA27-3832
  - *IBM 3174 Establishment Controller Utilities Guide*, GA27-3853
  - *IBM 3174 Establishment Controller Models 81R, 82R, 91R, and 92R User's Guide*, GA23-0313
  - *IBM 3174 Establishment Controller Models 81R, 82R, 91R, and 92R Maintenance Information*, SY27-8524.

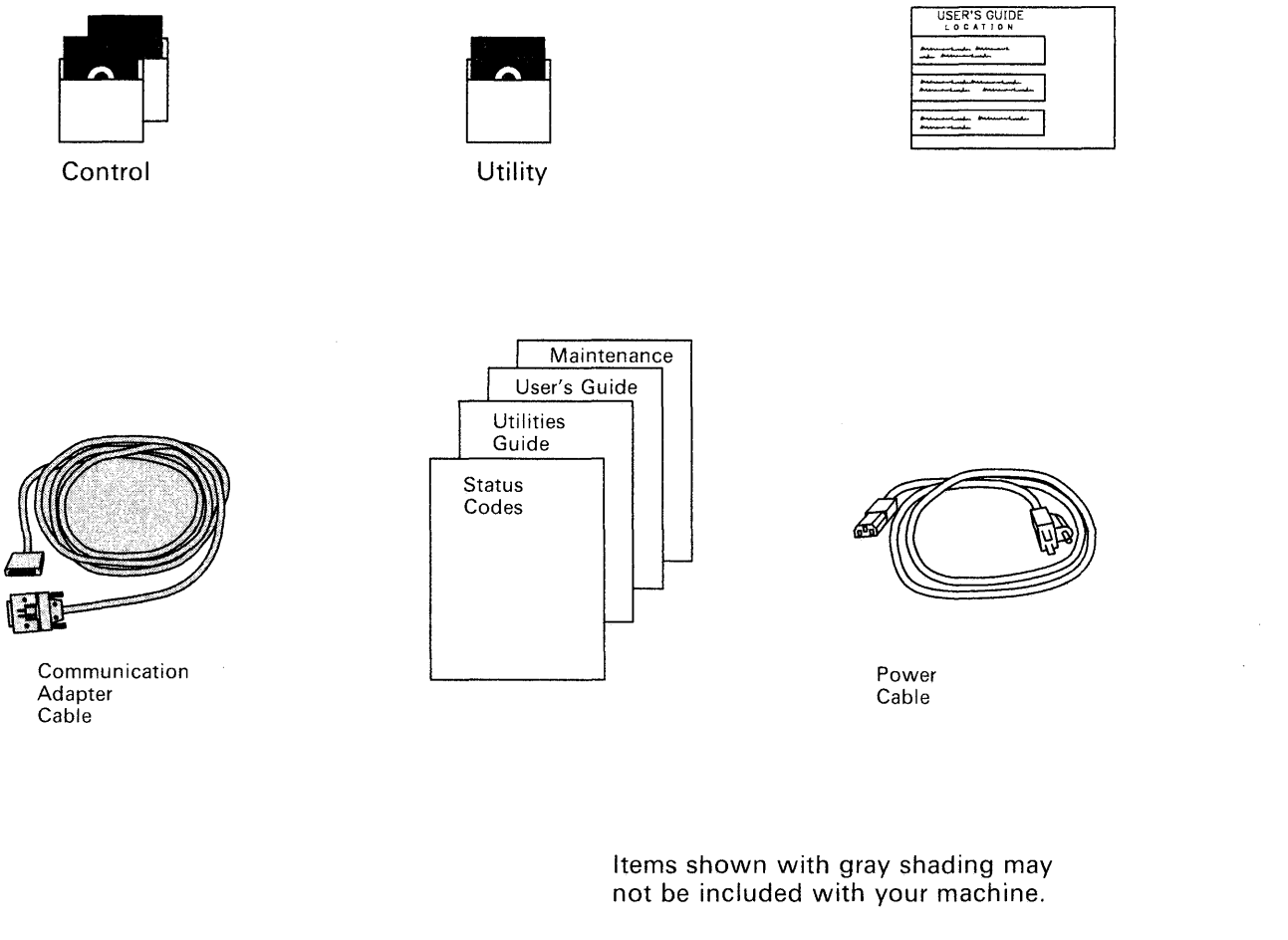

Figure 2-1. Items Shipped with the Controller

The setup instructions start on page 2-4. Read through them completely before actually doing any of the setup tasks. Then return to Step 1 and follow the instructions. While performing the setup, you will be using diskettes. If you need information on the correct way to handle diskettes, see Appendix A, "Diskettes and Diskette Drives."

The following figures show the front and rear of the controller. The labeled items are referred to later in the setup instructions.

Warning: Do not place electrical equipment on top or within 305 millimeters (12 inches) of the sides of the 3174. Placement of equipment close to the 3174 can cause intermittent failures.

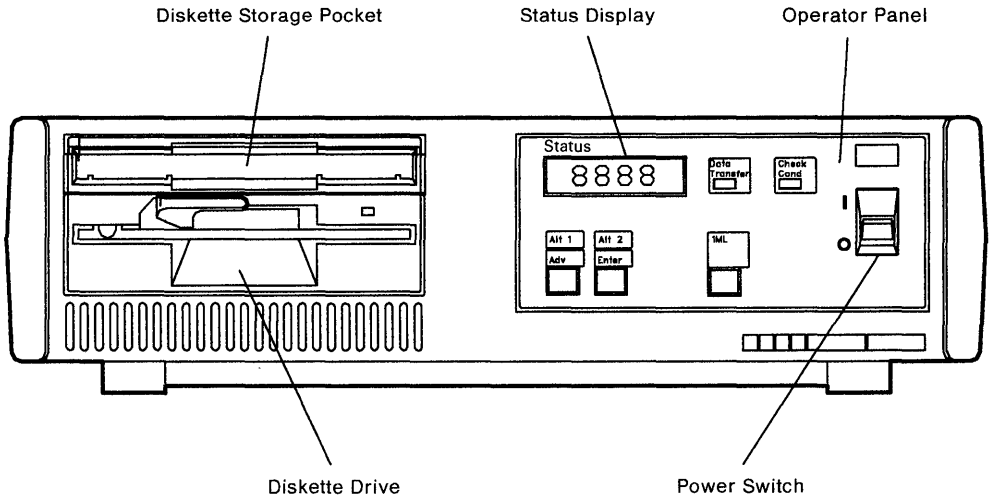

Figure 2-2. 3174 Models 81R, 82R, 91R, and 92R — Front View

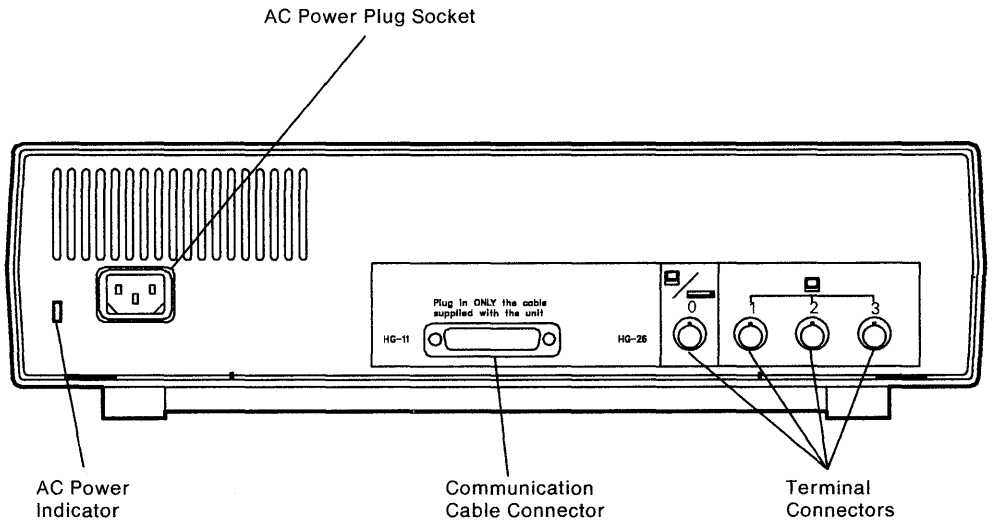

Figure 2-3. 3174 Models 81R, 82R, 91R, and 92R — Rear View

How to Set Up 3174 Models 81R, 82R, 91R, and 92R

1

Press the Power switch to **O** (off).

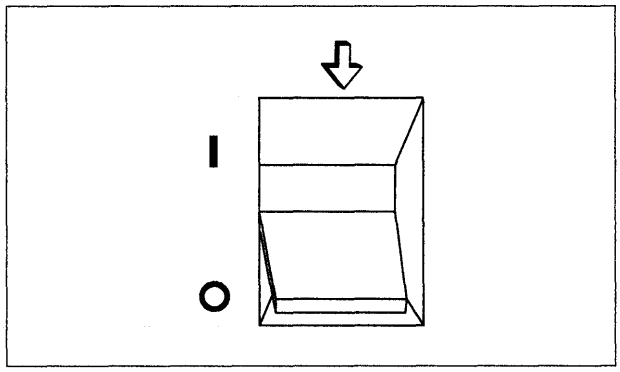

2

Plug the communication cable into the communication adapter on the back of the controller and tighten the thumbscrews.

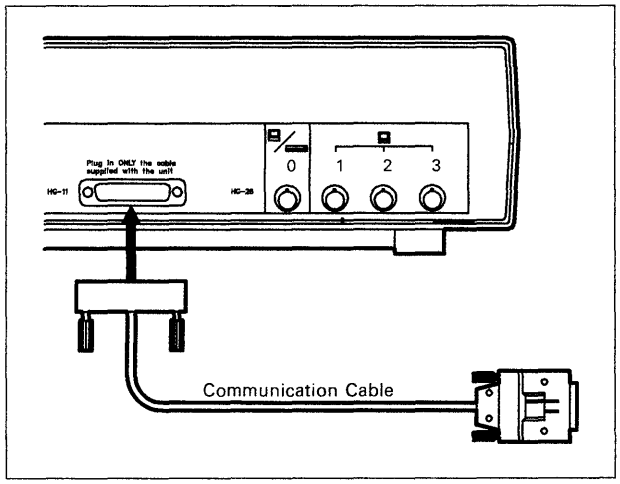

3

Plug one end of the AC power cable into the back of the controller.

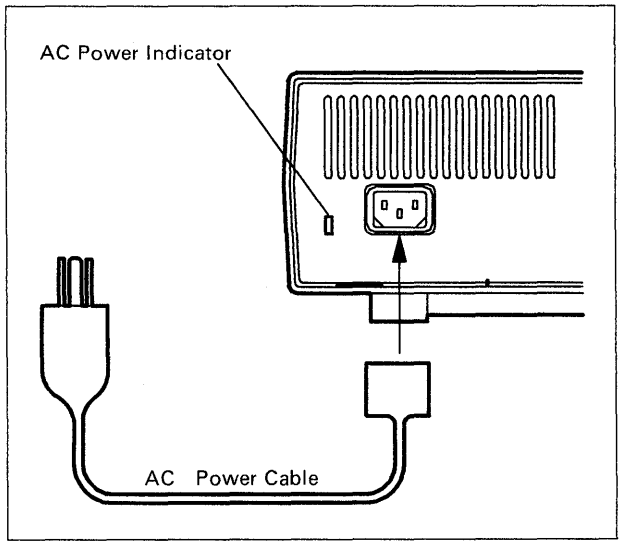

4

CAUTION:
The power plug must be connected to a properly wired and grounded receptacle. An improperly wired receptacle could place a hazardous voltage on accessible metal parts of machines. (For translations of this safety notice, see Safety Notice 6 in *IBM 3174 Safety Notices*, GA27-3824.)

Plug the other end of the power cable into a *grounded* electrical outlet.

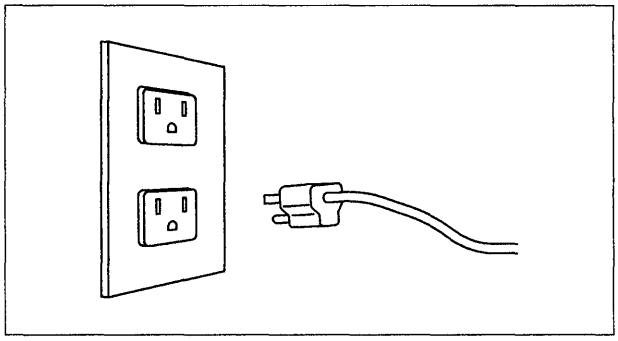

5

Is the AC power indicator lit?

Yes Continue with Step 6.

No Have the power outlet checked by a qualified electrician.

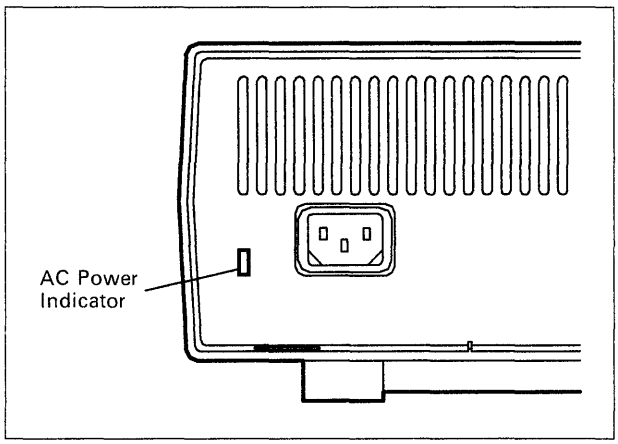

6

Set the TEST/OPER switch on the communication adapter cable to the setting specified below for your cable part number.

- For cables with part number 6168155, 6423153, or 6423155:
  1. Set the TEST/OPER switch to TEST.
  2. Continue with Step 7.

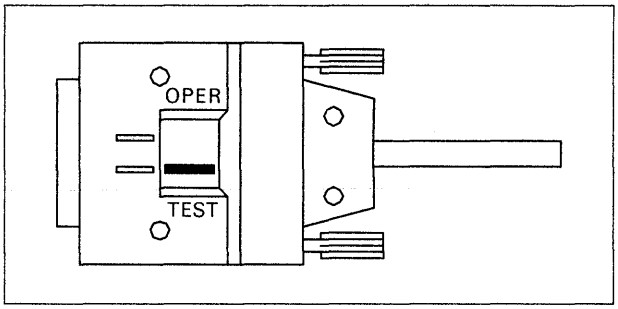

- For cables with part number 39F7858:
  1. Set the TEST/OPER switch to TEST.
  2. Continue with Step 7.

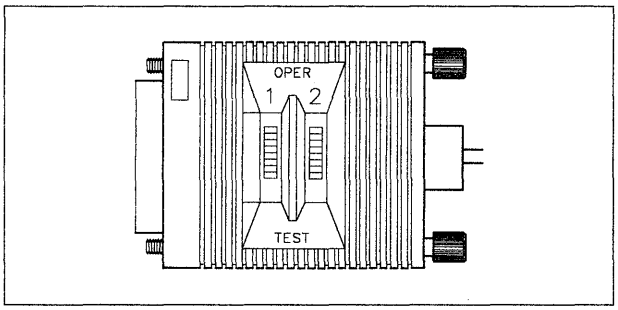

- For cables with *three* TEST/OPER switches:
  1. Set all three switches to TEST.
  2. Continue with Step 7.

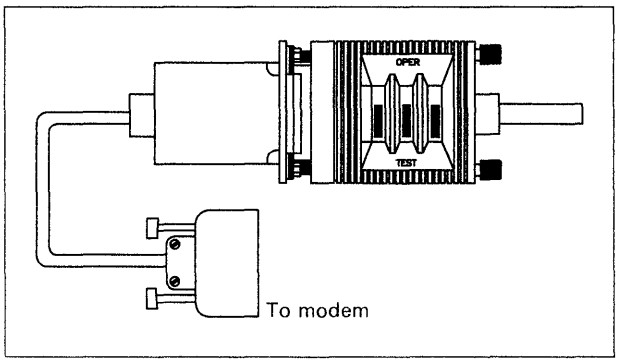

7

Open the lever on the diskette drive and remove the cardboard shipping insert. Store the insert in the diskette storage pocket.

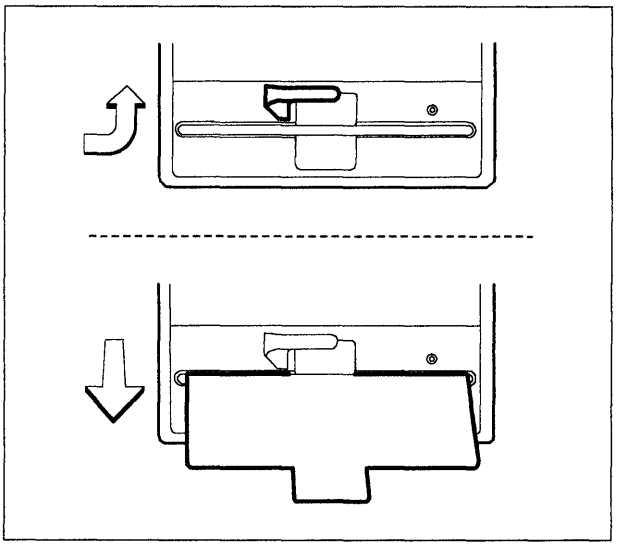

8

Remove the Utility diskette from its envelope.

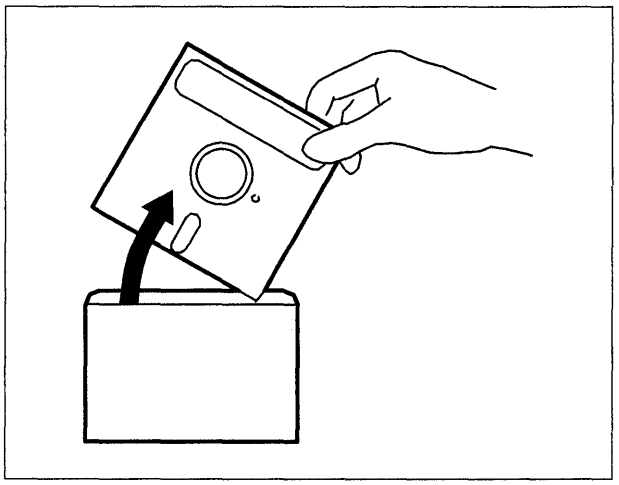

9

Insert the Utility diskette, with the label facing up, into the diskette drive. Close the lever to lock the drive.

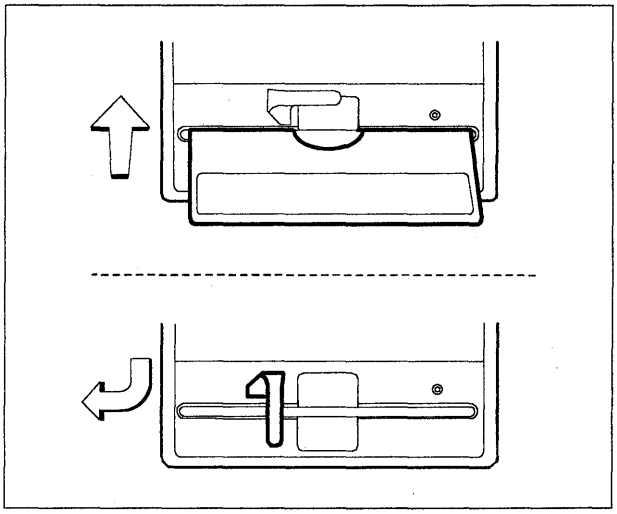

10

For the following steps, if the correct numbers do not appear in the Status display, see *IBM 3174 Establishment Controller Status Codes*, GA27-3832.

Press and hold Alt 1 and lift the power switch to the | (on) position. Continue holding Alt 1.

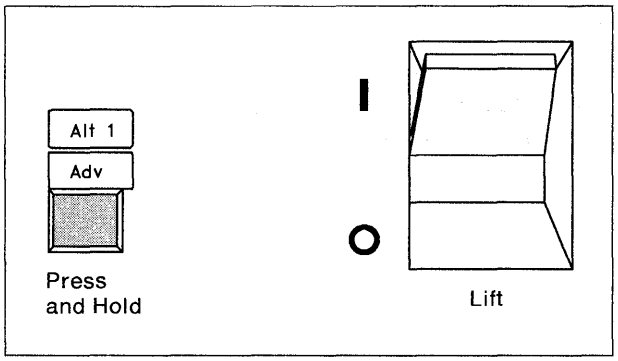

11

Continue holding Alt 1 until 31 appears in the Status display.

Release Alt 1.

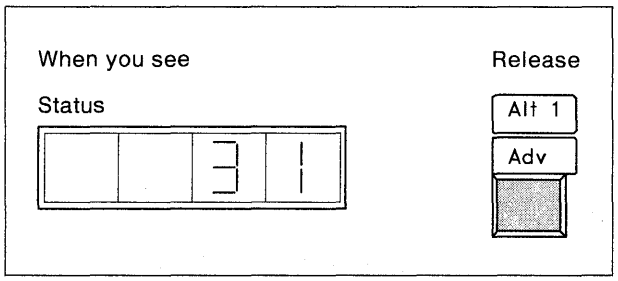

12

When 40 appears in the Status display, repeatedly press the Adv key until 81 appears in the Status display.

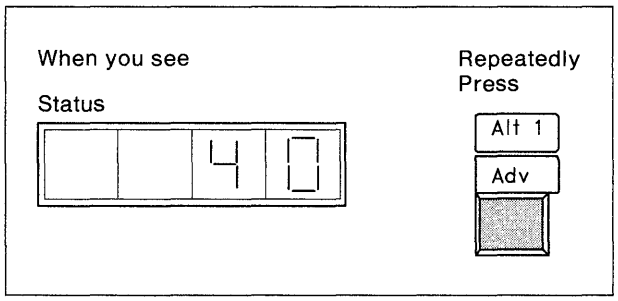

13

With 81 displayed in the Status display, press Enter. 81– – will be displayed.

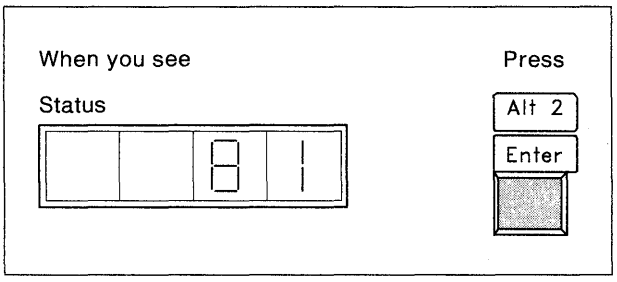

14

With 81 – – in the Status display, press Enter.

Tests run, and progress numbers appear in the Status display. The tests may take up to 3 minutes to run.

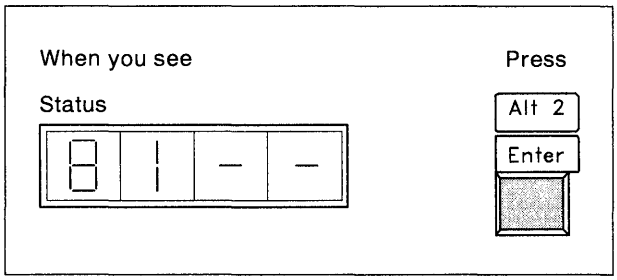

15

After the tests are successfully completed, 2081 appears and remains in the Status display.

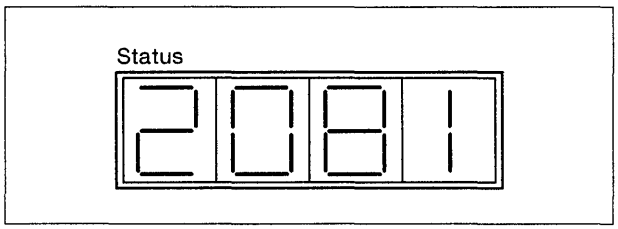

16

Set the TEST/OPER switch(es) on the communication cable to OPER.

Note: For V.35 communication cables with one switch, remove the wrap plug (the switch should already be set to OPER).

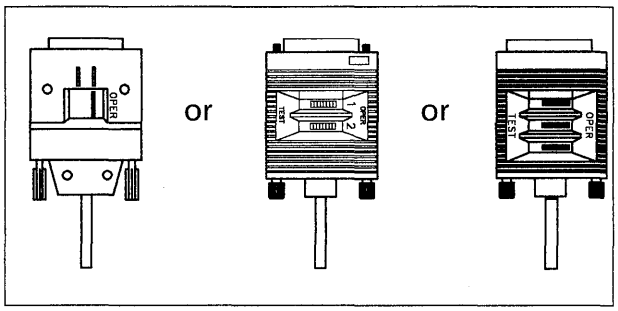

17

Connect the cable to the appropriate modem. Refer to the modem documentation if necessary.

Note: In some countries, modems may require different metric-threaded thumbscrews than those currently installed in the communication adapter cable (part numbers 6423153 and 6423155). If the cable will not attach to the modem, it may be necessary to replace the thumbscrews with the two new ones provided with the cable.

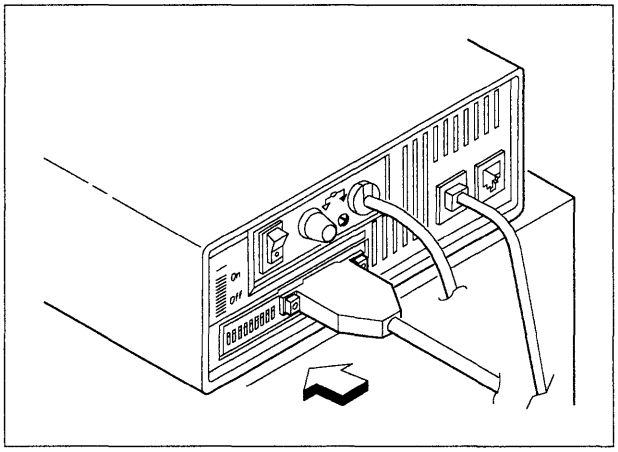

18

Open the diskette drive lever and remove the Utility diskette. Insert the diskette into its envelope and store it in the storage pocket.

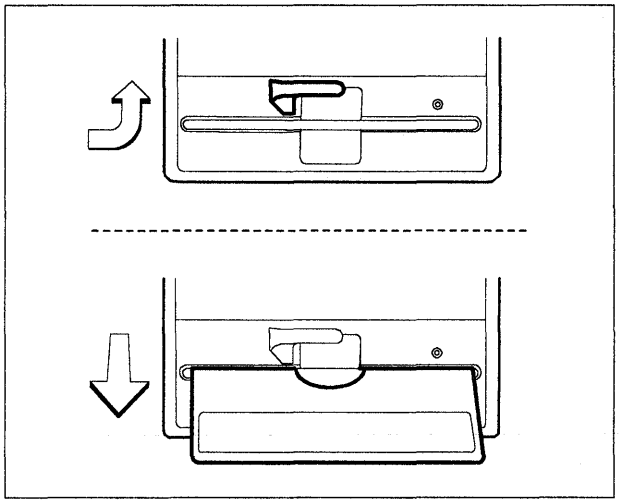

19

Initial setup and controller checkout are complete.

To make the 3174 operational, you must:

1. Connect the terminals (see Chapter 3, "Cables and Connections")
2. Customize the controller (refer to *IBM 3174 Establishment Controller Utilities Guide*, GA27-3853)
3. Go to "Making the 3174 Operational" on page 4-2.

Chapter 3. Cables and Connections

How to Connect Cables 3-2
Terminal Cable Connectors 3-2
Modular Plugs 3-2
Terminal Adapter Connectors 3-3
Host Connection 3-3
3270 Terminal Port Addresses 3-4
For Terminals Directly Connected to the Terminal Adapter 3-4
For Terminals Indirectly Connected to the Terminal Adapter 3-4
3174 Ports and Cables 3-5
Sample Configuration 3-5

This chapter contains information on cabling for terminals and host connections. Illustrations are provided to show some typical configurations and controller port addressing. More information on cabling accessories can be found in Appendix B, "Cable Accessories."

CAUTION:
To avoid the possibility of electrical shock, disconnect all power plugs before installing or removing a feature. Do not reconnect power plugs until the installation or removal has been completed. (For translations of this safety notice, see Safety Notice 1 in *IBM 3174 Safety Notices*, GA27-3824.)

How to Connect Cables

The following diagrams illustrate how to connect cables. In the problem solving procedures in Chapter 5, "Controller Problem Solving and Offline Testing," you are asked to check cable connections. It is important that you know how to connect cables correctly.

Terminal Cable Connectors

CAUTION:
Do not connect or disconnect cables during periods of lightning activity. (For translations of this safety notice, see Safety Notice 5 in *IBM 3174 Safety Notices*, GA27-3824.)

To connect a coaxial cable to a terminal (3278 shown), grip the cable by the knurled connector ring, push the cable connector over the connector on the terminal, and turn the cable connector clockwise about one quarter of a turn to lock it securely into place.

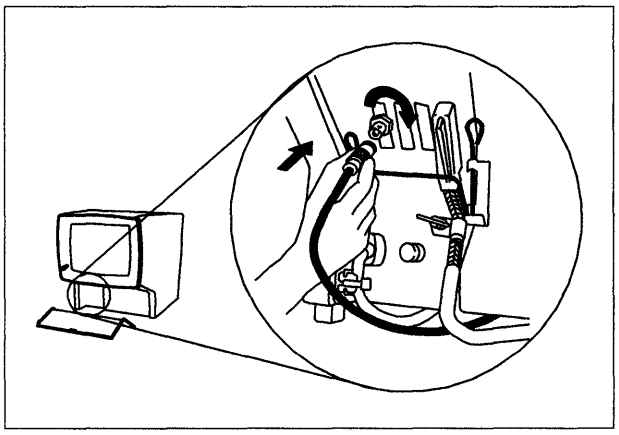

Modular Plugs

CAUTION:
Do not connect or disconnect cables during periods of lightning activity. (For translations of this safety notice, see Safety Notice 5 in *IBM 3174 Safety Notices*, GA27-3824.)

To connect a plug (a 6-pin modular plug is shown here), grip the cable by the connector and push it into the wall jack until it clicks securely into place.

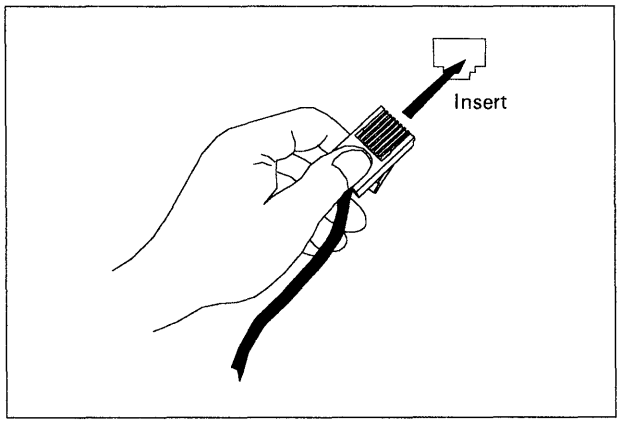

Terminal Adapter Connectors

CAUTION:
Do not connect or disconnect cables during periods of lightning activity. (For translations of this safety notice, see Safety Notice 5 in *IBM 3174 Safety Notices*, GA27-3824.)

Shown here are the ports on the Terminal Adapter on the back of the controller.

To connect cables, push the cable over the connector and turn it clockwise about one quarter of a turn to lock it securely into place.

To determine the addresses for port connectors, see "3270 Terminal Port Addresses" on page 3-4.

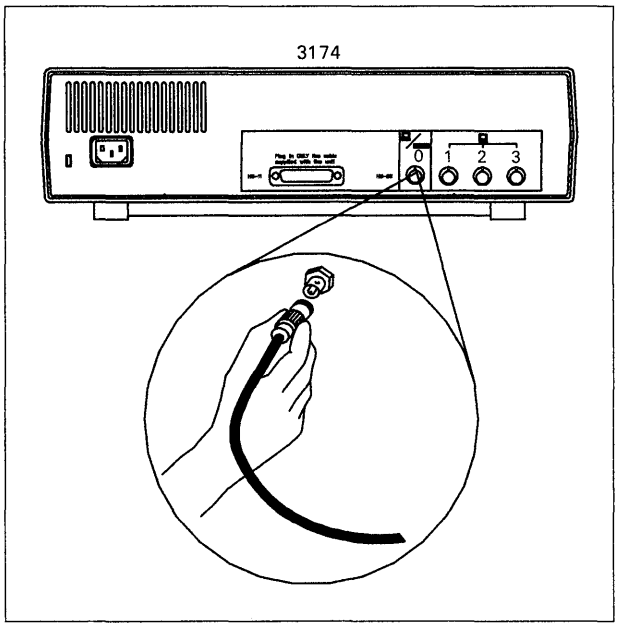

Host Connection

CAUTION:
Do not connect or disconnect cables during periods of lightning activity. (For translations of this safety notice, see Safety Notice 5 in *IBM 3174 Safety Notices*, GA27-3824.)

To connect the host communication adapter to a modem, refer to the modem documentation.

Note: In some countries, modems may require different metric-threaded thumbscrews than those currently installed in the communication adapter cable (part numbers 6423153 and 6423155). If the cable will not attach to the modem, it may be necessary to replace the thumbscrews with the two new ones provided with the cable.

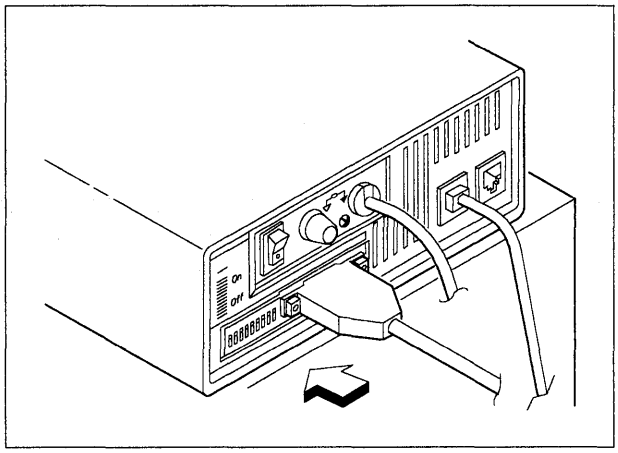

3270 Terminal Port Addresses

This section explains terminal and port addresses, which is accomplished in two steps.

The first step is to determine the configuration layout for the terminals. This involves the assignment of an address to a terminal. Address assignment is performed when cabling worksheets are filled out as part of planning for customizing. Cabling worksheets are in *IBM 3174 Establishment Controller Site Planning*.

The second step is to determine which physical port on the controller gives you the address called for on the cabling worksheet. For example, assume the worksheet has a 3278 addressed as 26-00. The 26 represents the Hardware Group (HG) number and is assigned to all 3270-type terminals. The 00 represents the port address and is always two digits. Port addresses start with 00, so in this case this 3278 will be connected to the first port (labeled with only a single 0).

There are two ways to connect a terminal to the 3174:

- *Directly*, where the terminal is connected to the port on the terminal adapter port (located on the rear panel).
- *Indirectly*, where the terminal is connected to a terminal adapter port via an external terminal multiplexer, such as a 3299.

For Terminals Directly Connected to the Terminal Adapter

If a terminal is *directly* connected to the Terminal Adapter, its port number, or terminal port address, is the same as the Terminal Adapter port number. For example, if the terminal is connected to Terminal Adapter port 3, its terminal port address is 03.

For Terminals Indirectly Connected to the Terminal Adapter

If a terminal is *indirectly* connected to a Terminal Adapter port via a 3299, its port number, or terminal port address, is the same as the 3299 port.

3174 Ports and Cables

Sample Configuration

Figure 3-1 identifies the ports and cables in a sample of cabling layout for 3174 Models 81R and 82R. For additional information on cable accessories, see "3174 Cables, Plugs, and Accessories" on page B-2.

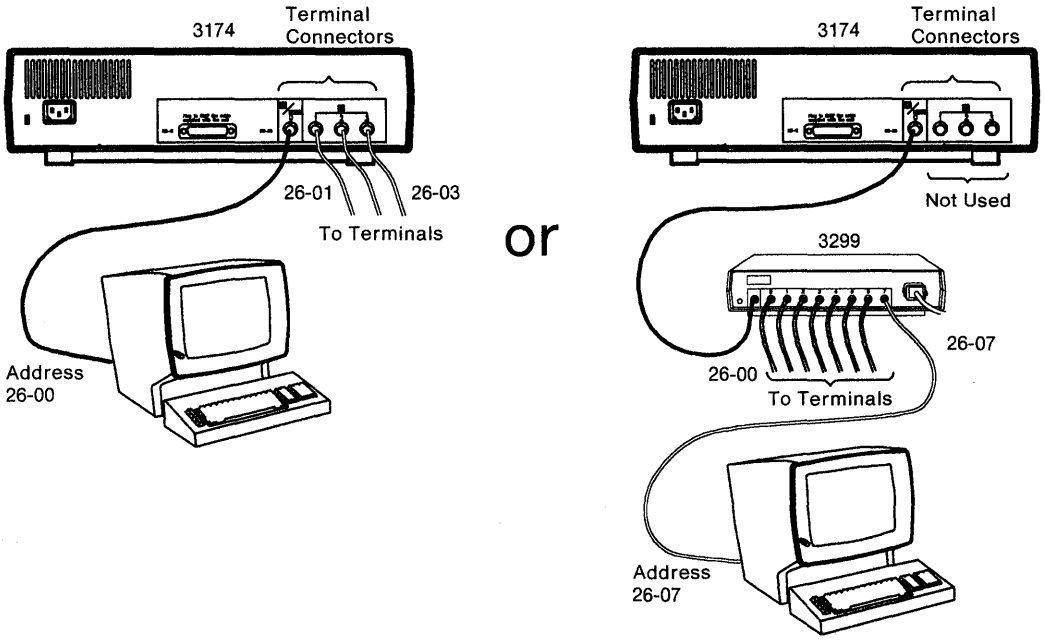

Figure 3-1. Sample Cabling Layout of 3174 Models 81R, 82R, 91R, and 92R

The following 3174 Cabling Worksheets 6 and 7 are samples of completed worksheets using indirect and direct connections, respectively.

3174 Cabling Worksheet 6

3299 TERMINAL MULTIPLEXER PORT RANGE 00 - 07

Complete this worksheet during site planning and use it during cable installation and terminal connection problem determination. Store this worksheet with the 3174 control unit documentation for future reference. When cabling changes are made, correct this worksheet to reflect such changes.

3174 Model *81R*
3174 Location *060*
3174 I.D. *22*

3174 M81/82

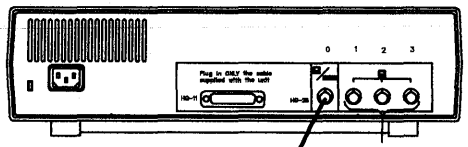

Not Used

3299

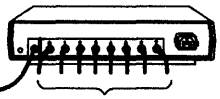

To Terminals

Note: If a 3299 Terminal Multiplexer is attached to connector 0, then no terminals can be attatched to connectors 1-3.

FROM 3174 TO 3299 TERMINAL MULTIPLEXER CABLING

3174 Connector	3299 Cable ID	3299 Model	3299 Location	3299 ID or Number
0	*060-001*	*3*	*060-A01*	*12*

FROM 3299 TERMINAL MULTIPLEXER TO TERMINAL CABLING

TERMINAL PORT RANGE 00-07

3299 Connector	Terminal Cable ID	Terminal Type	Terminal Location	Terminal Port	Primary Host Address
0	*060-002*	*3279*	*060-B05*	26-00	
1	*060-003*	*3278*	*060-C20*	26-01	
2	*060-004*	*3279*	*060-C15*	26-02	
3	*060-005*	*3278*	*060-D16*	26-03	
4	*060-006*	*3279*	*060-D22*	26-04	
5	*060-007*	*3278*	*060-E12*	26-05	
6	*060-008*	*3279*	*060-E23*	26-06	
7	*060-009*	*3278*	*060-F07*	26-07	

Figure 3-2. Sample Configuration Using 3299 Terminal Multiplexer

3174 Cabling Worksheet 7

3174 TO TERMINAL CABLING (DIRECT CONNECTION)

Complete this worksheet during site planning and use it during cable installation and terminal connection problem determination. Store this worksheet with the3174 control unit documentation for future reference. When cabling changes are made, correct this worksheet to reflect such changes.

3174 Model *81R*
3174 Location *061*
3174 I.D. *15*

Complete the connection for each DIRECT ATTACHED terminal to be installed

3174 M81/82

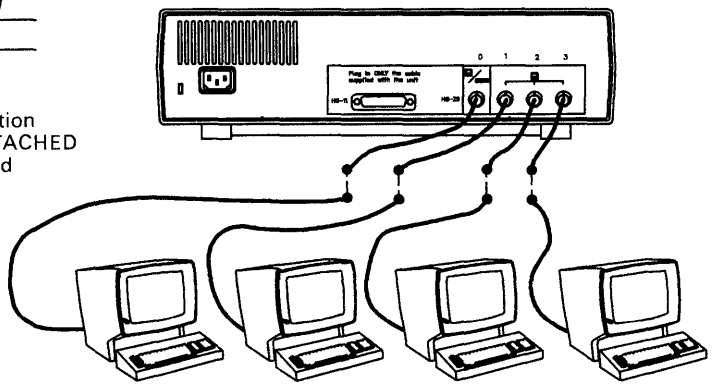

Note: If a 3299 Terminal Multiplexer is attached to connector 0, then no terminals can be attached to connectors 1-3.

FROM 3174 TO TERMINAL CABLING

	Direct Connect				
3174 Connector	**Terminal Cable ID**	**Terminal Type**	**Terminal Location**	**Terminal Port**	**Primary Host Address**
0	*061-001*	*3278*	*060-H20*	26-00	
1	*061-002*	*3278*	*060-H22*	26-01	
2	*061-003*	*3279*	*060-G19*	26-02	
3	*061-004*	*3279*	*060-G21*	26-03	

Figure 3-3. Sample Configuration Using Direct Connection

Chapter 4. Operation

Making the 3174 Operational 4-2
To IML the 3174 with Power On 4-3
To IML the 3174 with Power Off 4-4
Taking the 3174 Offline 4-4

Making the 3174 Operational

The 3174 is operational when actively communicating to the host. A customized Control diskette is required to make the 3174 operational. For instructions on customizing a diskette, see *IBM 3174 Establishment Controller Utilities Guide*, GA27-3853.

An Initial Microcode Load (IML) sequence causes some basic controller tests to run. If these tests run without error, microcode is then loaded from the diskette.

You can start a normal IML in one of three ways:

- By pressing IML whiie power is on
- By turning on the 3174 (also called a power-on IML)
- By having the host site do a remote IML using NetView™ Distribution Manager.

If you get unexpected results at any time, see Chapter 5, "Controller Problem Solving and Offline Testing," or *IBM 3174 Establishment Controller Customer Problem Determination*, GA23-0217. If you receive a status code, see *IBM 3174 Establishment Controller Status Codes*, GA27-3832.

NetView is a trademark of the International Business Machines Corporation.

To IML the 3174 with Power On

1

Insert a properly customized Control diskette into the diskette drive.

Close the diskette drive lever.

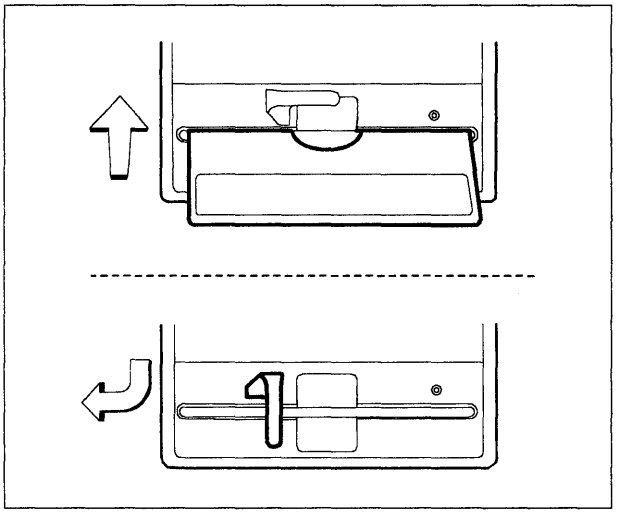

2

Press and release the IML key.

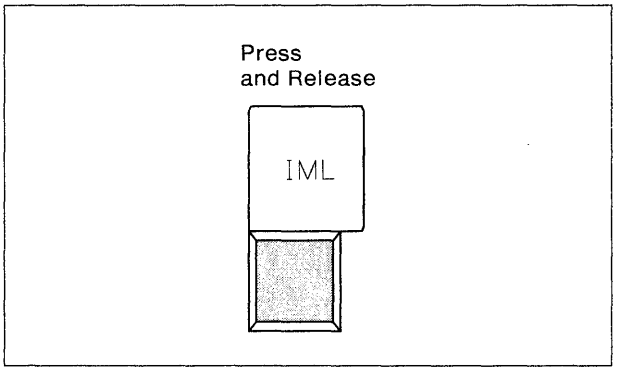

3

IML progress codes should appear in the Status display. IML takes about 3 minutes and is complete when 532 appears in the display.

If 532 remains in the display, ask the host operator to bring the controller online. When the controller is online, 3174 is displayed.

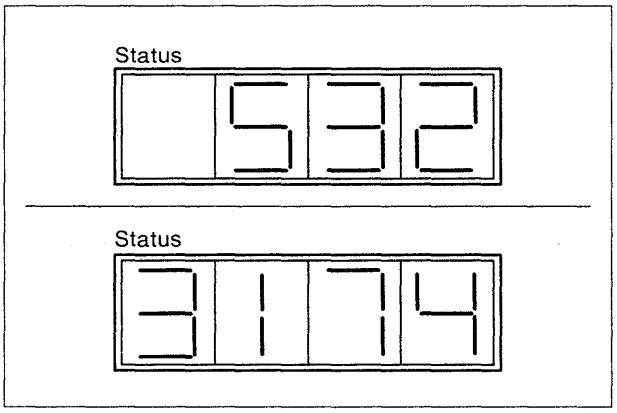

To IML the 3174 with Power Off

1
Insert a properly customized Control diskette into the diskette drive.

Close the diskette drive lever.

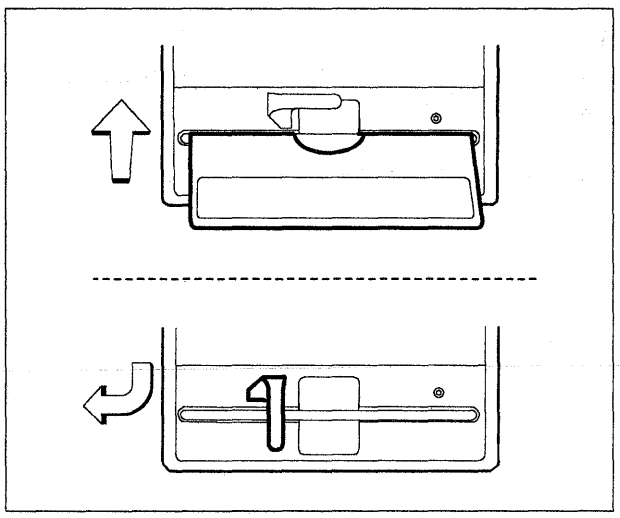

2
Lift the Power switch to the | (on) position.

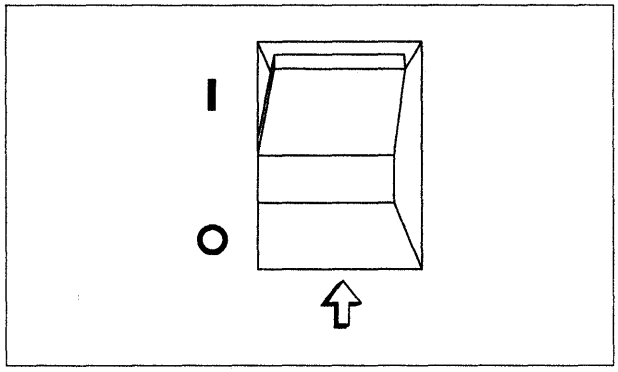

3
IML progress codes should appear in the Status display. IML takes about 3 minutes and is complete when 532 appears in the display.

If 532 remains in the display, ask the host operator to bring the controller online. When the controller is online, 3174 is displayed.

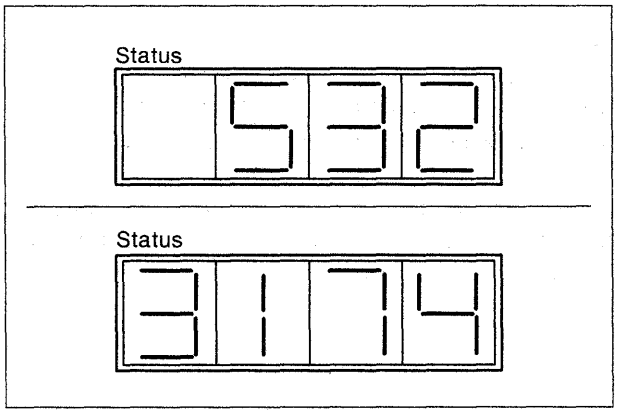

Taking the 3174 Offline

The host operator must take the 3174 offline.

Chapter 5. Controller Problem Solving and Offline Testing

Problem Solving 5-3
Offline Tests 5-6
Alt 2 IML 5-6
Alt 1 IML 5-8

This chapter contains basic problem-solving procedures and offline test procedures.

The problem-solving procedures are divided into three columns. The first column describes the problem. The second column lists some possible causes in the order of possibility. The third column lists a brief action that you can take to solve the problem.

To do problem solving, you are expected to find and correct such problems as loose connections, units with power off, cables and power cords not plugged in, and wrong diskettes.

You will note that some actions advise you to "contact your help desk." At that time, depending on your level of knowledge and experience with 3174 Establishment Controller operation, you can use *IBM 3174 Establishment Controller Customer Problem Determination*, GA23-0217, or obtain help from your technical support group.

Offline tests include Alt 1 and Alt 2 IML procedures. It describes, step by step, how to run these tests.

Problem Solving

CAUTION:
Do not work on the equipment during periods of lightning activity. (For translations, of this safety notice, see Safety Notice 4 in *IBM 3174 Safety Notices*, GA27-3824.)

Problem	Possible Cause	Action
One 3270-type terminal is experiencing problems.	Loose cable between 3174 and terminal.	Check cable connections.
	Terminal security key lock is off.	Turn on security key lock.
	Terminal has a problem.	Do terminal problem determination.
	A terminal multiplexer port (such as a 3299) between the 3174 and the terminal/printer is failing.	Try another multiplexer port or a new multiplexer.
	A port on the 3174 is failing.	Contact the help desk.
	The 3174 Control disk is not customized correctly.	Contact the help desk.
	None of the above.	Contact the help desk.
One host connection is experiencing problems.	Loose cable connections between the 3174 and the host.	Check the cable connections.
	Modems between the 3174 and the host are not powered on.	Check modem power switch and make sure modem power cord is plugged in.
	Defective power outlet for a modem.	Have the power outlet checked.
	Host has not put the 3174 online.	Contact the host operator.
	The 3174 Control disk is not customized correctly.	Contact the help desk.
	None of the above.	Contact the help desk.

Problem	Possible Cause	Action
All terminals and hosts attached to this 3174 are experiencing problems.	3174 power switch is not on.	Turn on 3174 power switch.
	Defective power outlet for the 3174.	Check 3174 power outlet.
	3174 not IMLed with customized Control diskette.	Check for proper diskette.
	Control diskette is defective.	Try using the backup Control diskette.
	Defective rotary on switched phone lines.	Check rotary.
	Host has not put the 3174 online.	Contact the host operator.
	The 3174 Control disk is not customized correctly.	Contact the help desk.
	None of the above.	Contact the help desk.
No power on the 3174.	3174 power switch is off.	Check the 3174 power switch.
	Power cord is not plugged in at both ends.	Reseat the 3174 power cord.
	Defective power outlet.	Have the power outlet checked.
	None of the above.	Contact the help desk.

Problem	Possible Cause	Action
Cannot correctly IML 3174.	Incorrect diskette in the 3174.	Check for the proper diskette.
	Diskette incorrectly inserted into the 3174.	Check diskette.
	Control diskette is defective.	Try using a backup copy.
	None of the above.	Contact the help desk.
IML appears successful, but no terminals or hosts can communicate with the 3174.	3174 not IMLed with customized Control diskette.	Check diskette.
	Control diskette is defective.	Try using backup copy.
	Host has not put the 3174 online.	Contact the host operator.
	The 3174 Control disk is not customized correctly.	Contact the help desk.
	None of the above.	Contact the help desk.
Status Code.		See *IBM 3174 Establishment Controller Status Codes*, GA27-3832, or contact your help desk.
All other problems.		See *IBM 3174 Establishment Controller Customer Problem Determination* manual, GA23-0217, or contact your help desk.

Offline Tests

This section tells you how to do a general controller test (using Alt 2 IML or Alt 1 IML) and how to do specific tests (using Alt 1 IML) on the communication adapter and cable. *IBM 3174 Establishment Controller Customer Problem Determination* contains more information on offline testing procedures.

The Alt 2 IML test stops if it detects an error. To continue testing other areas of the controller, key in **1** (from the operator keypad) and press Enter. This is called the *Continue* function.

If you want to stop testing or select another operation after an error, press Enter. This is called the *Free* function. The Free function resets the function in progress and 4001 appears in the Status display, indicating that the controller is ready for a new request.

To correct a keystroke mistake, press Clear and start over.

Alt 2 IML

Warning: This procedure interrupts all controller operation. Notify other users if necessary.

1

Ask the host operator to take the controller offline.

2

Insert the Utility diskette into the diskette drive and close the drive lever.

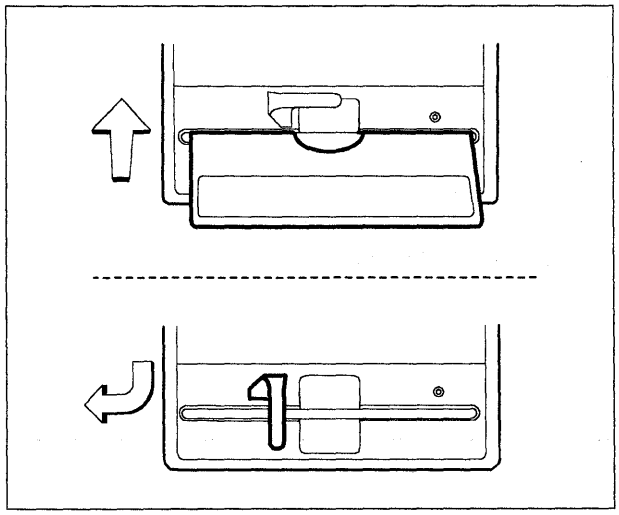

3

1. Press and hold Alt 2.
2. Press and release IML.
3. Release Alt 2.

The tests run for about 4 minutes and progress numbers appear in the Status display of the operator panel.

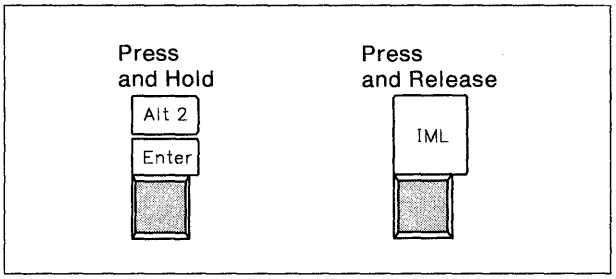

4

Is 2082 displayed in the Status display?

Yes The basic 3174 controller tests ran successfully.

No Look up the status code in *IBM 3174 Establishment Controller Status Codes* and do the recommended action.

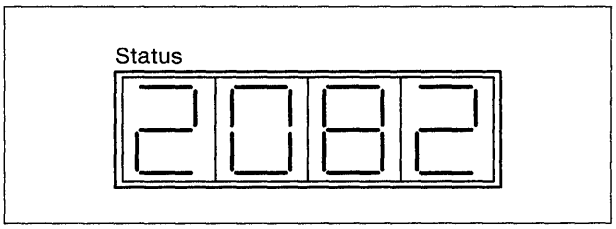

Alt 1 IML

In this procedure after the Alt 1 IML, the offline communication adapter and cable test is performed.

Warning: This procedure interrupts all controller operation. Notify other users if necessary.

1

Ask the host operator to take the controller offline.

2

Insert the Utility diskette into the diskette drive, and close the drive lever.

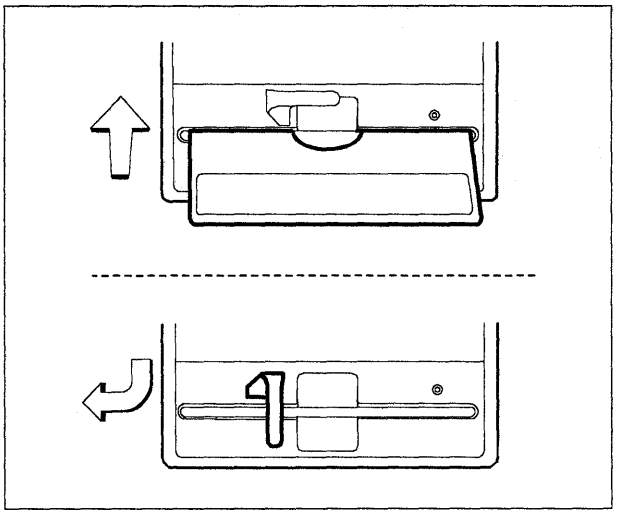

3

Set the TEST/OPER switch on the communication adapter cable to the setting specified below for your cable part number.

- For cables with part number 6423153 or 6423155:
  1. Set the TEST/OPER switch to TEST.
  2. Continue with Step 4.

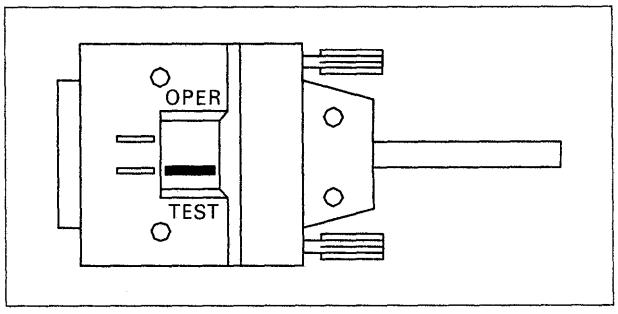

• For cables with part number 39F7858:

1. Set the TEST/OPER switch to TEST.
2. Continue with Step 4.

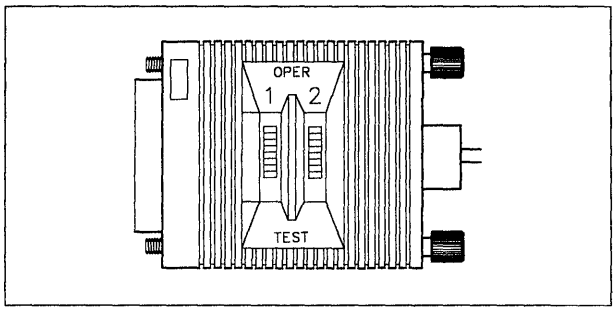

• For cables with *three* TEST/OPER switches:

1. Set all three switches to TEST.
2. Continue with Step 4.

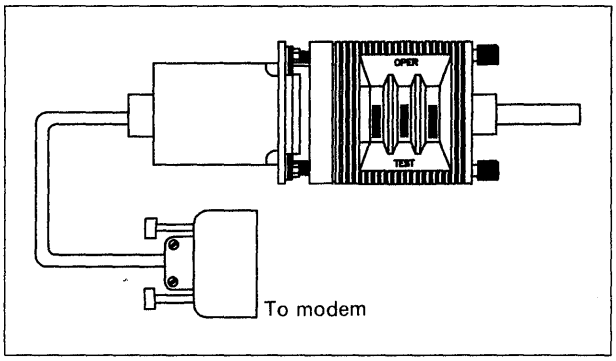

4

1. Press and hold Alt 1.
2. Press and release IML.
3. Release Alt 1.

Note: If 40 does not appear in the Status display within 5 seconds, do this step again.

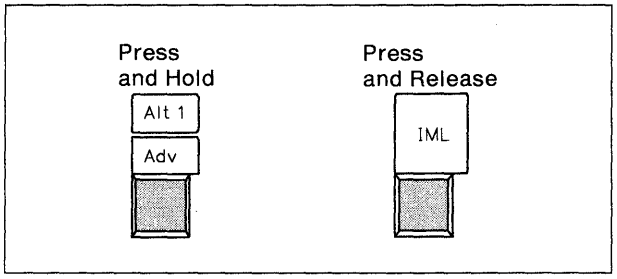

5

After 40 appears in the Status display, press Adv until you see 80 displayed.

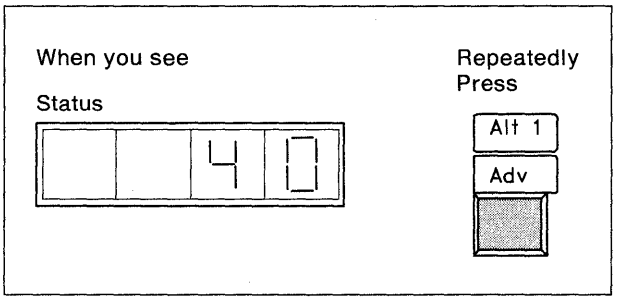

6

With 80 displayed, press and release Enter.

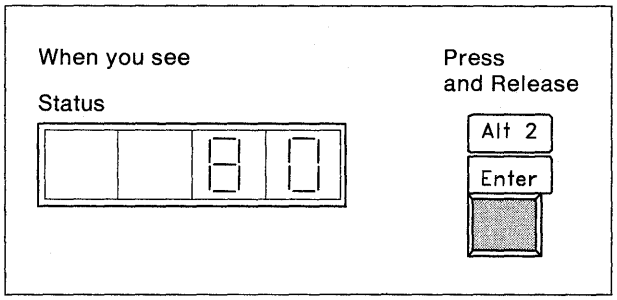

7

With 80-- displayed, press Enter.

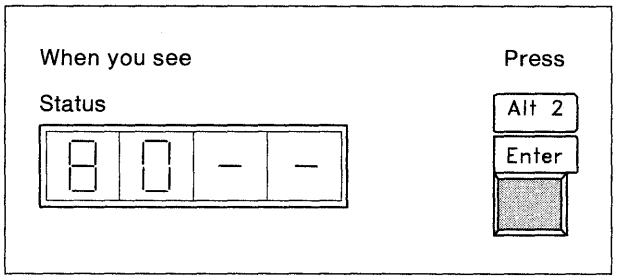

8

When you see 4001, press Adv until you see 11 displayed.

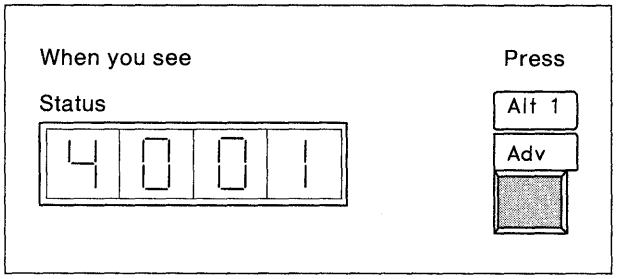

9

With 11 displayed, press Enter.

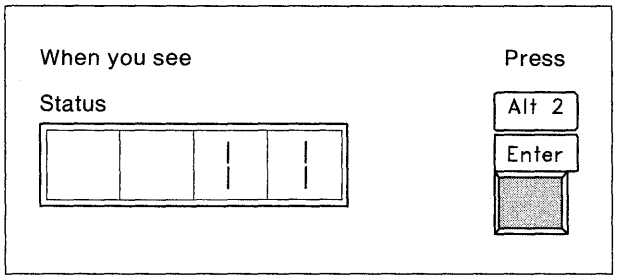

10

With 11-- displayed, press Adv until you see 01 displayed.

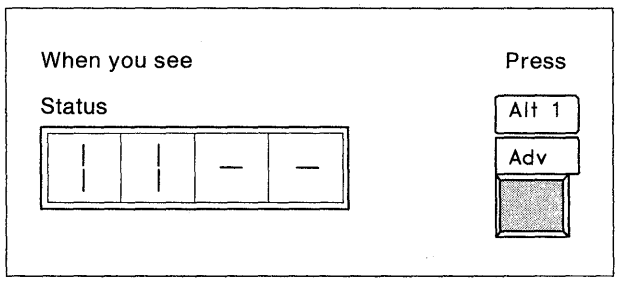

11

With 01 displayed, press Enter.

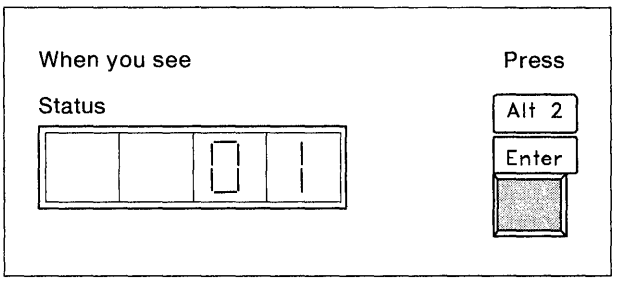

12

With 1101 displayed, press Enter to run the communication adapter and cable test.

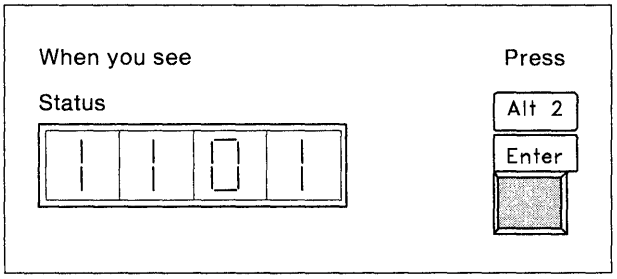

13

After the test of the communication adapter and cable is complete, a status code remains in the display. For status codes other than those shown, see *IBM 3174 Establishment Controller Status Codes*.

Status Code	Action
2011	The communication adapter and cable are OK. Continue with Step 14.
3030	There is a problem with the communication adapter or with the cable.
	Press Adv and record the status code.
	Press Adv a second time, and record the status code.
	Press Adv a third time, and record the status code. Request service for the control unit. Describe the problem and report all the status codes.

14

Set the TEST/OPER switch(es) on the communication cable to OPER.

Note: For V.35 communication cables with one switch, remove the wrap plug, and connect the cable to the modem.

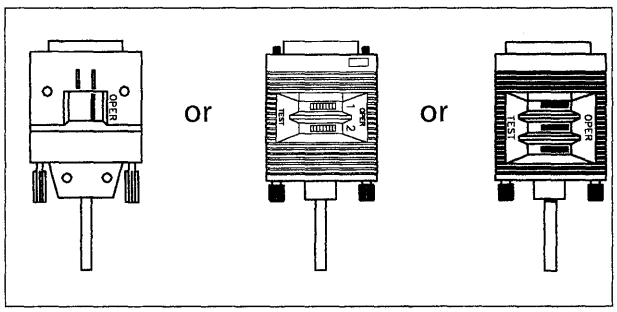

To make the controller operational, see "Making the 3174 Operational" on page 4-2.

Chapter 6. Relocation Instructions

How to Relocate the 3174 Controller 6-2

How to Relocate the 3174 Controller

When planning to relocate the controller, consider the following:

Packing Decide whether you need to pack the controller before moving it. It is recommended that the controller be packed if it is going to another building. If you decide to pack the controller, call your IBM marketing representative and order a set of packing materials. Allow 4 weeks for delivery.

Site Preparation Use the procedures in *IBM 3174 Establishment Controller Site Planning*, GA23-0213, to prepare the new location for the controller.

Scheduling Relocate the controller during a time other than regular working hours, or notify the users that computer service will be interrupted.

Begin by reading through these instructions completely. Then return to Step 1 and do the instructions, step by step.

CAUTION:
Do not connect or disconnect cables during periods of lightning activity. (For translations, of this safety notice, see Safety Notice 5 in *IBM 3174 Safety Notices*, GA27-3824.)

1

Ask the host operator to take the controller offline.

2

When the controller is offline, press the power switch to the **O** (off) position.

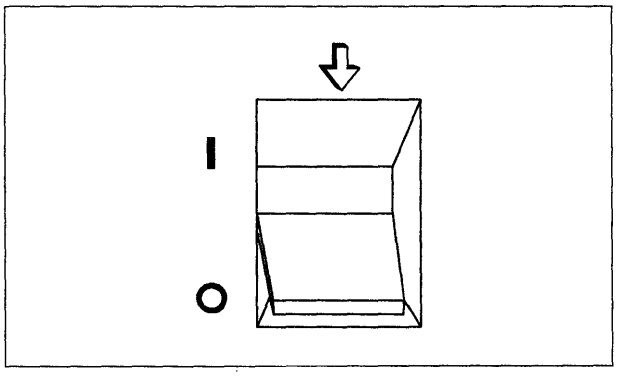

3

Unplug the power cable from the electric outlet.

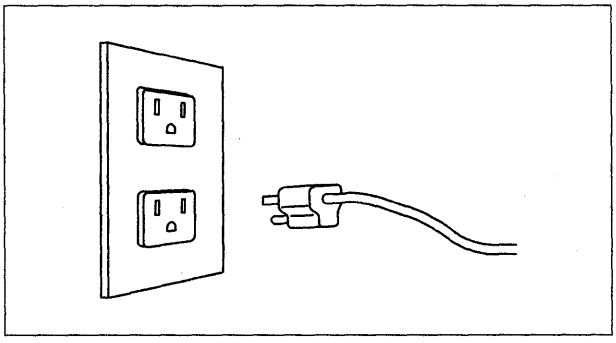

4

Disconnect the communication cable from the modem.

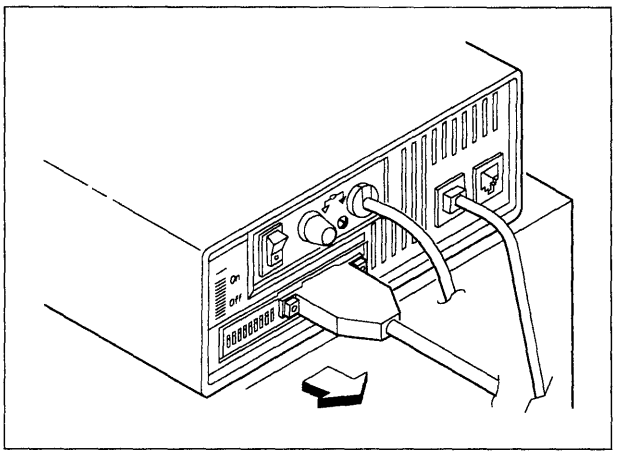

5

Label (if necessary) each terminal cable with its port number at the back of the controller.

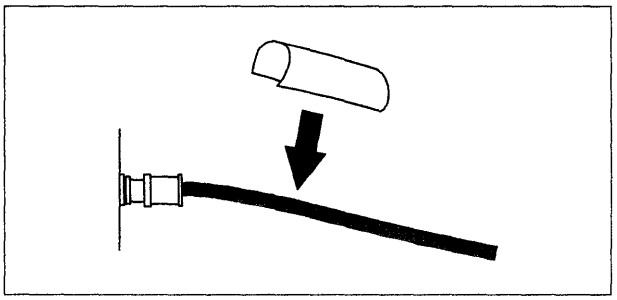

6

Disconnect all terminal cables from the controller by pressing in, turning the cable connectors counterclockwise, and carefully pulling them off.

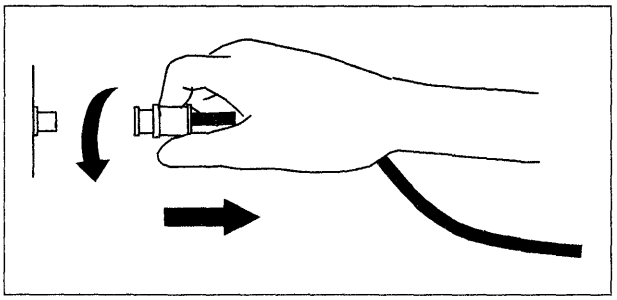

7

Open the drive lever and remove the Control diskette. Insert the Control diskette into its envelope and place it in the diskette storage pocket.

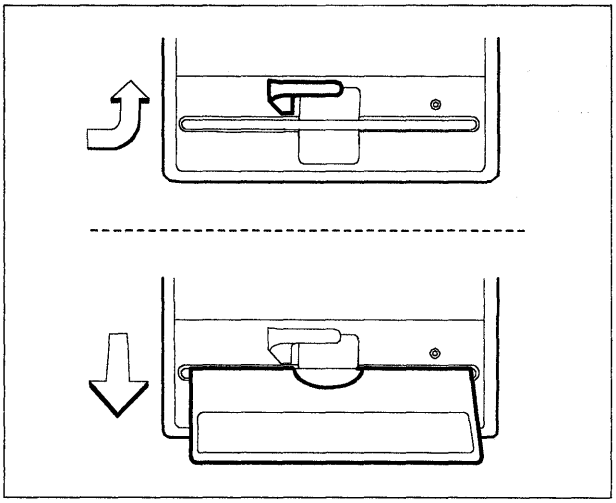

8

Put the cardboard shipping insert into the diskette drive and close the diskette drive lever.

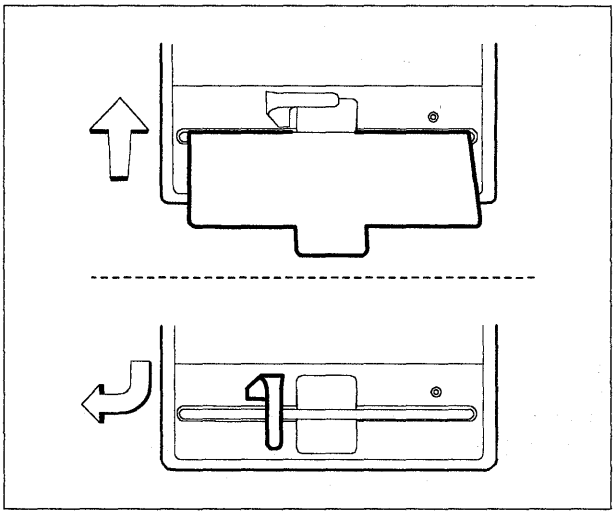

9

If it is necessary to pack the controller, follow the instructions that came with the packing materials and pack the controller for relocation. If you are not packing the controller, place the manuals and cables on top of the controller. Tape the cables to the controller.

Note: For the manuals and cables that were shipped with your controller, see "Items Shipped with the Controller" on page 2-2 and Figure 2-1 on page 2-2.

10

Move the controller to its new location.

11

Unpack the controller, if necessary.

12

Do the setup procedures in Chapter 2, "Setting Up the 3174 Controller."

Appendix A. Diskettes and Diskette Drives

Diskettes and Diskette Drives A-2
Operations with Diskettes A-2
Description of 3174 Diskettes A-3
Control Diskette A-3
Utility Diskette A-3
Limited Function Utility (LFU) Diskette A-3
Diskette Shipping and Receiving A-4
Long-Term Storage of Diskettes A-4

Diskettes and Diskette Drives

This appendix describes the different diskettes used with the 3174 controller and explains how to handle diskettes, and how to insert and remove them. In addition, this appendix provides information on diskette shipping, receiving, and long-term storage.

Operations with Diskettes

The control program microcode and utilities (described later in this appendix) are contained on a 1.2MB or 2.4MB diskette.

A common problem in using diskettes is to insert the wrong diskette for a particular operation. It does not take long to learn how to handle and care for your diskettes, but it does take concentration at all times to use the correct diskette and avert the obvious problems.

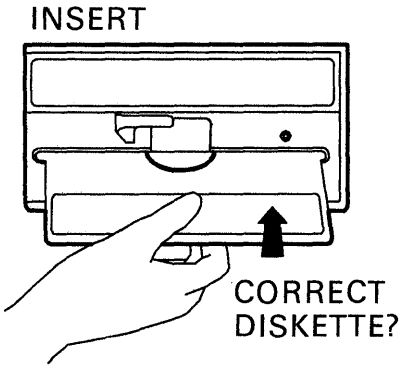

Description of 3174 Diskettes

A diskette (shown below) is a thin, flexible magnetic disk and a protective jacket, in which the disk is permanently enclosed.

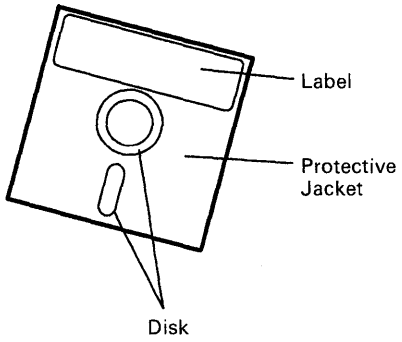

Warning: Do *not* try to remove the flexible magnetic disk from its protective jacket.

The function of the diskette is to store information that the 3174 Establishment Controller needs for operation. The types of diskettes used with the 3174 are described below.

Control Diskette

The Control diskette is used for the daily operation of the 3174. It contains operational microcode and configuration information that are unique to your organization. For example, the Control diskette contains information that describes all the terminals attached to the 3174.

Utility Diskette

The Utility diskette contains the microcode necessary to run various controller utilities, including customizing and offline tests (diagnostics).

Limited Function Utility (LFU) Diskette

This diskette contains the microcode that supports the following functions:

- Diagnostics
- Patch
- Copy Files
- Identify Customizing Keyboard.

Diskette Shipping and Receiving

Diskettes should always be shipped inside the original shipping container; an ordinary envelope does not provide enough protection. Label the package DO NOT EXPOSE TO EXCESSIVE HEAT (TEMPERATURES ABOVE 51.5° C OR 125° F) OR DIRECT SUNLIGHT.

On receiving diskettes, check for damage to the shipping container or to the diskettes. Save the shipping container for storing the diskettes for later shipment.

Long-Term Storage of Diskettes

Place diskettes in their envelopes, and store them in the following environment:

- Temperature: 10° to 51.5°C (50° to 125°F)
- Relative humidity: 8% to 80%.

Before using a diskette that has been exposed to temperatures outside the above environment range, allow the diskette to adjust to room temperature for 5 minutes. The diskette can be removed from its shipping container while adjusting to room temperature, but should be kept in its envelope.

Appendix B. Cable Accessories

3174 Cables, Plugs, and Accessories B-2

This appendix describes the different types of 3174 cables and cable accessories.

3174 Cables, Plugs, and Accessories

DPC-T3 Connector

This connector is found on the IBM 3270 DPC-T3 (DPC to Type 3 Direct Attachment Accessory Cable) and is used to connect 3174 controllers, 3299 Terminal Multiplexer Models 2 and 3, and new terminals directly to telephone wiring.

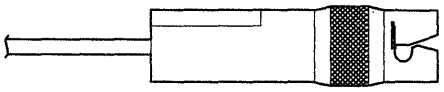

DPC Connector

This connector is found on the IBM Cabling System accessories. It is used to connect the 3174 controllers, 3299 Terminal Multiplexer Models 2 and 3, and terminals to the IBM Cabling System.

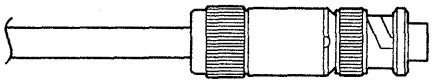

BNC Connector

This connector is found on coaxial wiring and the IBM/ROLM 3270 Coax-to-Twisted-Pair Adapter. It is used to connect controllers, terminal multiplexers, and terminals directly to coaxial cable. The IBM/ROLM 3270 Coax-to-Twisted-Pair Adapter allows you to connect controllers, terminal multiplexers, and terminals, normally connected to coaxial cable, to telephone wiring.

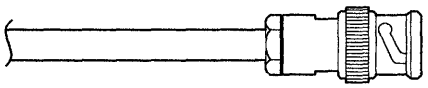

BNC Jack

The BNC jack accepts only the BNC connector. Note that the BNC jack is shorter than the DPC jack.

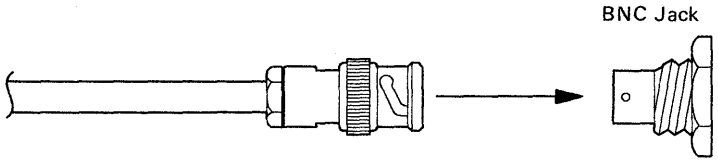

6-pin Modular Plug

This connector is found on telephone wiring, the IBM/ROLM Coax-to-Twisted-Pair Adapter, and the IBM DPC-T3 accessory. It is used to connect directly to telephone wiring and to the terminal connectors on the 3299 Terminal Multiplexer Model 3.

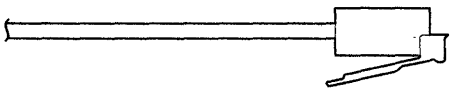

Connectivity

The DPC T3, DPC, and BNC connectors will all connect and lock on the DPC jacks found on the 3174 controllers, the 3299 Model 2, the 3299 Model 3 input jack, and most new terminals.

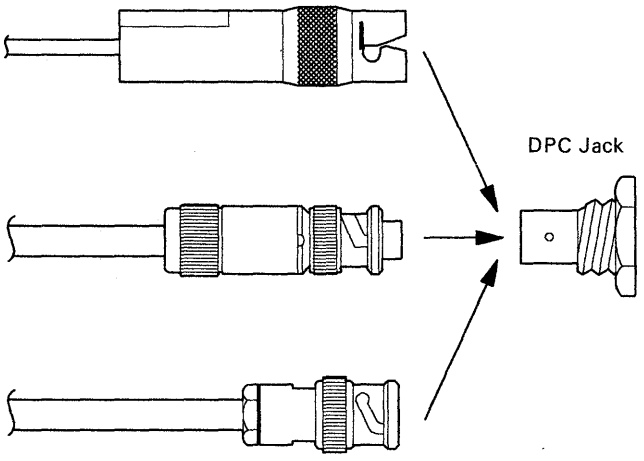

DPC to IBM Cabling System Accessory (8 foot) (P/N 6339073)

Consists of a DPC connector, 2.4 meters (8 feet) of IBM Cabling System media, and IBM Cabling System Data Connector.

Used for attaching 3174 controllers, 3299 Terminal Multiplexer Models 2 and 3, and new devices to the IBM Cabling System.

See *IBM Cabling System Catalog*, G570-2040.

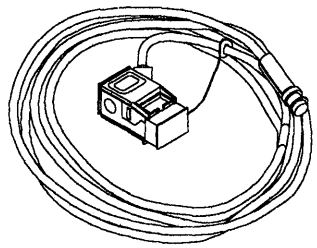

DPC to IBM Cabling System Accessory (30 foot) (P/N 6339074)

Consists of a DPC connector, 9 meters (30 feet) of IBM Cabling System media, and IBM Cabling System Data Connector.

Used for attaching 3174 controllers, 3299 Terminal Multiplexer Models 2 and 3, and new devices to the IBM Cabling System.

See *IBM Cabling System Catalog*, G570-2040.

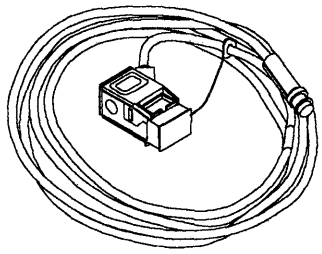

Double DPC-to-IBM Cabling System Accessory (8 foot)(P/N 6339075)

Consists of two cables terminating in one IBM Cabling System Data Connector. Each cable has a DPC connector and IBM Cabling System media, and terminates in one IBM Cabling System Data Connector.

Used for attaching 3174 controllers, 3299 Terminal Multiplexer Models 2 and 3, and new devices to the IBM Cabling System.

See *IBM Cabling System Catalog*, G570-2040.

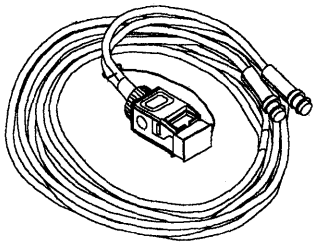

IBM Cabling System Single Coaxial Cableless Balun (P/N 6339082)

Consists of an adapter with one coaxial jack and one IBM Cabling System Data Connector without cabling between.

Used for attaching 3278-like (Category A) terminals to the IBM Cabling System.

Note: Functionally the same as part number 8642546 (red) without cabling.

See *IBM Cabling System Catalog*, G570-2040.

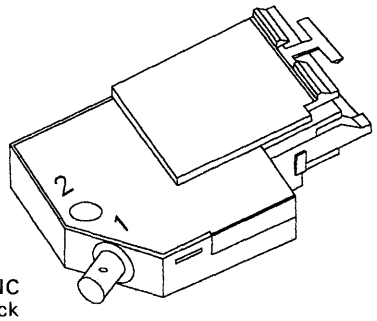

IBM Cabling System Double Coaxial Cableless Balun (P/N 6339083)

Consists of an adapter with two coaxial jacks and one IBM Cabling System Data Connector without cabling between.

Used for attaching 3278-like (Category A) terminals to the IBM Cabling System.

Note: Functionally the same as part number 8642546 (red) without cabling.

See *IBM Cabling System Catalog*, G570-2040.

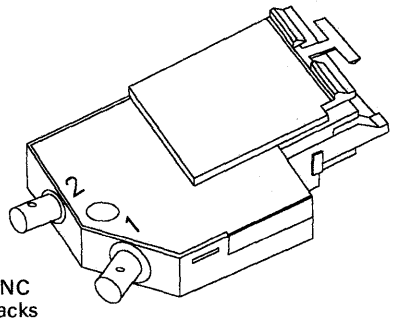

IBM Cabling System Coaxial Yellow Balun Assembly (P/N 8642544)

Consists of a BNC connector, a coaxial cable, a yellow balun, IBM Cabling System media, and IBM Cabling System Data Connector.

Used for attaching 3277-like (Category B) terminals to the IBM Cabling System.

See *IBM Cabling System Catalog*, G570-2040.

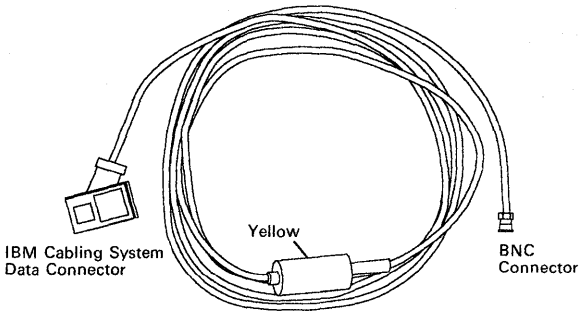

IBM Cabling System Coaxial Red Balun Assembly (P/N 8642546)

Consists of a BNC connector, a coaxial cable, a red balun, IBM Cabling System media, and IBM Cabling System Data Connector.

Used for attaching 3278-like (Category A) terminals to the IBM Cabling System.

See *IBM Cabling System Catalog*, G570-2040.

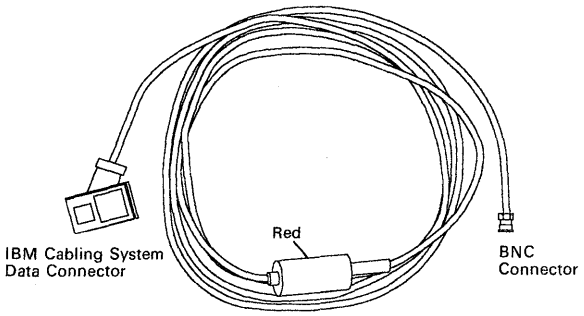

IBM/ROLM 3270 Coax-to-Twisted-Pair Adapter (P/N 61X4584)

Note: IBM Specified Type 3

Consists of a BNC connector, a coaxial cable, a balun, a telephone twisted-pair cable, and a 6-pin modular telephone plug.

Used for attaching devices with BNC jacks to telephone wiring.

See *IBM/ROLM 3270 Coax-to-Twisted-Pair Adapter Planning and Installation Guide*, GA27-3722.

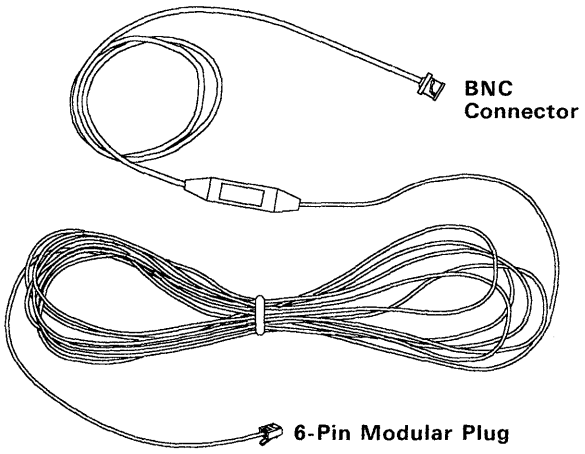

IBM 3270 DPC-T3 Direct Attachment Accessory Cable (P/N 83X9758)

Consists of a DPC-T3 connector, 4.5 meters (15 feet) of telephone twisted-pair cable, and a 6-pin modular telephone plug.

Used for attaching 3174 controllers, 3299 Terminal Multiplexer Models 2 and 3, and new devices to the telephone twisted-pair wiring.

See *IBM DPC-T3 Supplement to the 3174 Establishment Controller Site Planning*, G126-0215.

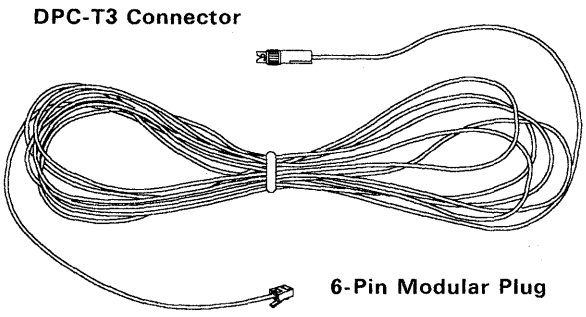

25-Pin D-Shell Connector with a Test/Operate Switch (P/N 6423153)

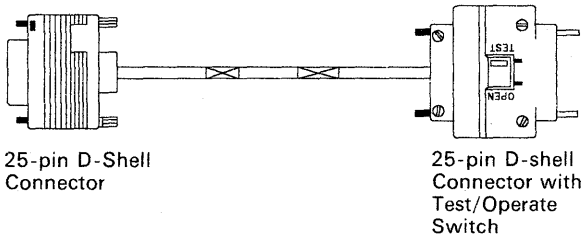

25-Pin D-Shell Connector with a Test/Operate Switch (P/N 6168155)

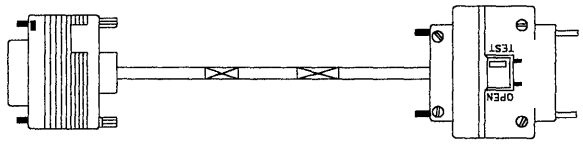

25-pin D-Shell Connector

25-pin D-shell Connector with Test/Operate Switch

IBM Cabling System Data Connector/25-Pin D-Shell Connector (P/N 6165837)

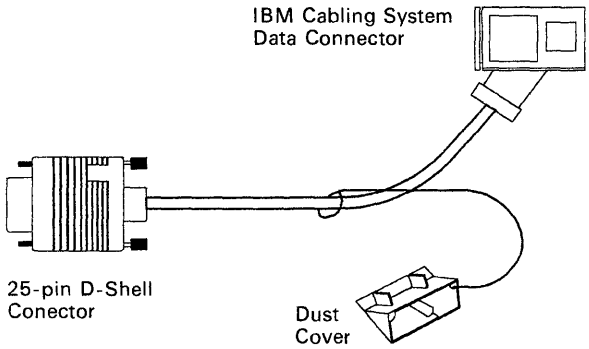

IBM Cabling System Data Connector

25-pin D-Shell Conector

Dust Cover

V.35 Wrap Plug (P/N 6423419)

Used for testing the Type 1 Communication Adapter and the following interface cables:

6423153 6423157 6423325 6423327
6423158 6423326 6423328

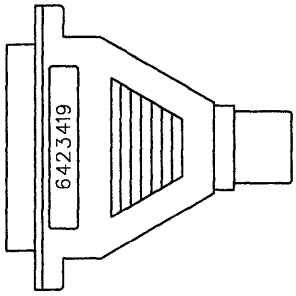

X.21 Wrap Plug (P/N 6423420)

Used for testing the Type 2 Communication Adapter.

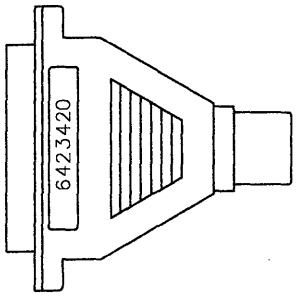

List of Abbreviations

A

AEA. Asynchronous Emulation Adapter.

Alt. Alternate.

ASCII. American National Standard Code for Information Interchange.

B

BNC. Bayonet connector.

BSC. Binary synchronous communication.

C

C. Celsius.

CCA. Concurrent Communication Adapter

CCITT. International Telegraph and Telephone Consultative Committee.

coax. Coaxial (cable).

comm. Communication.

D

DPC. Dual-purpose connector.

DSL. Downstream Load

E

EIA. Electronic Industries Association.

F

F. Fahrenheit.

I

IML. Initial microcode load.

M

Mb. Megabyte; 1 048 576 bytes.

modem. Modulator-demodulator.

R

RPQ. Request for price quotation.

S

SDLC. Synchronous Data Link Control.

SNA. Systems Network Architecture.

T

TA. Terminal adapter.

TMA. Terminal multiplexer adapter.

Glossary

This glossary includes terms and definitions from the *IBM Dictionary of Computing: Information Processing, Personal Computing, Telecommunications, Office Systems, IBM-specific Terms*, SC20-1699.

The terms in this glossary are defined here as they apply to the 3270 Information Display System.

A

access unit. In an IBM Token-Ring Network, a wiring concentrator.

adapter. (1) A general term for a device that provides some transitional function between two or more devices. (2) See also *attachment feature.*

address. (1) A value that identifies a register, a particular part of storage, a data source, or a data sink. The value is represented by one or more characters. (2) To refer to a device or an item of data by its address. (3) In word processing, the location, identified by an address code, of a specific section of the recording medium or storage. (4) The location in the storage of a computer where data is stored. (5) In data communication, the unique code assigned to each device or work station connected to a network.

AEA port. A communication connector on the Asynchronous Emulation Adapter (AEA).

alternate 1 initial microcode load (Alt 1 IML). The action of loading the utility microcode.

American National Standard Code for Information Interchange (ASCII). A standard code, using a coded character set consisting of 7-bit coded characters (8 bits including parity check), used for information interchange among data processing systems, data communication systems, and associated equipment. The ASCII set consists of control characters and graphic characters.

Asynchronous Emulation Adapter (AEA). In the 3174 Establishment Controller, an adapter that enables an ASCII terminal to communicate with a 3270 host using the 3270 data stream, an ASCII terminal to communicate with an ASCII host through the 3174, and a 3270 terminal to communicate with an ASCII host using the DEC VT100 data stream or the IBM 3101 data stream.

attach. To connect a device logically to a 3174 adapter, so that it can communicate over the network.

attachment feature. The circuitry by which a cable from a local terminal or a modem for a remote terminal is attached to a 3792 Auxiliary Control Unit or a 3791 Controller.

B

balun. A transformer for connecting balanced (for instance, twisted-pair) cables to unbalanced (for instance, coaxial) cable by matching the electrical characteristics of the cables.

binary synchronous communications (BSC). Data transmission in which character synchronism is controlled by timing signals generated at the sending and receiving stations.

C

card. In the 3174 Establishment Controller, a unit of electronic circuitry contained in a plastic casing (or cassette) and providing the control unit with a specialized function, for example, a Terminal Adapter or an Encrypt/Decrypt Adapter.

category A terminals. Terminals that can be attached to the 3174 Establishment Controller and to type A adapters in the 3274 Control Unit. For example, the 3278 and 3279 display stations, the 3287 Models 1, 1C, 2, and 2C, the 3262 Models 3 and 13, and the 3289 Models 1 and 2 printers.

channel-attached. Pertaining to attachment of devices directly by data channels (I/O channels) to a computer. Synonym for *local*.

coaxial cable. A cable consisting of one conductor, usually a small copper tube or wire, within and insulated from another conductor of larger diameter, usually copper tubing or copper braid.

command. An instruction that directs a controller or device to perform an operation or a set of operations.

communication adapter. (1) A circuit card with associated software that enables a processor, controller, or other device to be connected to a network. (2) See *EIA communication adapter*, *V.35 communication adapter*, and *X.21 communication adapter*.

communication management host. In ACF/TCAM, the host in a communication management configuration that performs all network-control functions in the network except control of locally attached stations of data hosts.

configuration. (1) The arrangement of a computer system or network as defined by the nature, number, and chief characteristics of its functional units. More specifically, the term *configuration* may refer to a hardware configuration or a software configuration. (2) See also *system configuration*.

connector. A means of establishing electrical flow.

Control diskette (CTL diskette). A customized diskette containing the microcode that describes a particular controller's attached terminals, and its method of attachment to the host.

control unit. (1) A device that controls input or output operations at one or more devices. (2) A general term for any device that provides common functions for other devices or mechanisms.

controller. A unit that controls input/output operations for one or more devices. The 3174 is an example of a controller.

customizing keyboard. A keyboard used to type in the customizing responses; this keyboard must be a Typewriter, Data Entry, APL (with APL off), or Text (with Text off) keyboard with a QWERTY layout. On a QWERTY layout, the first six characters on the left side of the top row of alphabetic characters are Q, W, E, R, T, Y.

D

data transfer. The movement, or copying, of data from one location and the storage of the data at another location.

device. A mechanical, electrical, or electronic contrivance with a specific purpose.

downstream load (DSL). The capability of a distributed function terminal to receive its control program from the control unit to which it is attached. A diskette containing the terminal's control program is loaded into the control unit.

E

EIA communication adapter. A communication adapter conforming to EIA standards that can combine and send information on two lines at speeds up to 19.2 kbps.

emulate. (1) To imitate one system with another, primarily by hardware, so that the imitating system accepts the same data, executes the same computer programs, and achieves the same results as the imitated computer system. (2) Contrast with *simulate*.

F

faceplate. A plate for connecting data and voice connectors to a cabling system. It may be wall-mounted or surface-mounted.

G

gateway. (1) A functional unit that connects two computer networks of different network architectures. (2) See also *bridge*.

Note: A gateway connects networks or systems of different architectures. A bridge interconnects networks or systems with the same or similar architectures.

H

host computer. (1) In a computer network, a computer that provides end users with services such as computation and data bases and that usually performs network control functions. (2) The primary or controlling computer in a multiple-computer installation. (3) A computer used to prepare programs for use on another computer or on another data processing system; for example, a computer used to compile link edit, or test programs to be used on another system. (4) Synonym for *host processor*.

host system. (1) A data processing system used to prepare programs and operating environments for use on another computer or controller. (2) The data processing system to which a network is connected and with which the system can communicate. (3) The controlling or highest-level system in a data communication configuration; for example, a System/38 is the host system for the work stations connected to it.

I

IBM Cabling System. A permanently installed wiring system that eliminates the need to rewire when terminals are moved from one location to another within an office complex. It allows transmission of data at very high speeds and is the foundation for installing a local area network.

initial microcode load (IML). The action of loading the operational microcode.

J

jack. A connecting device to which a wire or wires of a circuit may be attached and that is arranged for insertion of a plug.

L

link. The logical connection between nodes including the end-to-end link control procedures.

location. With reference to a 3174, a place within the 3174 chassis where a particular card or adapter is inserted.

M

microcode. (1) One or more microinstructions. (2) A code, representing the instructions of an instruction set, that is implemented in a part of storage that is not program-addressable. (3) To design, write, and also to test one or more microinstructions.

modem (modulator/demodulator). A device that converts digital data from a computer to an analog signal that can be transmitted on a telecommunication line, and converts the analog signal received to data for the computer.

multistation access unit. In the IBM Token-Ring Network, a wiring concentrator that can connect up to eight lobes to a ring.

N

network. (1) An arrangement of nodes and connecting branches. Connections are made between data stations. (2) A configuration of data processing devices and software connected for information interchange.

O

offline test. A diagnostic test or data collection program that must be run when the 3174 and its connected terminals are not in normal operation.

P

port. (1) An access point for data entry or exit. (2) A connector on a device to which cables for other devices such as display stations and printers are attached.

R

remote. Pertaining to a system, program, or device that is accessed through a telecommunication line. Contrast with *local*.

request for price quotation (RPQ). An alteration or addition to the functional capabilities that the control unit provides.

ring (network). A network configuration where a series of attaching devices are connected by unidirectional transmission links to form a closed path.

S

storage. (1) A unit into which recorded text can be entered, in which it can be retained and processed, and from which it can be retrieved. (2) See also memory.

subsystem. A secondary or subordinate system, or programming support, usually capable of operating independently of or asynchronously with a controlling system. The 3174 and its attached terminals are an example of a subsystem.

Synchronous Data Link Control (SDLC). A discipline conforming to subsets of the Advance Data Communication Control Procedures (ADCCP) of the American National Standards Institute (ANSI) and High-level Data Link Control (HDLC) of the International Organization for Standardization, for managing synchronous, code-transparent, serial-by-bit information transfer over a link connection. Transmission exchanges may be duplex or half-duplex over switched or nonswitched links. The configuration of the link connection may be point-to-point, multipoint, or loop. See also *binary synchronous communication (BSC)*.

system configuration. A process that specifies the devices and programs that form a particular data processing system.

Systems Network Architecture (SNA). The description of the logical structure, formats, protocols, and operational sequences for transmitting information units through, and controlling the configuration and operation of, networks.

T

terminal. In data communication, a display station or printer capable of sending or receiving information.

terminal adapter (TA). An adapter that provides control for a maximum of 32 terminals; each BNC connector (four in all) on the terminal adapter can control either one terminal that is directly attached or as many as eight terminals that are attached through a terminal multiplexer adapter (located in the 3174) or a 3299 Terminal Multiplexer (located outside the 3174).

terminal multiplexer. A device, such as the 3299 Terminal Multiplexer, for interleaving the signals for many devices onto a single coaxial cable.

terminal multiplexer adapter (TMA). This adapter is connected to the terminal adapter in the 3174 and provides control for a maximum of eight terminals.

terminal port. (1) In a network, the functional unit of a node through which data can enter or leave the network. (2) The part of a processor that is dedicated to a single data channel for the purpose of receiving data from or transferring data to one or more external or remote devices.

token. In a local area network, the symbol of authority passed among data stations to indicate the station temporarily in control of the transmission medium.

Note: A token is a particular message or bit pattern that signifies permission to transmit.

Token-Ring Network. (1) A ring network that allows unidirectional data transmission between data stations by a token-passing procedure over one transmission medium so that the transmitted data returns to the transmitting station. (2) A network that uses a ring topology, in which tokens are passed in a circuit from node to node. A node that is ready to send can capture the token and insert data for transmission.

Type. In the 3174 Establishment Controller, the identifying number of a card. For example, 9150 is the type number of the terminal adapter in the 3174.

Type-1 Communication Adapter. The 3174 adapter that supports communication between the 3174 (and its terminals) and a host over telecommunication links using any of these interfaces: (1) RS-232C/V.24 and V.35 for SNA/SDLC, (2) BSC, and (3) X.25. The user selects the appropriate interface.

Type-2 Communication Adapter. The 3174 adapter that supports communication between the 3174 (and its terminals) and a host over telecommunication links using either the X.21 interface for SNA/SDLC or the X.25 interface. The user selects the interface.

U

Utility diskette (UTL diskette). A diskette that contains the microcode necessary to run various customizing utilities, for example, to copy portions of a diskette for a backup diskette.

V

V.35 communication adapter. A communication adapter that can combine and send information on one line at speeds up to 64 kbps, and conforms to the CCITT V.35 standard.

W

wrap test. A test that checks attachment or control unit circuitry without checking the mechanism itself by returning the output of the mechanism as input. For example, when unrecoverable communication adapter or machine errors occur, a wrap test can transmit a specific character pattern to or through the modem in a loop and then compare the character pattern received with the pattern transmitted.

X

X.21. In data communication, a recommendation of the International Telegraph and Telephone Consultative Committee (CCITT) that defines the interface between data terminal equipment and public data networks for digital leases and circuit switched synchronous services.

X.21 communication adapter. A communication adapter that can combine and send information on one line at speeds up to 64 kbps, and that conforms to CCITT X.21 standards.

X.25. In data communication, a recommendation of the CCITT that defines the interface between data terminal equipment and packet switching networks.

Index

A

AC power indicator 1-9
accessories, cables, and plugs B-2
accessory cable, direct DPC-T3 attachment B-4
adapter connectors, terminal 3-3
adapters
  coax-to-twisted pair B-4
  communication 2-4, 5-11
  terminal multiplexer 1-3, 3-6
addresses
  See terminal port addresses
ADV (Advance)
  Advance pushbutton 1-8
  function 1-8
Alt 1
  adapter testing procedure 5-8
  IML 1-8
  pushbutton 1-8
  setting up 2-8
Alt 2
  IML 1-8
  pushbutton 1-8
  testing procedure, IML 5-6

B

balun
  coaxial red B-4
  coaxial yellow B-4
  single coaxial cableless B-3
BNC
  connector B-2
  jack B-2

C

cable
  cables, plugs, and accessories B-2
  connections 3-2
  connectors 3-2
  descriptions B-1
  direct DPC-T3 attachment accessory B-4
  figure, ports and cables 3-5
  host connection 3-3
  test, communication adapter and cable 5-11
  types attached 1-9
  worksheets 3-4
    6, TMA 1 cabling 3-6
    7, terminal direct-connect cabling 3-7
cableless coaxial balun, single B-3
cabling system 3-1
  figure, ports and cables 3-5
  host connection 3-3
cabling system *(continued)*
  modular plugs 3-2
  terminal adapter connectors 3-3
  terminal cable connectors 3-2
  worksheets 3-4
    6, TMA 1 cabling 3-6
    7, terminal direct-connect cabling 3-7
CAUTION notices, customer setup of unit 2-5
check condition indicator 1-7
coax-to-twisted pair adapter B-4
coaxial
  cableless balun, single B-3
  red balun B-4
  yellow balun B-4
codes, status
  Adv (Advance) pushbutton 1-8
  manual viii
  reference to 1-4
communication adapter and cable
  set up 2-4
  test 5-11
Communication Adapter (EIA/V.35), Type 1
  See Type 1 Communication Adapter (EIA/V.35)
Communication Adapter (X.21), Type 2
  See Type 2 Communication Adapter (X.21)
condition indicator, check 1-7
connecting cables 3-2
connection 3-2, B-1
  modem 1-9, 3-3
  sample configuration 3-5
connectivity B-2
connectors 3-2
  BNC B-2
  DPC B-2
  DPC-T3 B-2
  modular plugs 3-2
  terminal cable 3-2
  types attached 1-9
  25-pin D-shell B-4
Control diskette 4-2, A-3
  See also diskettes
control program microcode 1-4
controller
  See also 3174
  interfaces 1-3
  models and features, 3174 1-2
  operation verification, set up 2-1
  relocating 6-2
Customer Problem Determination Guide
  See Problem Determination Guide, Customer
customer setup instructions
  See setting up controller
customizing 1-4
  customizing utilities 1-4

customizing *(continued)*
utilities 1-4

D

D-shell connector B-4
D-shell data connector/25-pin B-5
data connector/25-pin D-shell B-5
data transfer indicator 1-7
descriptions, 3174 model 1-3
description, 3174 Establishment Controller
See general description, 3174 Establishment Controller
diagnostics 1-4, 1-8
See also problem solving
direct DPC-T3 attachment accessory cable B-4
direct-connect worksheet 7, terminal 3-7
directly connected address 3-4
diskettes
Control 4-2, A-3
description of A-3
drive A-2
introduction to A-2
limited function utility A-3
operations with 1-4, A-2
shipping A-4
storage of A-4
Utility 1-8, 2-7, A-3
display stations
See terminal
double DPC-to-IBM cabling B-3
DPC connector B-2
DPC-to-IBM cabling B-3
DPC-T3 connector B-2
DPC-T3 direct attachment accessory cable B-4
drive, diskette
See diskettes

E

EIA V.35
See Type 1 Communication Adapter (EIA/V.35)
enter pushbutton 1-8
establishment controller models, 3174 1-2

F

free function 5-6
front view 1-6

G

general controller test 5-6
See also Alt 2
general description, 3174 Establishment Controller
interfaces 1-3
making operational 4-2
models and features 1-2
overview, 3174 1-3
general description, 3174 Establishment Controller *(continued)*
relocating controller 6-2
sample configuration diagram 3-5
3174 diskettes A-3

H

host connection cable 3-3

I

IBM/ROLM 3270 coax-to-twisted pair adapter B-4
IML
adapter testing procedure, Alt 1 5-8
Alt 1 1-8
Alt 2 1-8
Model 81R and 82R, how to 4-3
with power off 4-4
with power on 4-3
normal 4-2
procedure 4-2
pushbutton 1-7
re-IML 4-2
sequence for 1-7
testing procedure, Alt 2 5-6
indicators 1-6, 1-7
AC power 1-9
check condition 1-7
data transfer 1-7
status 1-7
indirectly connected address 3-4
initial microcode load
See IML
installation 2-1
See also setting up controller
instructions, relocation 6-2
instructions, set up
See setting up controller
interfaces 1-3
items shipped 2-1

J

jack
BNC B-2
DPC B-2

L

limited function utility (LFU) diskette A-3

M

maintenance information manual viii
manuals, 3174
Maintenance Information manual viii
Planning Guide viii
Problem Determination Guide, Customer viii

manuals, 3174 *(continued)*
Status Codes manual viii
Utilities Guide viii
master menu 1-8
microcode
control program 1-4
model descriptions, 3174 1-3
Model 81R and 82R 4-4
IML 4-3
with power off 4-4
with power on 4-3
modem 1-9, 3-3
modular plugs 3-2
modular plug, 6-pin B-2
moving, instructions for
See relocating controller

N

NetView Distribution Manager 4-2
remote IML 4-2
normal IML 4-2

O

offline mode
problem solving 5-1
tests 5-6
online, 3174 placing 4-2
operations
making the 3174 operational 4-2
with diskettes 1-4, A-2
operator panel 1-7

P

panels 1-6
front 1-6
rear 1-6, 1-9
panel, operator 1-7
plug
V.35 wrap B-5
X.21 wrap B-5
6-pin modular B-2
plug connectors, modular 3-2
plugs, cables, and accessories B-2
port addresses
See terminal port addresses
power
AC indicator 1-9
on/off 1-7
printers
See terminal
problem determination
See problem solving
Problem Determination Guide, Customer viii, 1-4
problem solving 1-5, 5-1
See also diagnostics
problem solving *(continued)*
Alt 1 adapter testing procedure 5-8
Alt 2 IML 1-8
Alt 2 IML testing procedure 5-6
free function 5-6
offline tests 5-6
publications
See manuals, 3174
pushbutton
Advance 1-8
Alt 1 1-8
Alt 2 1-8
enter 1-8
IML 1-7

R

re-IML 4-2
rear panel 1-9
rear view 1-6
red coaxial balun B-4
relocating controller 6-2
instructions 6-2
packing 6-2
scheduling 6-2
site preparation 6-2
remote IML 4-2

S

setting up controller
cable and connector types 1-9
CAUTION notices 2-5
instructions 2-1
list of shipped items 2-1
relocating controller 6-2
steps in sequence 2-4
Utility diskette 2-7
shipping diskettes A-4
single coaxial cableless balun B-3
site planning
relocation 6-2
site preparation
See site planning
status codes
Adv (Advance) pushbutton 1-8
manual viii
reference to 1-4
status indicator 1-7
storage devices and media
diskettes 4-2
Control 4-2, A-3
description of A-3
limited function utility A-3
operations with A-2
shipping A-4
storage of A-4
Utility A-3

switches 1-6
power 1-7
test/oper 2-6

T

terminal
definition 1-3
terminal adapter connectors 3-3
terminal cable connectors 3-2
terminal direct-connect worksheet 7 3-7
Terminal Multiplexer Adapter
attachment of terminals via 1-3
cabling worksheet 6 3-6
terminal port addresses 3-4
directly connected 3-4
indirectly connected 3-4
tests
Alt 1 adapter 5-8
Alt 2 IML 5-6
communication adapter and cable test 5-11
offline 1-4, 5-6
online 1-4
test/oper switch 2-6
TMA
See Terminal Multiplexer Adapter
transfer indicator, data 1-7
troubleshooting
See problem solving
turning controller on or off 1-7
Type 1 Communication Adapter (EIA/V.35)
wrap plug B-5
Type 2 Communication Adapter (X.21)
wrap plug B-5

U

utilities
customizing 1-4
guide viii
Utility diskette 1-8, 2-7, A-3
See also diskettes

V

views, panels 1-6
V.35
See Type 1 Communication Adapter (EIA/V.35)

W

worksheets 3-4
samples 3-5
6, TMA 1 cabling 3-6
7, terminal direct-connect cabling 3-7
wrap plug
V.35 B-5
X.21 B-5

X

X.21
See Type 2 Communication Adapter (X.21)
X.25
See Type 1 Communication Adapter (EIA/V.35)

Y

yellow coaxial balun B-4

Numerics

25-pin D-shell connector B-4
3174
See also general description, 3174 Establishment Controller
See also setting up controller
establishment controller models 1-2
features 1-2
interfaces 1-3
Maintenance Information manual viii
making operational 4-2
model descriptions 1-3
online, placing 4-2
panels, switches and indicators 1-6
Planning Guide viii
Problem Determination Guide, Customer viii
problem solving 5-1
relocating 6-2
setting up 2-1
Status Codes manual viii
Utilities Guide viii
3270
coax-to-twisted pair adapter B-4
DPC-T3 direct attachment accessory cable B-4
3299 Terminal Multiplexer Adapter
attachment of terminals via 1-3
cabling worksheet 6 3-6
6-pin modular plug B-2

IBM 3174 Establishment Controller
Models 81R, 82R, 91R, and 92R
User's Guide

READER'S COMMENT FORM

Publication No. GA23-0313-3

This manual is part of a library that serves as a reference source for systems analysts, programmers, and operators of IBM systems. You may use this form to communicate your comments about this publication, its organization, or subject matter, with the understanding that IBM may use or distribute whatever information you supply in any way it believes appropriate without incurring any obligation to you.

Note: Copies of IBM publications are not stocked at the location to which this form is addressed. Please direct any requests for copies of publications, or for assistance in using your IBM system, to your IBM representative or to the IBM branch office serving your locality.

Possible topics for comment are:

Clarity Accuracy Completeness Organization Coding Retrieval Legibility

If you wish a reply, give your name, company, mailing address, date, and location of your local IBM branch office:

_____

_____

_____

_____

_____

What is your occupation? _____

Number of latest Newsletter associated with this publication: _____

Thank you for your cooperation. No postage stamp necessary if mailed in the U.S.A. (Elsewhere, an IBM office or representative will be happy to forward your comments or you may mail directly to the address in the Edition Notice on the back of the title page.)

Reader's Comment Form

Fold and tape | Please Do Not Staple | Fold and tape

NO POSTAGE
NECESSARY
IF MAILED
IN THE
UNITED STATES

BUSINESS REPLY MAIL

FIRST CLASS PERMIT NO. 40 ARMONK, N.Y.

POSTAGE WILL BE PAID BY ADDRESSEE

International Business Machines Corporation
Dept. E02
P.O. Box 12195
Research Triangle Park, N.C. 27709-9990

Fold and tape | Please Do Not Staple | Fold and tape

IBM®

Part Number
25F7647

File Number
36/38/370/4300/8100/3174-09

GA23-0313-03

Printed in U.S.A.