HEWLETT PACKARD

HP 12016A SCSI Host Bus Adapter Card

Installation and Reference Manual

FEDERAL COMMUNICATIONS COMMISSION RADIO FREQUENCY INTERFERENCE STATEMENT

WARNING: This equipment generates, uses, and can radiate radio frequency energy and if not installed and used in accordance with the instruction manual, may cause interference to radio communications. It has been tested and found to comply with the limits for Class A computing devices pursuant to Support J of Part 15 of FCC Rules, which are designed to provide reasonable protection against such interference. Operation of this equipment in a residential area is likely to cause interference in which case the user at his own expense will be required to take whatever measures may be required to correct the interference.

Data Systems Operation
11000 Wolfe Road
Cupertino, CA 95014

Manual Part No. 12016-90001
E0191

Printed in U.S.A. February 1991

NOTICE

The information contained in this document is subject to change without notice.

HEWLETT-PACKARD MAKES NO WARRANTY OF ANY KIND WITH REGARD TO THE MATERIAL, INCLUDING, BUT NOT LIMITED TO, THE IMPLIED WARRANTIES OF MERCHANTABILITY AND FITNESS FOR A PARTICULAR PURPOSE. Hewlett-Packard shall not be liable for errors contained herein or for incidental or consequential damages in connection with the furnishing, performance, or use of this material.

Hewlett-Packard assumes no responsibility for the use or reliability of its software on equipment that is not furnished by Hewlett-Packard.

This document contains proprietary information which is protected by copyright. All rights are reserved. No part of this document may be photocopied, reproduced, or translated to another language without the prior written consent of Hewlett-Packard Company.

RESTRICTED RIGHTS LEGEND

Use, duplication, or disclosure by the Government is subject to restrictions as set forth in subparagraph (c) (1) (ii) of the Rights in Technical Data and Computer Software clause at DFARs 252.227.7013

Copyright © 1990 by HEWLETT-PACKARD COMPANY

Printing History

The Printing History below identifies the edition of this manual and any updates that are included. Periodically, update packages are distributed which contain replacement pages to be merged into the manual, including an updated copy of this printing history page.

Each reprinting of this manual will incorporate all past updates; however, no new information will be added. Thus, the reprinted copy will be identical in content to prior printings of the same edition with its user-inserted update information. New editions of this manual will contain new information, as well as all updates.

To determine which manual edition and update is compatible with your current software revision code, refer to the Manual Numbering File or the Computer User's Documentation Index. (The Manual Numbering File is included with your software. It consists of an "M" followed by a five digit product number.)

First Edition	Jul 1990	
Update 1	Aug 1990	Manual reprinted to include Update 1
Update 2	Sep 1990	
Second Edition	Feb 1991	

Safety Considerations

GENERAL - This product and related documentation must be reviewed for familiarization with safety markings and instructions before operation.

SAFETY SYMBOLS

Instruction manual symbol: the product will be marked with this symbol when it is necessary for the user to refer to the instruction manual in order to protect the product against damage.

Indicates hazardous voltages.

Indicates earth (ground) terminal (sometimes used in manual to indicate circuit common connected to grounded chassis).

CAUTION

The CAUTION sign denotes a hazard. It calls attention to an operating procedure, practice, or the like, which, if not correctly performed or adhered to, could result in damage to or destruction of part or all of the product. Do not proceed beyond a CAUTION sign until the indicated conditions are fully understood and met.

Example of Caution

CAUTION

STATIC SENSITIVE DEVICES - Some of the semiconductor devices used in this equipment are susceptible to damage by static discharge. Depending on the magnitude of the charge, device substrates can be punctured or destroyed by contact or mere proximity to a static charge. These charges are generated in numerous ways such as simple contact, separation of materials, and normal motions of persons working with static sensitive devices.

When handling or servicing equipment containing static sensitive devices, adequate precautions must be taken to prevent device damage or destruction. Only those who are thoroughly familiar with industry accepted techniques for handling static sensitive devices should attempt to service the cards with these devices. In all instances, measures must be taken to prevent static charge buildup on work surfaces and persons handling the devices. Cautions are included through this manual where handling and maintenance involve static sensitive devices.

WARNING

The WARNING sign denotes a hazard. It calls attention to a procedure, practice, or the like, which, if not correctly performed or adhered to, could result in injury. Do not proceed beyond a WARNING sign until the indicated conditions are fully understood and met.

Example of Warning

WARNING

SERVICING - **Any servicing, adjustment, maintenance, or repair of this product must be performed only by qualified personnel.**

Adjustments described in this manual may be performed with power supplied to the product while protective covers are removed. Energy available at many points may, if contacted, result in personal injury.

Capacitors inside this product may still be charged even when disconnected from its power source.

To avoid a fire hazard, only fuses with the required current rating and of the specified type (normal blow, time delay, etc.) are to be used for replacement.

Example of Warning

WARNING

EYE HAZARD - **Eye protection must be worn when removing or inserting integrated circuits held in place with retaining clips.**

Preface

The SCSI Card Installation and Reference Manual describes how to install the SCSI hardware and software, and how to use the product. It also provides information to help you write your own device drivers. Consequently, the RTE–A Driver Reference Manual, part number 92077–90011, and the RTE–A System Generation and Installation Manual, part number 92077–90034, do not contain SCSI card driver information.

Similarly, the HP 24612A diagnostic manuals do not contain any information that applies only to the SCSI Card diagnostic. The documentation strategy of putting all of the required product information in one manual is new and we hope that you find it a definite improvement. Please use the Reader Comment sheet at the front of this manual to send us your opinion and your comments.

Please read the README file on the software media that comes with the product for information about software revisions and software media part numbers, and for descriptions of additional software.

Throughout the manual, the term SCSI Card is used for the term Hewlett–Packard 12016A Small Computer Systems Interface Host Bus Adapter Card.

Table of Contents

Chapter 1
General SCSI Information

SCSI Card Overview 1-1
- Connection to Peripherals 1-1
- Software 1-2

Equipment Checklist 1-2
Tested Peripheral Devices 1-4
Supported Drivers 1-4
Related Manuals 1-4
Specifications 1-5
- Physical Specifications 1-5
- Electrical 1-5
- Maximum Bus Data Rate 1-5
- Environmental Specifications 1-6
- Temperature 1-6
- Altitude 1-6
- Regulatory Approvals 1-6

Chapter 2
Hardware Installation

Pre-Installation Tasks 2-1
- Unpacking and Inspecting the SCSI Card 2-1
- Reshipping Instructions 2-2

Installation Procedures 2-2
- Required Tools 2-2
- Power Budgeting 2-2
- SCSI Card Layout 2-2
- Switch Settings 2-5
  - Setting Switch SW1 2-5
  - Setting Switch SW2 2-6
- SCSI Card On-Board Fuse 2-7
- Card Installation 2-7
- Cable Installation 2-8

Verification of Correct Installation 2-9
SCSI Self-Test 2-9
Card Removal 2-11

Chapter 3
Software Installation

Copying the Software 3-2
Create a New Answer File 3-3
System Generation 3-5
Copy System and Snap Files to the /SYSTEM Directory 3-5
Create New Boot Command and Welcome Files 3-5
Reboot the System 3-6
Finalizing the Software Installation 3-6

Chapter 4
Troubleshooting

Troubleshooting 4-1
SCSI Self-Test 4-1
Online Verification Program 4-3
- VSCSI Usage Help 4-3
- Interactive Interface 4-4
- Non-Interactive Interface 4-9
- VSCSI Program Error and Information Messages 4-13
  - Error Messages During SCSI LU Validation 4-13
  - Command Parsing Errors 4-15
  - Runstring Parsing Errors 4-15
  - SCSI LU Table Access Errors 4-15
  - Self-Test Messages and Errors 4-16
  - FMP Test Errors 4-16
  - RAMTEST and LOOPBACK Test Errors 4-17
  - Firmware Timestamp Errors 4-17
  - Driver Errors 4-18
  - Other Errors 4-19

Chapter 5
Programming Reference Material

Card Communication Overview 5-1
Digital Audio Tape (DAT) Device Driver DDQ24 5-2
- DDQ24 Driver Read, Write and Control Calling Sequences 5-2
- Calling Sequence Parameters 5-2
- Control Commands 5-4
- Status 5-10
  - Logical Unit Status (DVT Word 6) 5-10
  - Driver Error (DVT Word 16) 5-11
  - DVT Word 17 5-12
  - Extended Transaction Status (DVT Word 18) 5-12
  - Sense Code and Additional Sense Code (DVT Word 19) 5-12
  - DDQ24 Driver Communication Word (DVT Word 20) 5-13

Chapter 5 (continued)

Disk Device Driver DDQ30 5-13
DDQ30 Read and Write Calls 5-13
Z Buffer Calls 5-15
Driver Parameter Table Use in DDQ30 5-15
DDQ30 Driver Communication Word (DVT Word 20) 5-16
Interface Driver IDQ35 5-16

Appendix A
Error Messages

Tape Device Driver (DDQ24) Errors A-1
Driver Error (DVT Word 16) A-1
DVT Word 17 ..... A-2
Extended Transaction Status (DVT Word 18) A-2
Disk Device Driver (DDQ30) Errors A-3
Interface Driver (IDQ35) Errors A-4
Optical Disk Drive Errors A-5
Sense Keys A-6
Additional Sense Code A-6
Digital Audio Tape Drive Errors A-11

Appendix B
Single-Ended Cable Pin to Signal List

Single-Ended Cable B-1
Terminator Power B-1

Appendix C
Differential Cable Pin to Signal List

Differential Cable C-1
Terminator Power C-1

Appendix D
Card Connector P3 Pin to Signal List

List of Illustrations

Figure 2-1. SCSI Card Typical Installation 2-3
Figure 2-2. SCSI Card Layout 2-4
Figure 2-3. SW1 Settings 2-6
Figure 2-4. SW2 Settings 2-6
Figure 5-1. SCSI Card Communications Overview 5-1
Figure B-1. Single-Ended Cable Pin to Signal List B-2
Figure C–1. Differential Cable Pin to Signal List C-2

Tables

Table 1-1. Supported SCSI Drivers 1-4
Table 2-5. LED Self-Test Status 2-10
Table 4-1. LED Self-Test Status 4-2
Table D-1. Connector P3 Pin to Signal List D-1

Glossary

Index

1

General SCSI Information

This chapter introduces the HP 12016A Small Computer System Interface Host Bus Adapter Card (SCSI Card) and contains the following information:

- An overview of the SCSI Card.
- A list of the equipment provided with the card.
- Tested products.
- Manuals and guides related to the host system (the HP 1000).
- Product specifications.

The README file on the software media that comes with the SCSI product contains information about software revisions and software media part numbers, and descriptions of additional software.

SCSI Card Overview

The HP SCSI Card connects SCSI or SCSI-II compatible peripheral controllers to an HP 1000 A-Series computer. You can connect up to seven controllers for disk drives, magnetic tape drives, printers and other peripherals to the SCSI Card. The SCSI Card supports both single-ended and differential SCSI bus configurations.

The RTE-A Operating System controls concurrent SCSI peripheral transactions on multiple buses while maintaining compatibility with non-HP peripherals. Testing has not been performed on all possible SCSI peripherals and software device drivers; however, many peripherals and device drivers that conform to the current state of the SCSI specifications are compatible with the SCSI Card.

Connection to Peripherals

The standard 12016A card comes with a single-ended two-meter cable that connects the SCSI interface card to the SCSI bus. The A-Series end of the cable connects to the card (connector P3) with an 80-pin female printed circuit edge connector; the other end of the cable connects to a 50-pin D-type connector on the SCSI bus.

Some SCSI devices require a differential bus, which 12016A option 001 supplies. The single-ended cable does not come with this option. Option 001 includes a cable that connects to differential devices and uses a 50-pin D-type connector.

You cannot mix single-ended and differential devices on the same SCSI interface. If you want to connect both single-ended and differential devices, you need two SCSI Cards.

Appendixes B, C, and D describe the pin-to-signal designations for the single-ended cable, differential cable, and card connector P3, respectively.

Software

The SCSI Card and software are compatible with HP 1000 A-Series Computers operating under the RTE-A Operating System (revision 5010 or later).

Three drivers come with the HP SCSI Card. The interface driver, IDQ35, couples the SCSI Card to the RTE-A Operating System. The disk device driver, DDQ30, generates the device-dependent commands required to support HP disks. A generation record file, DDQ30_GEN, provides the default generation records for products supported by the DDQ30 device driver. The tape device driver, DDQ24, generates tape device commands and DDQ24_GEN provides the default generation records for products the DDQ24 driver supports. You must install at least one device driver in order for the interface to communicate with the devices.

NOTE

All Optical Disks must be formatted prior to use on an HP 1000 computer. You can use the online verification program, VSCSI to format disks, as described in Chapter Four.

You can write your own special device drivers to connect the devices. This manual and the disk device driver source code file DDQ30.MAC contain the information necessary to write your own device drivers. In addition, you can contract with Hewlett-Packard to obtain any necessary consulting to write device drivers. However, Hewlett-Packard assumes no responsibility for user-written device drivers.

Equipment Checklist

There are two 12016A SCSI Card configurations, one for standard (single-ended) devices and one for differential devices. You cannot mix single-ended and differential devices on one SCSI interface card. The standard HP 12016A SCSI Card product comes with the following hardware:

- SCSI Interface Card, part number 12016-60001.
- SCSI Interface Cable, part number 12016-60002.
- Cable Terminator, part number 1252-3251.
- Fuse, part number 2110-0517, 2 amps, 125 volts. This extra fuse is provided in case the on-board fuse opens.
- *HP 12016A SCSI Host Bus Adapter Card Installation and Reference Manual*, part number 12016-90001.

The HP 12016A SCSI Interface product, option 001 (for differential target devices), comes with the following hardware:

- SCSI Interface Card, part number 12016-60001.
- SCSI Interface Differential Cable, part number 12016-60003.
- Differential Cable Terminator, part number 12016-80003.
- Fuse, part number 2110-0517, 2 amps, 125 volts. This extra fuse is provided in case the on-board fuse opens.
- *HP 12016A SCSI Host Bus Adapter Card Installation and Reference Manual*, part number 12016-90001.

You can order four different types of additional connecting cables with the SCSI product. Connecting cables HP 92222A (.5 meters / 1.6 feet), HP 92222B (1 meter / 3.3 feet) and HP 92222C (2 meters / 6.6 feet) connect SCSI peripheral devices together. These three cables connect (daisy chain) one SCSI device to another SCSI device; they do not connect the SCSI interface cable to a device.

The fourth type of cable you can order is a one meter (3.3 feet) extender cable, part number 92222D. This cable connects to the SCSI cable itself to extend its length. Cable HP 92222D does not interconnect SCSI devices, it only extends the length of the SCSI interface cable.

The SCSI Card has three peripheral media options. Each media option includes an Interface Driver (IDQ35), supported device drivers and an online verification program (VSCSI).

Three software media options are available with the SCSI Card (for more information, please read the README file on the software media):

Option	Description
#022	CS/80 Cartridge Tape
#051	1600 BPI Magnetic Tape
#044	3.5" Microfloppy Disks

You can order the SCSI Card without the Installation and Reference manual (option 100). However, you cannot delete the manual from product orders that include a software media option.

All of the HP SCSI peripheral media software options contain the following drivers and verification program:

- IDQ35.REL, SCSI Interface Driver IDQ35 (Relocatable).
- DDQ30.REL, Disk Device Driver (Relocatable).
- DDQ30.MAC, Disk Device Driver (Source Code).
- DDQ30_GEN.REL, Disk Generation Records (Relocatable).
- DDQ30_GEN.MAC, Disk Generation Records (Source)
- DDQ24.REL, Tape Device Driver (Relocatable)

- DDQ24_GEN.REL, Tape Generation Records (Relocatable)
- VSCSI.REL, Online Verification Program (Relocatable).
- VSCSILIB.REL, MACRO/1000 support routine
- ZRAMTST.HEX, downloaded Z180 RAM test
- ZLPBK.HEX, downloaded Z180 Loop Back test
- SCSI.SNF, SCSI software numbering file.
- README, a file that contains a description of additional software provided with the SCSI product, and information about software media part numbers and software revisions. The software is from RTE-A and other subsystems that complement the SCSI device. Read this file for more information.

The Disk Device Driver source code and relocatable are included to provide an example of a SCSI device driver to help you write your own driver(s).

Tested Peripheral Devices

HP Series 6300 Model 650/A Rewritable Optical Disk Drive, C1701A (single-ended only).
HP Series 6000 Model 660S Hard Disk, with options for DAT and rewritable optical disk.
HP Series 6000 Model 330S Hard Disk, with options for DAT and rewritable optical disk.
HP Series 6400 Model 1300/S Digital Audio Tape Drive.

Supported Drivers

Table 1-1 lists the SCSI drivers and the devices they support.

Table 1-1. Supported SCSI Drivers

Peripheral Device	Interface Driver	Device Driver
Rewritable Optical Disk	IDQ35	DDQ30
Hard Disk	IDQ35	DDQ30
Digital Audio Tape (DAT)	IDQ35	DDQ24

Related Manuals

The following technical documents associated with the HP 1000 computer are available from Hewlett-Packard.

RTE-A System Generation and Installation Manual, part number 92077-90034.

HP 1000 A-Series Computer I/O Interfacing Guide, part number 02103-90005.

RTE-A Programmer's Reference Manual, part number 92077-90007.

RTE-A Driver Reference Manual, part number 92077-90011.

RTE-A Driver Designer's Manual, part number 92077-90019.

Computer reference manual for your HP 1000 computer.

Schematics, parts lists, and serviceable parts lists are not provided in this manual because the HP SCSI Card is a Field Replaceable Unit (FRU).

Specifications

This section describes the physical and environmental specifications for the SCSI Card. This section also contains a list of national and international regulatory approvals.

Physical Specifications

Dimensions:

Length:	28.9 cm (11.38 inches)
Width:	17.2 cm (6.75 inches)
Weight:	720 gm (25.3 ounces)

Standards:

Conforms to Hewlett-Packard's implementation of HP SCSI.

Electrical

Power Requirements:

1.0A at 5.1V, 5.1 Watts (includes TERMPOWER)
15ma at +12V, 0.18 Watts
15ma at -12V, 0.18 Watts

Power Source:

This product generates termination power. It is designed to supply the power to the termination network at each end of the cable. The termination network at the computer end is integrated onto the card. The power available to the user is greater than 4.5 volts at up to .5 amps.

Maximum Bus Data Rate

2.56 megabytes per second

Environmental Specifications

The HP SCSI Card meets or exceeds the specifications of its HP 1000 host. Refer to the installation and service manual for your computer.

Temperature

Operating	0 to 55 degrees C
Storage	–40 to 75 degrees C
Relative Humidity	5% to 95% noncondensing

Altitude

Operating	To 4.6 km (14,088 ft)
Non-Operating	To 15.3 km (50,284 ft)

Regulatory Approvals

The HP SCSI Card meets or exceeds the following EMI and safety standards when correctly installed in an HP 1000:

FCC Class A	(USA EMI)
VDE Level A	(Germany EMI)
CISPR22 Class A	(International EMI)
UL 478	(USA Safety)
CSA 220	(Canada Safety)
IEC 380	(International Safety)

2

Hardware Installation

This chapter describes how to install the HP 12016A SCSI Card and also describes the SCSI Card self-test. Installation procedures include checking the product for shipping damage and completeness, setting the switches, installing the card, and connecting the cables. Customers who follow the step by step instructions in this chapter can install the SCSI Interface hardware. Customers who do not wish to install the card can contact the local HP sales office for assistance.

CAUTION

Wear an anti-static wrist strap connected to a ground during *all* phases of handling and installing the SCSI Card. Failure to wear properly grounded anti-static wrist straps will result in static electricity damaging components on the card.

Pre-Installation Tasks

This section describes shipment receiving procedures and how to return the product, if necessary.

Unpacking and Inspecting the SCSI Card

Always wear properly grounded anti-static wrist straps when you handle the SCSI Card. Inspect the shipping cartons for visible damage. If visible damage exists, immediately submit a damage report to the carrier company and to Hewlett-Packard (or an authorized HP dealer). Follow the repacking procedures described later in this chapter to return the card, if necessary.

Make sure that the shipment you receive agrees with the product list on the shipping documents and that the contents of the cartons match the parts listed in Chapter One under the heading "Equipment Checklist." If any items are not included, immediately notify Hewlett-Packard.

Reshipping Instructions

If it is necessary to reship the HP SCSI Card, contact your nearest HP Sales and Support Office to coordinate the product's return. Attach a tag to the card explaining the reason for returning the product. Include your computer's model number and full serial number on the tag. Mark the shipping container "FRAGILE" to ensure careful handling. In any follow-up correspondence, please refer to your computer by model and serial number.

If possible, use the original packing material. If the original packing material is not available, use a commercially available anti-static shipping package, or purchase one from your nearest HP Sales and Support Office.

Installation Procedures

This section describes how to install the HP SCSI Card in your system. Figure 2-1 shows a typical SCSI Card installation in an HP 1000 computer.

Required Tools

To install the HP 12016A SCSI Card, all you need are the tools necessary to open the back door of your computer.

Power Budgeting

All cards installed in the HP 1000 put a load on the computer power supply. The HP SCSI Card draws 1.0 ampere at 5.1 volts. To ensure that the additional power drawn by the SCSI Card is within the power budget of your computer, refer to the installation and reference manual for your computer to find the computer's power supply requirements.

SCSI Card Layout

Figure 2-2 shows the layout of the SCSI Card, including the locations of the switches, the on-board fuse, the SCSI firmware PROM, the self-test LEDs (Light Emitting Diodes) and edge connectors P1, P2 and P3. Use this diagram to locate the switches you need to set before you install the SCSI card.

Do not use the modular jack shown in Figure 2-2. The modular jack is for Hewlett-Packard testing only, not for customer use. If you connect a telephone to this jack, you can damage the SCSI Card.

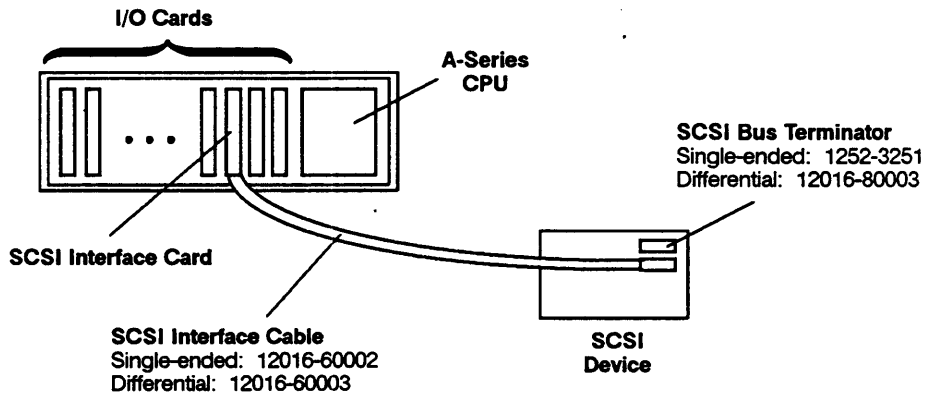

Single Device Configuration

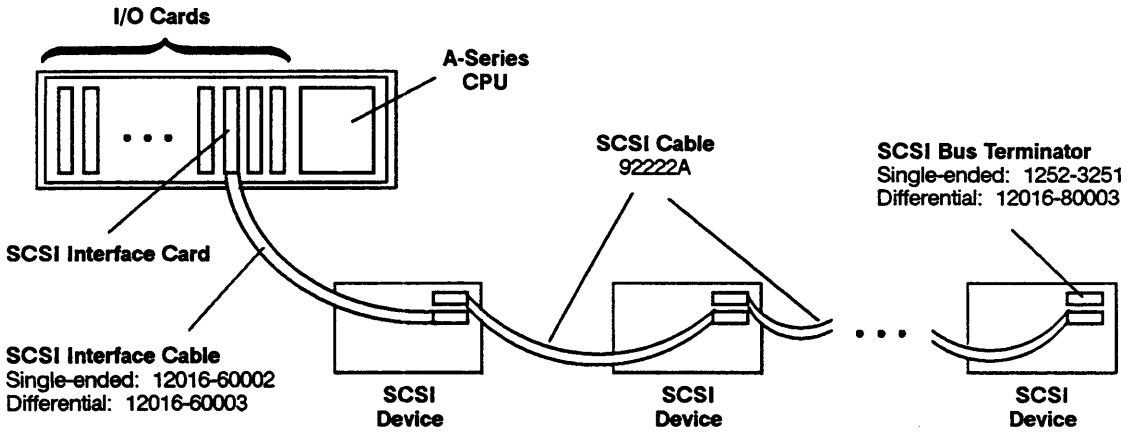

Multiple Device Configuration

Notes:

1. The above diagrams show typical installations of the SCSI card in a 20-slot box configuration. The SCSI card can be installed similarly into a 6-slot or 16-slot box.
2. Only one SCSI card is shown in each computer. Multiple SCSI cards can be installed in the backplane in any priority slot.
3. The first I/O slot to the right of the CPU for an A900 configuration is not shown although the SCSI card is supported in that slot.

Figure 2-1. SCSI Card Typical Installation

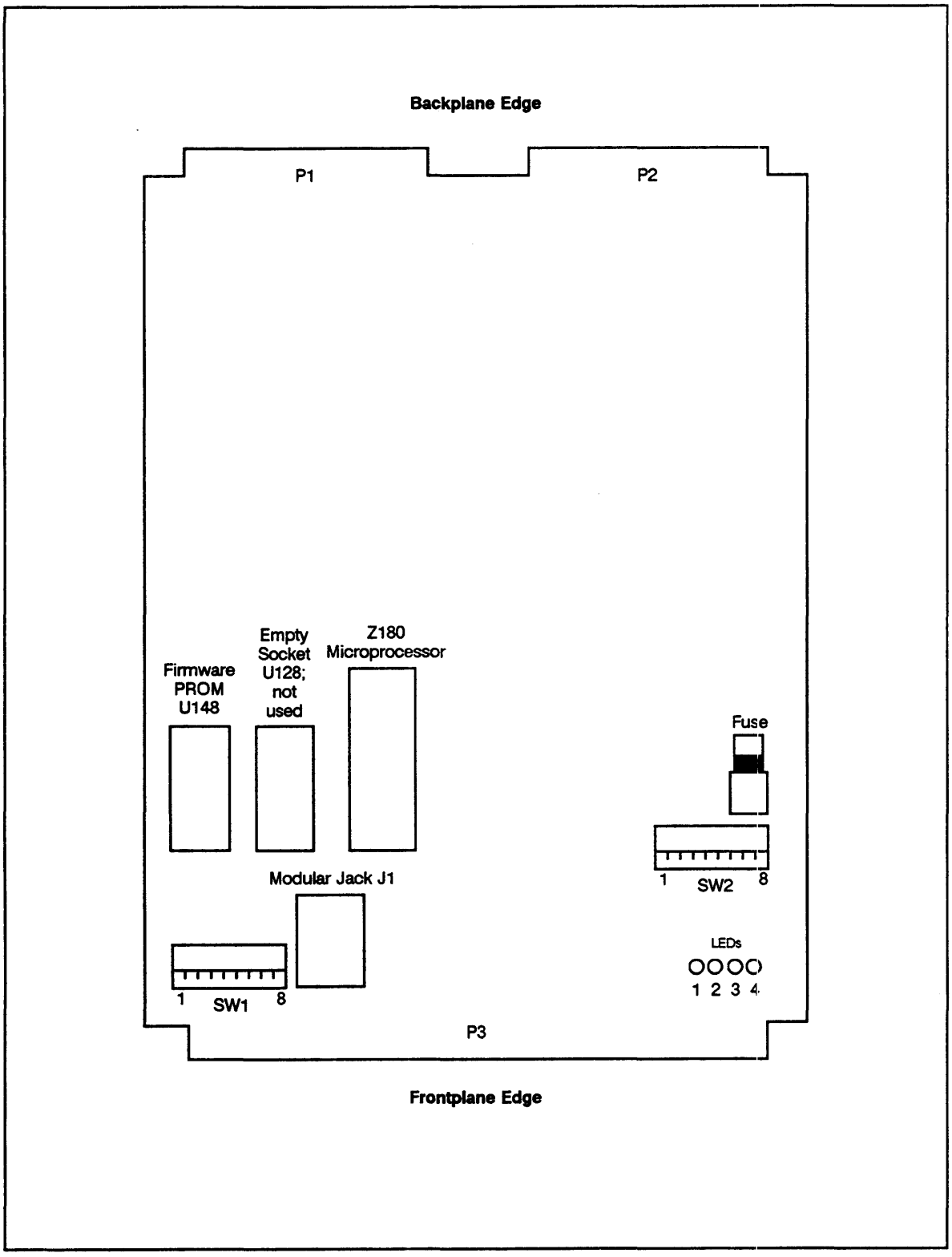

Figure 2-2. SCSI Card Layout

Switch Settings

This section describes how to set the two SCSI Card switches that specify the card's select code, address, and enable bus termination power.

CAUTION

Wear a properly grounded anti-static wrist strap during *all* phases of handling and installing the SCSI Card. Failure to wear properly grounded anti-static wrist straps will result in static electricity damaging components on the card.

The SCSI Card has two 8-position switches. Switch SW1 specifies the select code of the card and enables SCSI bus TERMPWR (bus termination power) from the card. Switch SW2 defines the card's SCSI address. *Before* you install the card, set these two switches. The open (up) position = 1. The closed (down) position = 0. Figure 2-3 shows an example of switch settings for SW1 and Figure 2-4 shows an example of switch settings for SW2.

Setting Switch SW1

Configure the eight switches on SW1 as follows:

SW1-1	Reserved, must be in the open (up) position.
SW1-2	Leave in closed (down) position to enable TERMPWR from the card. When SW1-2 is in the down position, the SCSI Card supplies the voltage for the SCSI bus terminators. If you open this switch (up position), the SCSI Card does not supply TERMPWR. In this case, another device on the SCSI bus *must* supply TERMPWR. Only *one* device on the SCSI bus should supply TERMPWR.
SW1-3 through 8	Specifies the card's interface select code. You cannot have duplicate select codes in the backplane. Ensure that the select code you specify here is unique. Switch 3 of SW1 is the most significant bit. Switch 8 is the least significant bit. All interface cards must have unique I/O select codes ranging from 20 to 77, inclusive. However, note that for the A400 computer, the on-board I/O is hardwired to select code 77.

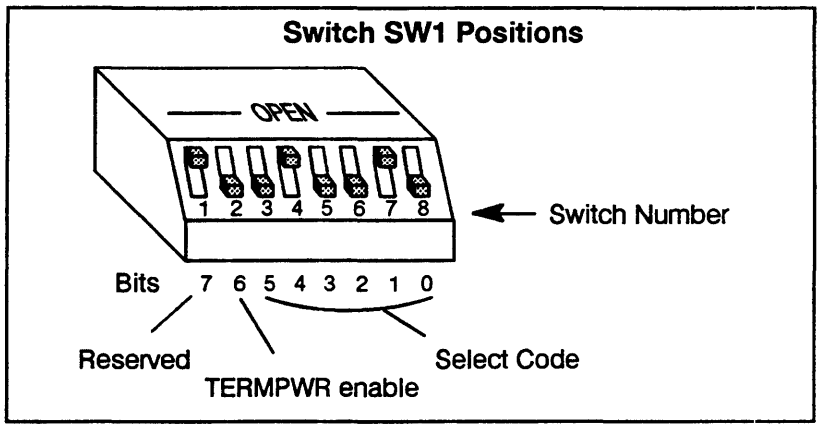

Switch Number	1	2	3	4	5	6	7	8
Octal Value			40	20	10	4	2	1

Figure 2-3. SW1 Settings

Figure 2-3 shows reserved switch SW1-1 in the open (up) position and SW1-2 in the closed (down) position. Switches SW1-3 through 8 specify the SCSI Card's select code. In this case, the example select code is 22 octal (switches 4 and 7 are open). This select code is only an example; the select code you use may differ.

Setting Switch SW2

Configure the eight switches on SW2 as follows:

SW2-1 through 5 — Reserved, leave in closed (down) position.

SW2-6 through 8 — These three switches determine the SCSI Card address. Switch 8 is the least significant bit. For a single initiator system (a card with one host computer and one to seven peripherals), the recommended setting is 7, as shown in Figure 2-4 (Switches 6 through 8 are open.)

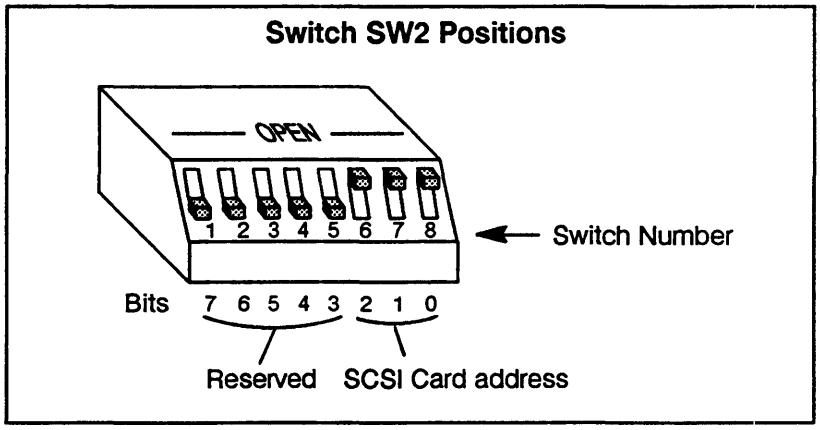

Switch Number	1	2	3	4	5	6	7	8
Octal Value						4	2	1

Figure 2-4. SW2 Settings

SCSI Card On-Board Fuse

The SCSI Card has a customer replaceable, two ampere, 125-volt on-board fuse, part number 2110-0517, to protect the card from shorts on the SCSI bus. See Figure 2-2 for the location of the fuse on the SCSI Card. Hewlett-Packard provides an extra fuse with the SCSI product (both the single-ended and differential versions) for your convenience.

This fuse can open if power is not turned off while you are connecting a cable to the device. This is one reason why it is very important to ensure that all power is off when you install the SCSI card and its cables, including power to all peripheral controllers on the SCSI bus.

The SCSI Card fuse is socketed so that it can be replaced easily.

Card Installation

This section describes how to install the SCSI Card in an HP 1000 computer.

CAUTION

Turn off power to the computer before installing the interface card and cables. If there is a battery BACKUP switch, set it to DISABLE. Failure to turn the power off and disable the battery BACKUP switch may result in damage to the interface card or attached I/O device.

Wear a properly grounded anti-static wrist strap during *all* phases of handling and installing the SCSI Card. Failure to wear properly grounded anti-static wrist straps will result in static electricity damaging components on the card.

WARNING

High current may be present. Failure to turn off power before opening the computer may allow contact with energy that may result in personal injury.

Take the following steps to install the SCSI Card:

1. Turn the computer's power OFF (0) at the LINE ON/OFF switch and disconnect the power cord. Check for a battery backup switch and set it to disable.
2. Remove or open the back door of your HP 1000 computer.
3. After setting the appropriate switches according to the previous instructions, slide the interface card into a slot in your computer's I/O backplane. The card's components should face upward or to the right, depending on whether your computer has vertically or horizontally oriented slots. Make sure that you *do not leave any empty slots above or to the right of the last I/O card in the backplane.* Empty slots between cards break the DMA (Direct Memory Access) and interrupt priority chains. The closer the card is to the CPU (by ascending slot order), the higher its DMA and interrupt priorities.

4. Firmly and evenly press the card into the backplane until edge connectors P1 and P2 slide completely into the backplane edge connectors. Figure 2-2 shows the locations of edge connectors P1 and P2. Ensure that the extractor handles facing the computer's back door do not bind on the card cage.

5. Replace the back door if you are not going to install the cables at this time. If you are going to install the cables now, leave the back door open and follow the steps described in the "Cable Installation" section.

Cable Installation

A single-ended or differential cable (part numbers 12016-60002 and 12016-60003, respectively) connects the HP SCSI Card to the bus. Do not connect a single-ended cable to a differential device, or vice versa. This does not damage the hardware, but will cause data errors. Do not connect the SCSI cable to any connector except as described in this section. Connecting a SCSI cable to the wrong connector may open the fuse on the SCSI Card.

See Figure 2-1 for a diagram of a typical HP SCSI Card installation. To connect the SCSI cables, take the following steps:

1. Ensure that the computer's power and battery enable switch are off, that the peripheral power is off, and that the power cable is disconnected. If the computer's back door is closed, remove or open it.

CAUTION

Power supply voltages (5Vdc) exist in the SCSI cable. POWER MUST BE TURNED OFF! Failure to heed this caution will result in damage to the equipment and will open the fuse on the card — *ensure that computer and peripheral device power is off.*

---

2. Connect the other end of the cable to the first device on the SCSI bus.
3. Connect the hooded cable connector to the edge connector of the SCSI Card, with the cable leading toward the right, or toward the bottom for a 20-slot card cage.
4. Close and secure the computer's back door. The computer's back door must be closed to ensure proper cooling and EMI compliance.
5. Connect additional devices to each other.
6. Plug the terminator into the last cable connector of the last physical unit on the SCSI bus. Make sure that your terminator matches your devices and cable. That is, the cables and devices all must be single-ended or differential, but not a combination of the two.
7. Reconnect the power cable to the computer, set the LINE ON/OFF switch to ON (1), set the battery backup to enable, turn on the peripheral(s), and reboot your system.

The HP 12016A supports one bus terminator at the end of the bus string with the interface card at the other end. The interface card contains terminations for its end of the cable. The card does not support a bus "T" configuration because the card's termination resistors are soldered in.

Verification of Correct Installation

Use the following checklist to troubleshoot problems that may occur during the installation and operation of the SCSI Card.

1. Check that the SCSI Card is seated firmly in the HP 1000 backplane.
2. Verify that the cable to the SCSI Card is properly connected.
3. Verify that the bus terminator is properly connected.
4. Turn on system power.
5. Check the four Light Emitting Diodes (LEDs) to see whether the self-test has been successfully completed or not. Refer to Table 2-5, under the heading "Self-Test", for definitions of the LED test patterns.
6. Verify correct completion of HP 1000 computer microcode and VCP self-tests. Refer to the installation and service manual for your computer for the LED test patterns.

SCSI Self-Test

A self-test program resident in PROM on the SCSI Card runs automatically when you turn on the power, reset the computer, or execute the %P or %T commands from the VCP prompt. The self-test performs the following tasks:

1. Verifies the integrity of the firmware in PROM.
2. Performs a simple test of the SCSI card on-board memory.
3. Tests the SCSI protocol interface chip for its ability to communicate with the SCSI Card microprocessor.

The SCSI self-test program does not check the device cable or the ability to communicate with the HP 1000. The host processor's self-test tests the backplane communication between the SCSI Card and the host processor.

Four red Light Emitting Diodes (LEDs) display SCSI Card status and report errors (if any) that result from the SCSI self-test. The LEDs are located on the SCSI Card (see Figure 2-2 for a diagram of the SCSI Card layout). Table 2-5 shows the possible self-test LED patterns and their definitions.

Table 2-5. LED Self-Test Status

LED 1	LED 2	LED 3	LED 4	Status
OFF	ON	ON	ON	Card PROM Checksum Error
OFF	ON	ON	OFF	RAM Test Failed
OFF	ON	OFF	ON	Reserved
OFF	ON	OFF	OFF	DMA Test Failed
OFF	OFF	ON	ON	Timer Test Failed
OFF	OFF	ON	OFF	SCSI Chip Test Failed
OFF	OFF	OFF	ON	Reserved
OFF	OFF	OFF	OFF	Passed Test *
BLINK	OFF	OFF	OFF	Normal Operation **

* The all-LEDs-off condition that indicates successful self-test completion only exists briefly; after this, LED number one blinks continuously, which indicates a normally functioning SCSI Card.

** The rate at which LED one blinks indicates the activity of the card. Faster blinking indicates an idle card. Slower blinking indicates a heavier load on the card. A rate as low as several seconds between blinks is normal.

You can see whether or not the SCSI Card has passed the SCSI self-test by checking the LEDs. A frozen LED pattern (the LEDs' pattern does not change and some LEDs are in a steady "on" condition) denotes a self-test failure. When the card passes the self-test, all of the LEDs briefly turn off. After this occurs, LED number one begins to blink, which indicates a normally functioning SCSI card.

If the SCSI Card fails the self-test, record the frozen self-test LED pattern, then return the card to Hewlett-Packard as described in this chapter under "Reshipping Instructions". The SCSI Card is not a user-repairable unit. If the card does not function correctly, please return it to Hewlett-Packard for repair or replacement.

If the SCSI Card passes the self-test and the LEDs remain off, the card is malfunctioning. Cycle the power to reinitiate the SCSI self-test.

Card Removal

Take the following steps to remove the HP SCSI Card from the HP 1000 backplane.

CAUTION

Turn off power to the computer and peripherals before removing the interface card and cables. If there is a battery BACKUP switch, set it to DISABLE before removing the hardware. Failure to turn off power and disable the battery BACKUP switch may result in damage to the interface card or attached I/O device.

WARNING

High current may be present. Failure to turn off power before opening the computer may allow contact with energy that may result in personal injury.

---

1. Set the computer's power OFF (0) at the LINE ON/OFF switch and disconnect the power cord. Check for a battery backup and set the switch to disable. Turn off power to any connected peripherals.
2. Remove or open the back doors of the computer.
3. Unplug the SCSI cable from the interface card.

CAUTION

Wear a properly grounded anti-static wrist strap during *all* phases of handling and removing the SCSI Card. Failure to wear properly grounded anti-static wrist straps will result in static electricity damaging components on the card.

---

4. Use the two extractor levers on the card edge to remove the SCSI Card from the backplane.
5. Slide the card out of the card cage.

To ensure the integrity of the DMA and interrupt priority chains, make sure that you do not leave a vacant card slot. Vacant slots between cards break the DMA and interrupt priority chains. If this occurs, your system will not function.

6. Replace and secure the back door.

3

Software Installation

This chapter describes how to install the HP SCSI Driver software, including boot preparation procedures. You can also use this procedure as a general guideline to install your own device driver. To install the SCSI software, you need to be familiar with the RTE-A Operating System. You also must be familiar with the generation process, and you must know how to boot your computer and how to use the Edit/1000 editing program. If you do not have this type of experience, do not install the software yourself. Find a qualified person who has the experience to install the software. For additional information, refer to the *RTE-A System Generation and Installation Manual*, part number 92077-90034.

Before you install the software, we recommend that you *back up your entire system and preserve the original copies of the system, snap, and answer files*. Do not delete the existing system — preserve it, just in case errors occur during software installation. If you are not familiar with the computer's operating system, we recommend that a Hewlett-Packard Customer Engineer (CE) or other qualified person install the SCSI software.

Take the following steps to install the SCSI software:

1. Copy the software from the shipped media to your system.
2. Create a new answer file based on your current answer file and preserve the old file. Add the SCSI changes to the new file.
3. Run the generator, RTAGN, on the new answer file.
4. Copy the system and snap files to the /SYSTEM directory, but do *not* overwrite or replace the old system files.
5. Create a new Boot Command file while preserving the old Boot Command file; create a new Welcome file while preserving the old Welcome file.
6. Reboot the system, specifying the new Boot Command file.
7. Verify correct system operation, then rename and preserve the old files; rename the new files to their permanent names.

The following sections describe each of these steps in detail.

Copying the Software

The HP SCSI peripheral media software includes the following drivers and programs (plus additional files):

IDQ35.REL, SCSI Interface Driver (Relocatable).
DDQ30.REL, Disk Device Driver (Relocatable).
DDQ30.MAC, Disk Device Driver (Source Code).
DDQ30_GEN.REL, Disk Generation Records (Relocatable).
DDQ30_GEN.MAC, Disk Generation Records (Source Code).
DDQ24.REL, Tape Device Driver (Relocatable)
DDQ24_GEN.REL, Tape Generation Records (Relocatable)
VSCSI.REL, The SCSI Online Verification Program.
VSCSILIB.REL, MACRO/1000 Support Routine
ZRAMTST.HEX, Downloaded Z180 RAM Test
ZLPBK.HEX, Downloaded Z180 LOOPBACK Test
SCSI.SNF, Software Numbering File (describes each piece of software that comes with the SCSI product).
README, a text file that contains information regarding additional software shipped with the SCSI product.

The way you copy the software depends on what kind of medium you ordered with the SCSI product.

To copy the SCSI software from CS/80 cartridge tape or 1600 BPI Magnetic Tape, create a directory called /SCSI, then copy the software to the /SCSI directory as follows:

```
CI> crdir /scsi <lu>      (creates the /SCSI directory on <lu>. Ensure that
                           the LU you select has enough space for the SCSI
                           software, which uses approximately 2,000 blocks.)
CI> wd /scsi
CI> fst
FST> mt <lu>              (where <lu> is the LU number of your tape drive)
FST> re @
FST> go
FST> ex
```

To copy the SCSI software from microfloppy disks, create a directory called /SCSI, then copy the software to the /SCSI directory as follows:

```
CI> crdir /scsi <lu>      (creates the /SCSI directory on <lu>. Ensure that
                           the LU you select has enough space for the SCSI
                           software, which uses approximately 2,000 blocks.)
CI> wd /scsi
```

Insert the first floppy into the drive, then enter the following commands:

```
CI>  mc  <lu>                (where <lu> is the LU number of your microfloppy
                              drive)
CI>  co  /f/scsi/  /scsi/
CI>  dc  <lu>
```

Remove the first floppy from the drive, insert the next floppy, then enter the following commands:

```
CI>  mc  <lu>                (where <lu> is the LU number of your microfloppy
                              drive)
CI>  co  /f/scsi/  /scsi/
CI>  dc  <lu>
```

The procedures described above copy the drivers and files to the /SCSI directory. *To load the additional software described in the README file*, list the README file and follow the instructions it contains.

Create a New Answer File

Take the following steps to create a new answer file that includes the SCSI changes. Make sure that you follow the steps to preserve your current answer file.

1. Create a new answer file by copying your current answer file to /SCSI/YourFavoriteName.ans. Make sure that you do not delete your old answer file.

2. If you are installing a hard disk or a rewritable optical disk, read the source file DDQ30_GEN.MAC to gain an understanding of the GEN records that will be used in the DVT statements in the next step.

3. Copy the files IDQ35.REL, DDQ30.REL, DDQ30_GEN.REL, DDQ24.REL, and DDQ24_GEN.REL to the /RTE_A directory. Edit YourFavoriteName.ans to add the following:

   a. Decide upon the LUs for the device(s). The LU numbers must fall within the range 1-63, inclusive.

   b. In the OS/Driver partitions section of the System Relocation Phase, add the appropriate RE lines. You do not need to add both of the device driver lines unless you have both disk and tape devices. Add the line *RE /RTE_A/DDQ30.REL* to support disk devices, and the line *RE /RTE_A/DDQ24.REL* to support tape devices.

      ```
      RE /RTE_A/IDQ35.REL
      RE /RTE_A/DDQ30.REL
      RE /RTE_A/DDQ24.REL
      ```

      Note that you can partition the drivers or not partition the drivers, as you desire.

A physical disk is the actual hardware upon which your data is recorded, such as the HP 92280 disk cartridge used in the 650/A drive. RTE allows you to subdivide the total disk storage into logical disks of more manageable size, if necessary, because the capacity of the physical drive may not be appropriate for your application. The DVT (Device Table) statements in your answer file define these physical disk subdivisions. Refer to the DDQ30_GEN.MAC source code if you need more information to choose the correct DVT statement entries.

c. In the Table Generation Phase, add an IFT (Interface Table) statement for each SCSI Card in your system. If you have one SCSI Card, you will have one IFT statement, and so on. Below each IFT statement, add one DVT statement for each device LU on the interface, in the format shown below. For disk device driver DDQ30, make sure that you set driver parameter 8 (Blocking Factor) to match your disk drive's physical block size. The following example shows statements for a system with two SCSI Cards with both disk and tape device drivers.

Note

The bold numbers (the LU and select code numbers) are *examples only*. They are not necessarily the LUs and select codes you will use. The DDQ30 lines of these examples assume HP 92280A (1024 byte sectors). Lines with an asterisk (*) indicate comments, not generation instructions.

```
IFT /RTE_A/IDQ35.REL  sc:22b
*
* Device #1 (SCSI address 0)
*
  DVT /RTE_A/DDQ30_GEN.REL m128mb:0, lu:30, dp:1:0, dp:8:3
  DVT /RTE_A/DDQ30_GEN.REL m128mb:1, lu:31, dp:1:0, dp:8:3
  DVT /RTE_A/DDQ30_GEN.REL m51mb_3:b, lu:32, dp:1:0
*
* Device #2 (SCSI address 1)
*
  DVT /RTE_A/DDQ24_GEN.REL,, lu:33, dp:1:1

IFT /RTE_A/IDQ35.REL  sc:23b
*
* Device #1 (SCSI address 0)
*
  DVT /RTE_A/DDQ30_GEN.REL m128mb:0, lu:34, dp:1:0, dp:8:3
  DVT /RTE_A/DDQ30_GEN.REL m128mb:1, lu:35, dp:1:0, dp:8:3
  DVT /RTE_A/DDQ30_GEN.REL m51mb_3:b, lu:36, dp:1:0
*
* Device #2 (SCSI address 1)
*
  DVT /RTE_A/DDQ24_GEN.REL,, lu:37, dp:1:1
```

Each IFT statement indicates an interface card. If you have three SCSI Cards in your computer, you will need three IFT statements in the new answer file.

You must associate at least one DVT statement with each IFT statement, as shown in the previous example. Interfaces without DVT statements cannot communicate with any devices.

System Generation

To generate the system, enter the following command:

```
CI>  rtagn,/SCSI/YourFavoriteName.ans,-,-,-
```

Note that you must use the .ans extension in order to use the dashes to indicate the default system, snap, and list files. The file names default to YourFavoriteName.sys, YourFavoriteName.snp, and YourFavoriteName.lst, respectively.

If system generation is successful, the message "Zero Errors" appears on the screen.

If system generation is not successful, an error message appears on the screen. Check the modifications you made to your answer file to ensure that you did not make any errors.

Copy System and Snap Files to the /SYSTEM Directory

When system generation completes without errors, enter the following commands to copy the system and snap files to the /SYSTEM directory:

```
CI>  co  YourFavoriteName.sys  /system/@
CI>  co  YourFavoriteName.snp  /system/@
```

Create New Boot Command and Welcome Files

The following steps describe how to create new Boot Command and Welcome files while preserving your current files:

1. Copy your current Boot Command file to /SYSTEM/YourFavoriteName.cmd.
2. Copy your current Welcome file to /SYSTEM/Welcomexx.cmd, where xx is any number from 0-99, inclusive, that is not used for another Welcome file.
3. Edit the "<file>.sys" and "<file>.snp" commands in your new Boot Command file (YourFavoriteName.cmd) to refer to your new system and snap files.
4. Edit the "st,,xx" command in your new Boot Command file (YourFavoriteName.cmd) to reference the new Welcome file (Welcomexx.cmd).

Reboot the System

Press the BREAK key to get the VCP prompt, then reboot the system, specifying the new Boot Command file, for example:

```
VCP>  %bdc27<YourFavoriteName.cmd>
```

The number 27 is the select code of the device from which you are booting. Select code 27 is used here as an example only.

If you have a 650/A Rewritable Optical Disk Drive installed, you can also use the "mc, < lu > " command to mount your SCSI LUs. When the LUs are mounted, you can create directories on your new SCSI device and copy software to it.

Finalizing the Software Installation

Confirm that the new LUs have been generated by executing the IO command. Next, manually verify that the new disks are functioning correctly by running the online verification test (VSCSI). You can do this by entering the following command at the CI > prompt:

```
CI>  vscsi <lu> -all
```

This command executes six SCSI verification tests and displays the test results on screen. For more information about VSCSI, see Chapter Four under the heading "Online Verification Program"; see Chapter Four under the heading "Non-Interactive Interface" for a description of the *-all* command.

Perform the following commands to finalize your software installation:

1. Rename your old system files to preserve them, for example,

   ```
   CI> rn Boot.cmd OLD_BOOT.cmd
   ```

   Do not delete your old files!

2. If it is appropriate, edit Welcomexx.cmd to mount the new disk LUs you defined when you created the new answer file.

3. Rename your new system files to the standard names.

Your SCSI software is now installed.

4

Troubleshooting

This chapter describes troubleshooting procedures for the SCSI Card. It includes a troubleshooting checklist, and descriptions of the SCSI self-test and the VSCSI verification program.

Troubleshooting

Use the following checklist to troubleshoot problems that may occur during the installation of an HP SCSI Card.

1. Make sure that the card is seated firmly in the backplane.
2. Make sure that the cables to the card are tightly and properly connected.
3. Verify that the SCSI bus terminator is correctly installed.
4. Make sure that the power to the SCSI devices is on.
5. Run a self-test by cycling the computer's power or using the %P or %T commands from the VCP prompt. If the SCSI Card fails the self-test, record the self-test LED pattern, then return the card to Hewlett-Packard as described in Chapter Two under the heading "Reshipping Instructions". The SCSI Card is *not* a user-repairable unit. If the card does not function correctly, please return it to Hewlett-Packard for repair or replacement.

SCSI Self-Test

When you turn power on, reset the computer, or execute the %P or %T commands from the VCP prompt, the SCSI microprocessor executes the SCSI self-test firmware. The program runs the following tests:

- Checks the integrity of the firmware in PROM.
- Performs a simple test of the SCSI Card on-board memory.
- Tests the SCSI protocol interface chip for its ability to communicate with the SCSI Card microprocessor.

The SCSI self-test program does not check the device cable or the ability to communicate with the HP 1000. The host processor's self-test tests the backplane communication between the SCSI Card and the host processor.

Four red Light Emitting Diodes (LEDs) display SCSI Card status and report errors (if any) that result from the self-test. The LEDs are located on the SCSI Card (see Figure 2-2 for a diagram of the SCSI Card layout). Table 4-1 shows the possible self-test LED patterns and their definitions.

Table 4-1. LED Self-Test Status

LED 1	LED 2	LED 3	LED 4	Status
OFF	ON	ON	ON	Card PROM Checksum Error
OFF	ON	ON	OFF	RAM Test Failed
OFF	ON	OFF	ON	Reserved
OFF	ON	OFF	OFF	DMA Test Failed
OFF	OFF	ON	ON	Timer Test Failed
OFF	OFF	ON	OFF	SCSI Chip Test Failed
OFF	OFF	OFF	ON	Reserved
OFF	OFF	OFF	OFF	Passed Test *
BLINK	OFF	OFF	OFF	Normal Operation **

* The all-LEDs-off condition that indicates successful self-test completion only exists briefly; after this, LED number one blinks continuously, which indicates a normally functioning SCSI Card.

** The rate at which LED one blinks indicates the activity of the card. Faster blinking indicates an idle card. Slower blinking indicates a heavier load on the card. A rate as low as several seconds between blinks is normal.

You can see whether or not the SCSI Card has passed the SCSI self-test by checking the LEDs. A frozen LED pattern (the LEDs' pattern does not change and some LEDs are in a steady "on" condition) denotes a self-test failure. When the card passes the self-test, all of the LEDs briefly turn off. After this occurs, LED number one begins to blink, which indicates a normally functioning SCSI card.

If the SCSI Card fails the self-test, record the self-test LED pattern, then return the card to Hewlett-Packard as described in Chapter Two under the heading "Reshipping Instructions". The SCSI Card is not a user-repairable unit. If the card does not function correctly, please return it to Hewlett-Packard for repair or replacement.

If the SCSI Card passes the self-test and the LEDs remain off, the card is malfunctioning. Cycle the power to reinitiate the SCSI self-test.

Online Verification Program

This section describes the SCSI online verification program (VSCSI), how to initiate it, its two user interfaces, the tests you can run, and possible error messages. VSCSI is an RTE-A application program which verifies that the SCSI Card is functioning correctly.

The verification program provides two different interfaces:

1. An Interactive Interface. Using this interface, you can enter commands that run specific verification tests, one test at a time. You can also specify the number of times to run each test. The test results are displayed on screen after you run each test. After a test runs, a command prompt reappears, and you can run another test or exit the program.
2. A Non-Interactive Interface. To use the non-interactive interface, specify the tests you want to execute and the number of times to execute the tests in the VSCSI runstring. You can run all tests or just selected tests. As VSCSI runs in non-interactive mode, the test results appear on screen, then the program terminates. You can run the non-interactive verification program from CI command files. You can test $RETURN1 to see if the program executed successfully (the result is 0 for success; a non-zero return is failure).

VSCSI Usage Help

You can get help at the CI prompt by entering

```
CI> vscsi
```

at the prompt without specifying an LU number or any other parameters. When you get help, the following program usage message appears on screen:

Usage: VSCSI [SCSILU] [-I] [-V] [-HP] [-L LOGFILE] [-LOOP COUNT]
[-ALL] [-SELFTEST] [-DI] [-ID] [-FMP] [-TERMPWR] [-TIMESTAMP]
[-DEVFLAG] [-RAMTEST] [-LOOPBACK]

-I = ignore errors; -V = verbose; -HP = non-HP terminal
-L LOGFILE = echoes messages to user specified LOGFILE
-LOOP COUNT = repetitively executes specified tests

Specifying one or more of the following tests causes VSCSI to execute non-interactively (and callable from a CI CMD file). Otherwise VSCSI executes interactively with the user entering commands at a prompt.

-ALL	=	all tests (except SELFTEST and LOOPBACK)
-SELFTEST (or -SE)	=	on-board SELFTEST
-DI	=	Display lus with vendor-model information
-ID	=	BOARD ID test
-FMP	=	FMP test
-TIMESTAMP (or -TS)	=	TIMESTAMP test
-TERMPWR (or -TE)	=	TERMPWR test
-DEVFLAG (or -DE)	=	check device flag operation
-RAMTEST (or -RAM)	=	SCSI board RAM test (32KB-512KB)
-LOOPBACK	=	LOOPBACK test (requires test hood)

Interactive Interface

The SCSI verification program has online commands that you can execute when you run the SCSI verification program in interactive mode. To call the interactive version of the verification program, at the CI prompt enter

```
CI> vscsi [scsilu] [optional nontest parameter] [optional nontest parameter]
```

where *VSCSI* calls the verification program and [*scsilu*] is the logical unit number of one of the SCSI device LUs associated with the SCSI Card you are testing. You can include any or all of the following optional nontest parameters in the runstring when you call the interactive version of the verification program. If you enter any test parameter in the runstring, you invoke the non-interactive version of the program (see the section titled "Non-Interactive Interface" in this chapter for more information):

-HP	This parameter notifies the verification program that the terminal is not a Hewlett-Packard terminal. This means that cursor positioning (<ESC> + <a> column c row R), homeup (<ESC> + <h>) and clear screen (<ESC> + <j>) are not supported.
-V	This parameter specifies verbose mode. Verbose mode displays information on screen about what the program is doing.
-I	This parameter tells the program to ignore all errors and continue with the verification program tests. This command is especially useful when you use the loop command to run commands repetitively. When you specify this parameter in the runstring, the program prints error messages on screen, then continues to run tests, instead of printing the error message and aborting. You could use the loop command to run a test many times (for example, 30,000 iterations) and find out from the on screen messages how many failures occurred, without interrupting the program. We recommend that you use the -I parameter in conjunction with the -L <logfile> parameter, so that you have a record of all errors encountered.
-L <logfile>	This parameter produces a log file that records the verification test results. The "-L" indicates that the next parameter is the name of the log file. The parameter <logfile> is the name of the log file. You can specify a full path name to produce the log file in a directory other than the working directory. If you do not specify a path name, the log file is created in the working directory. Note that if a file with the specified name already exists, it will be overwritten.

It is possible to call the verification program in interactive mode without specifying an LU number if you specify one or more of the four parameters described above (-HP, -V, -I or -L <logfile>) in the runstring, but without test parameters. (The section titled "Non-Interactive Interface" in this chapter describes runstring test parameters.)

When you call up the interactive interface, the command prompt `VSCSI:` appears on screen. You can execute the following commands from the prompt:

?, ??, HELP

Any of these three commands displays a list of all valid commands with brief descriptions.

LU [scsilu]

Defines the card you will test with the verification program, where [scsilu] is an LU number associated with a device on the SCSI Card. This command enables you to test different LUs without having to exit the verification program. For example, the command "LU 42" tells the verification program to verify the SCSI Card to which LU 42 is assigned.

If you do not specify an LU number and there is already an LU number specified, the program displays the message

SCSI LU = xx

where xx is the current LU number. If you do not specify an LU number and no LU number was specified in the runstring, the program displays the message

SCSI LU undefined. Use "LU <lu>" command.

where <lu> is the SCSI LU number.

FORMAT

Formats the disk associated with the current SCSI LU (for example, the Rewritable Optical Disk). This command also performs a disk initialization function as part of the formatting process, so that the disk is ready to use after formatting is complete. (The CI *IN* command is part of the formatting procedure.) The initialization provides the data structure necessary to access files and a description of which areas are available. Use this command to format disks before using them with the SCSI system. To format a disk, enter

VSCSI : `format`

at the command prompt. The message

Formatting the SCSI drive will DESTROY all data on the disk. This includes all LUs defined for the drive!!!

OK to proceed [no] ?

appears on screen. No is the default response. To abort the format, press the RETURN key, which displays the message

FORMAT not performed.

To proceed with the format, enter *yes* or *OK* at the prompt. The program displays the message

Formatting .... Please be patient.

to indicate that the format has begun. When the disk format is complete, the program displays the message

FORMAT complete.

If you attempt to format a SCSI drive that contains mounted LUs, the program displays the message

One or more lus on the SCSI drive are mounted.
Unable to format drive.

This message means that either the LU you want to format is mounted, or another LU with the same SCSI ID may be mounted, preventing your format command from executing. You can check this by executing the DISPLAY command. To dismount an LU, exit to the CI prompt, then execute a dismount command. When you use the format command, all LUs on the disk will be formatted.

CAUTION

If an LU is mounted, it is already formatted. Other users may be using the LU or have files on the LU. The FORMAT command affects ALL LUs on the drive, not just the LU that VSCSI is using to refer the board/drive. All data on the drive will be destroyed.

DISPLAY
OR DI

Displays a list of the LUs associated with the SCSI Card, including the address, the device's vendor and model and its current status. The following diagram is an example of what the DISPLAY command shows on screen; the numbers and status shown are examples only.

SCSI Verification Program Rev.5022

lu	Addr	Vendor-Model		Status
50	0	HP	S6300.650A	Mounted
51	0	HP	S6300.650A	Device Down
52	0	HP	S6300.650A	
53	0	HP	S6300.650A	
54	1	HP	2212A	Not Connected
55	1	HP	2212A	Not Connected
XX	2			No Lu defined

IFT select code: 71

In this display, "lu" is a list of the LU numbers associated with the SCSI Card, "Addr" lists the SCSI addresses, "Vendor-Model" gives the device vendor and model designations, and "Status" shows the current status of the LU.

The Status field in the display screen can contain one of the following messages:

`Mounted` — the LU is mounted to the FMP system.

`Device Down` — the RTE-A operating system considers this LU down, as indicated by DVT word 6.

`Not Connected` — this LU is generated into the RTE-A system, but is not attached to the SCSI bus.

`No LU defined` — an LU is not defined for this SCSI device (it is possible that the switches on the device are incorrectly set).

`Inquiry failed` — this is a device failure. VSCSI was not able to retrieve Vendor-Model information from the device.

NOTE

If TERMPWR is not on, the Vendor-Model field displays the message "Unavailable".

UP <lu>

Notifies the system that an LU is available. <lu> is any valid SCSI LU number. For example, RTE-A takes a device down when an error such as a time-out occurs. The LU will not be available again for use until you execute an UP command. It does not cause an error if you use UP on a device that is not down.

VERBOSE [on/off] or VE [on/off]

This command turns verbose mode on and off from the command line. Verbose mode displays more information on screen about what the program is doing (current status) and how the program is doing it. If you enter this command without the [on] or [off] parameter, a message that shows whether verbose mode is currently on or off appears.

LOOP [n] or REPEAT [n]	Defines how many times to execute the SELFTEST, FMP, ID, TIMESTAMP, TERMPWR, RAMTEST, LOOPBACK and DEVFLAG test commands described below. [n] is the number of times to repeat the subsequent test commands you enter at the command prompt — you can repeat a command a maximum of 32,767 times. To force commands to execute repeatedly, type LOOP or REPEAT at the command prompt, then type the number of times you want subsequent commands to run. After you enter a LOOP or REPEAT command, every subsequent FMP, ID, TIMESTAMP, TERMPWR, DEVFLAG, RAMTEST, LOOPBACK and SELFTEST command executes the number of times you specified. To return to executing those commands only once, type LOOP or REPEAT with one (1) as the number of times to repeat the test. If you enter the LOOP or REPEAT command without specifying a number of times to repeat, the current loop count appears on screen. For example, if you enter the command VSCSI : `loop 4` then all subsequent commands that looping affects are executed four times, until you change the repeat/loop number. If you enter the command VSCSI : `fmp` after entering LOOP 4, the program issues four FMP calls and displays the results. Any subsequent commands that can repeat also repeat four times. If you then enter the command VSCSI : `loop 1` the command repeat factor returns to one. You could use REPEAT 4 and REPEAT 1 instead of LOOP 4 and LOOP 1 to get the same results.
SELFTEST or SE	Issues a hard reset command (OTA 32B) to the SCSI Card to force it to execute the SCSI self-test.
FMP	Issues FMP calls to the SCSI LU to check the overall functioning of the SCSI Card, disk and cables. Tests include mounting and dismounting the disk and reading directories. This command does not isolate any faults to the main SCSI components (the SCSI Card, the SCSI disk or the SCSI cable). Note that this test takes several seconds to execute; a message appears on screen to notify you that the test is executing.
ID or REVCODE	Displays the ID and revision code of the SCSI Card. The ID of the SCSI Card is 115. This tests the SCSI Card's I/O processor and select code switch.
DEVFLAG or DE	Checks device flag operation.

TERMPWR or TE	Displays the status of the termpower status bit.
TIMESTAMP or TS	Displays the SCSI Card's firmware timestamp and address. The timestamp field is formatted as YYMMDD.MMNN, where YYMMDD is the year, month and day of the firmware release, and MM and NN are the major and minor firmware revision codes. The SCSI Address field contains the address of the SCSI Card itself, which should be 7. VSCSI obtains this value from switch SW2 on the SCSI Card (see Chapter Two for more information on switch settings).
RAMTEST or RAM	Tests SCSI Card RAM (32KB - 512KB). This test only reports "PASSED" or "FAILED". The RAMTEST requires the file "ZRAMTST.HEX" to be located in the /PROGRAMS, /SYSTEM, /SCSI or working directory.
LOOPBACK	The LOOPBACK test requires a test hood, part number 12016-60007, which you can order from your local sales office. If you do not have the test hood, the message "LOOPBACK test FAILED" appears. The LOOPBACK test also requires the file "ZLPBK.HEX" to be located in the /PROGRAMS, /SYSTEM, /SCSI or working directory.
EXIT, QUIT or ABORT	Exits the interactive verification program.

If you enter an invalid command, the message "Unknown command. Use ?? for help" appears.

Non-Interactive Interface

This section describes the tests that run when you call the SCSI verification program in non-interactive mode. You can call the non-interactive mode verification program from a CI command file. To call the verification program in non-interactive mode at the CI prompt enter:

```
CI> vscsi <scsilu> [optional parameter] [optional parameter] ...
```

where *VSCSI* calls the verification program and *<scsilu>* is the LU number of one of the SCSI device LUs associated with the SCSI Card you are testing. In the runstring, you can enter any number of optional parameters, which are described below. The non-interactive verification program runs the tests specified by the parameters, then exits back to the CI prompt. Unless you tell the program to ignore errors (how to do this is described below), the program terminates on the first failure, leaving an error message on screen.

Omitting test parameters from the runstring calls the interactive version of the verification program. Specifying any test (-SELFTEST, -FMP, -ID, -DEVFLAG, -TERMPWR, -TIMESTAMP, -DISPLAY, -RAMTEST, -LOOPBACK or -ALL) in the runstring invokes non-interactive mode. The optional parameters you can specify when you call the non-interactive version of the verification program are as follows:

-L <logfile>	This parameter produces a log file that records the verification test results. The "-L" indicates that the next parameter is the name of the log file. The parameter <logfile> is the name of the log file. You can specify a full path name to produce the log file in a directory other than the working directory. If you do not specify a path name, the log file is created in the working directory. Note that if a file with the specified name already exists, it will be overwritten.
-HP	This parameter notifies the verification program that the terminal is not a Hewlett-Packard terminal. This means that cursor positioning (<ESC> + <a> column c row R), homeup (<ESC> + <h>) and clear screen (<ESC> + <j>) are not supported.
-V	This parameter specifies verbose mode. Verbose mode displays more information on screen about what the program is doing.
-I	This parameter tells the program to ignore all errors and continue with the verification program tests. It is meaningful only when you specify a loop count of more than one in the runstring. When you specify this parameter, the program prints error messages on screen, then continues to run the tests specified in the runstring. You could use the -LOOP parameter to run a test many times (for example, 30,000 iterations) and find out from the on screen messages how many failures occurred, without interrupting the program. We recommend that you use this parameter in conjunction with the -L <logfile> parameter, so that you have a record of all errors encountered.
-LOOP [n]	Defines how many times to execute the -SELFTEST, -FMP, -ID, -TIMESTAMP, -TERMPWR, -RAMTEST, -DISPLAY, -ALL, -LOOPBACK and -DEVFLAG, command parameters described below. [n] is the number of times to repeat any of these commands entered as parameters in the verification program runstring — you can repeat a command a maximum of 32,767 times. To force commands to execute more than once, enter -LOOP and a number in the verification program runstring. For example, the runstring `CI> vscsi 33 -loop 4 -fmp` calls the program in non-interactive mode for LU 33, executes the FMP test four times, then exits to the CI prompt.
-SELFTEST or-SE	This parameter forces a hard reset of the SCSI Card (OTA 32B) to run the SCSI self-test when you call the verification program. (The self-test is described earlier in this chapter under the heading "Self-Test".) If you do not specify this parameter, the verification program does not execute the SCSI self-test as part of the verification process.
-DISPLAY or -DI	Displays a list of the LUs associated with the SCSI Card,

including the address, the device's vendor and model and its current status. The DISPLAY command description in the section titled "Interactive Interface" in this chapter shows a diagram of the display screen. The following diagram is an example of the display screen with all possible non-interactive runstring tests executed and their results displayed (you can do this by specifying the -ALL and -SELFTEST commands in the runstring); the numbers and status shown are examples only. The runstring test results appear in the column on the right side of the screen.

SCSI Verification Program Rev.5022

```
lu    Addr        Vendor-Model              Status        | IFT select code: 71
---   ----  ------------------------------  -------------  |
50     0     HP          S6300.650A         Mounted        | Board ID:        115
51     0     HP          S6300.650A         Device Down    | Board revision:    0
52     0     HP          S6300.650A                        | Select code:      71
53     0     HP          S6300.650A                        |
54     1     HP          2212A              Not Connected  | TERMPWR:  ON
55     1     HP          2212A              Not Connected  | Cable:  SINGLE-ENDED
XX     2                                    No Lu defined  |
                                                           | Timestamp: 910110.0004
                                                           | SCSI addr: 7
                                                           |
                                                           | Selftest PASSED.
                                                           | FMP test PASSED.
                                                           | RAM test PASSED.
```

In this display, "lu" is a list of the LU numbers associated with the SCSI Card. In non-interactive mode, there is a limit of 15 LUs in the display, because the non-interactive display does not scroll. "Addr" lists the LU addresses, "Vendor-Model" gives the device vendor and model designations, and "Status" shows the current status of the LU. The right hand side of the display screen shows the IFT select code, the SCSI board ID, revision and select code, whether or not TERMPWR is on, and what type of cable is connected. In addition, the information from other VSCSI tests you are running is displayed in the right column.

The Status field in the display screen can contain one of the following messages:

`Mounted` — the LU is mounted to the FMP system.

`Device Down` — the RTE-A operating system considers this LU down, as indicated by DVT word 6.

`Not Connected` — this LU is generated into the RTE-A system, but is not attached to the SCSI bus.

`No LU defined` — an LU is not defined for this SCSI device (it is possible that the switches on the device are incorrectly set).

`Inquiry failed` — this is a device failure. VSCSI was not able to retrieve Vendor-Model information from the device.

The Cable field in the right display column can contain one of the following messages:

`SINGLE-ENDED` — A single-ended cable is attached and there are no differential devices on the bus.

`DIFFERENTIAL` — A differential cable is attached and no single-ended devices are on the bus.

`DF cable-SE device` — A differential cable is attached, but the bus has a single-ended device or NO cable is attached to the SCSI card.

`SE cable-DF device` — A single-ended cable is attached, but there is at least one differential device on the bus.

NOTE

If TERMPWR is not on, the Vendor-Model field displays the message "Unavailable".

-FMP	Issues FMP calls to the SCSI LU to check the overall functioning of the SCSI subsystem (card, disk, cables). Tests include mounting and dismounting the disk and reading directories. This command does not isolate any faults to the main components (the SCSI Card, disk or cable). Note that this test takes several seconds to execute; a message appears on screen to notify you that the test is executing.
-ID	Displays the ID and revision code of the SCSI Card. The SCSI ID number is 115. This tests the SCSI Card's I/O processor and select code switch.
-DEVFLAG or -DE	Checks device flag operation.
-TERMPWR or -TE	Displays TERMPWR status and cable type.
-TIMESTAMP or -TS	Displays the SCSI Card's firmware timestamp and address. The timestamp field is formatted as YYMMDD.MMNN, where YYMMDD is the year, month and day of the firmware release, and MM and NN are the major and minor firmware revision codes. The SCSI Address field contains the address of the SCSI Card itself, which should be 7. VSCSI obtains this value from switch SW2 on the SCSI Card (see Chapter Two for more information on switch settings).

-RAMTEST or -RAM	Tests SCSI Card RAM (32KB - 512KB). This test only reports "PASSED" or "FAILED". The RAMTEST requires the file "ZRAMTST.HEX" to be located in the /PROGRAMS, /SYSTEM, /SCSI or working directory.
-LOOPBACK	The LOOPBACK test requires a test hood, part number 12016-60007, which you can order from your local sales office. If you do not have the test hood, the message "LOOPBACK test FAILED" appears. The LOOPBACK test also requires the file "ZLPBK.HEX" to be located in the /PROGRAMS, /SYSTEM, /SCSI or working directory.
-ALL	Runs all verification program tests except the SCSI self-test and loopback test. You can specify the -SELFTEST, -I or -LOOP parameters in conjunction with -ALL. The -ALL parameter runs the -ID, -TERMPWR, -TIMESTAMP, -DISPLAY, -FMP and -DEVFLAG tests.

For example, the SCSI verification program runstring

```
CI> vscsi 41 -l test.log -v -fmp
```

calls up the non-interactive version of the verification program (because the test name -fmp was specified in the runstring) and specifies LU 41. The parameters tell the program to create a logfile called "test.log" in the working directory, to run in verbose mode, and to execute the FMP test. If a failure occurs, the program prints an error message on screen, then exits to the CI prompt. If no failures occur, the program runs the FMP test, then exits to the CI prompt.

VSCSI Program Error and Information Messages

VSCSI detects error conditions in SCSI operation. Errors can occur when attempting to validate the SCSI LU, during command parsing, in the runstring, and while attempting to access the SCSI LU. Additionally, errors can occur in relation to the SCSI self-test, FMP test, RAMTEST and LOOPBACK test, and in getting the firmware timestamp. The verification program also detects driver errors and provides several status messages.

Most of the VSCSI status messages do not appear on screen unless you are running the program in verbose mode. Status messages are self-explanatory and simply inform the user about what the program is doing. For example, when you execute the FMP test, the message "FMP test executing. Please wait." appears. This message notifies you that the FMP test is running, because this test takes several seconds to execute.

The non-interactive version of the verification program also returns an error code in the CI variable $return1. The error code can be tested in CI command files.

Error Messages During SCSI LU Validation

The following error messages are related to validating the SCSI LU. When the verification program detects an LU validation error, it displays an error message, then the program terminates.

The program cannot display the LU table or any specific information, because the LU number entered in the runstring is illegal.

SCSI LU not supplied

Error: No SCSI LU number was included in the verification program runstring. This message appears only when you are invoking non-interactive mode.

Solution: Enter a valid LU number in the runstring when invoking the verification program.

SCSI LU undefined. Use "LU <lu>" command

Error: In the interactive interface, you entered a hardware test command without specifying an LU number. This can occur if you invoke the interactive interface without specifying an LU number. For example, the runstring "VSCSI -V" invokes the interactive version of the verification program without an LU number.

Solution: Use the LU command (described in the section titled "Interactive Interface" in this chapter) to specify a valid LU on which to run the test(s).

LU xxx illegal. Valid range is 1 - maxlu

Error: The SCSI LU number entered in the runstring or the LU number specified in the "LU" command is outside the range of valid LU numbers. The supplied LU number is either less than one or greater than the maximum LU generated into the system. The variable *maxlu* is the highest LU number generated into the system.

Solution: Enter a valid LU number within the range the error message reported.

LU xxx not assigned

Error: The SCSI LU entered in the runstring or the command has a DVT (device table) address of zero. This means that the LU is not assigned to a device.

Solution: Make sure that the LU number you enter is assigned to a SCSI Card.

LU xxx is wrong IFT type. Was xxxB, should be 35B

Error: The SCSI LU entered in the runstring or the command (xxx) is not associated with the SCSI Card. The IFT (interface table) type associated with the given LU number (the first "xxxB" in the error message) is displayed along with the expected IFT type (35B).

Solution: Enter an LU number that is associated with a SCSI Card. This ensures that the IFT type will be correct.

Command Parsing Errors

A command parsing error can only occur when using the interactive interface (no commands are parsed in the non-interactive interface — all of the commands are in the program runstring).

Invalid LOOP value

> Error: A non-numeric value was entered with the LOOP or REPEAT command. This occurs when you enter any non-numeric value (any alphabetic character, punctuation mark or special character other than numbers) or invalid number as the number of times to repeat a command in command line mode. You can repeat commands up to 32,767 times.
>
> Solution: Enter a valid numeric value after the REPEAT or LOOP command.

Unknown command

> Error: The command entered is unknown or misspelled.
>
> Solution: Enter the command again or use the HELP, ? or ?? command to get a list of valid commands.

Runstring Parsing Errors

A runstring parsing error can occur only when using the non-interactive interface (you do not enter commands in the runstring when using the interactive interface).

Error In Specifying [-LOOP count] parameter

> Error: A non-numeric value was entered with the -LOOP parameter in the verification program runstring. This error is similar to the "Invalid LOOP value" error, except that it occurs in the runstring, not in the command line.
>
> Solution: Enter a numeric value after the -LOOP parameter in the runstring.

Runstring parameter "[invalid parameter]" illegal

> Error: One or more parameters in the verification program runstring are illegal or invalid. The error message identifies the first illegal parameter in the runstring.
>
> Solution: Enter the runstring again, using only legal parameters.

No LOGFILE name supplied

> Error: In the runstring, the parameter -L, which echoes the verification program test results into a log file, did not have a LOGFILE file name following it.
>
> Solution: When you use the parameter -L in the runstring, make sure that you specify a file name for the LOGFILE data.

SCSI LU Table Access Errors

These errors occur when you invoke the ID, REVCODE, TIMESTAMP (TS), DEVFLAG, FMP, TERMPOWER or SELFTEST commands without the correct select code specified in the verification program runstring.

DIAGNOSE MODE FAILED. SCSI Card not installed or has wrong select code

Error: The verification program attempted to retrieve the SCSI Card's ID and revision code by entering diagnose mode 1 for the select code given in the IFT (interface table). Diagnose mode fails if the select code of the card does not agree with the select code in the IFT. The CPU requires the installed card to have a select code equal to the select code in the IFT. If the select codes are not the same, this error message appears.

Solution: First make sure that there is an installed SCSI Card. If the card is installed in the system, make sure that it has a valid select code and is generated into the system correctly, so that the SCSI Card's select code is equal to the select code in the IFT table. Switch SW1 determines the SCSI Card's select code (see Chapter Two under the heading "Switch Settings" for a detailed description of how to set the card's select code).

Device Flag Cannot Be Cleared

Error: This message indicates that the program found Flag 30B set and that a CLF 30B command (clear Flag 30B) did not clear the flag.

Solution: This is a hardware failure; return the SCSI Card to HP.

Self-Test Messages and Errors

The following error messages can occur only when you invoke the SCSI Card self-test ("-SELFTEST" parameter) in the verification program runstring.

Performing a HARD RESET on card

This is not an error message. This message indicates that the program is beginning the self-test portion of the verification tests.

SELFTEST FAILED. Device flag not set within 10 seconds.

Error: The verification program issued an OTA 32B command (hard reset) to force a SCSI Card self-test and waited for the device flag to be set. The flag was not set within the ten-second window (this time limit is defined by the VCP code.)

Solution: Perform a power cycle of the system and check the status of the LEDs on the SCSI Card. Refer to the section titled "SCSI Self-Test" in this chapter.

FMP Test Errors

FMP Device down.

Error: The SCSI LU is down.

Solution: Use the command "UP [scsilu]" to up the device.

Miscompare error at record xxxx.

Error: The FMP test failed. The text in record xxxx does not equal the expected value.

Solution: Check record xxxx for errors.

In addition to these messages, errors that the FMP routines detect can report other error messages. Refer to the *RTE-A Programmer's Reference Manual*, part number 92077-90007, for information about these errors.

RAMTEST and LOOPBACK Test Errors

The RAMTEST requires a file named "ZRAMTST.HEX" and the LOOPBACK test requires a file named "ZLPBK.HEX". These two files must be located in either the working directory, the /PROGRAMS directory, the /SYSTEM directory or the /SCSI directory.

If the required files are not in one of the appropriate directories, the following message appears:

No such file XXXXX.HEX

where XXXXX.HEX is ZRAMTST.HEX if you are running the RAMTEST and ZLPBK.HEX if you are running the LOOPBACK test.

The following errors can appear in response to a corrupt .HEX file. The solution to all of these errors is to replace the corrupt .HEX file.

Unexpected EOF

Error: The end of the file was detected before the Intel END record was encountered.

Record too short.

Error: The record is shorter than 11 (eleven) bytes.

Not INTEL Hex format.

Error: The record contained non-hexadecimal characters.

Record type must be 0 or 1.

Error: The Record Type field contained a value other than 0 or 1.

Checksum error.

Error: The record is corrupt so that the sum of the length, address, type and data bytes did not equal the checksum value.

Firmware Timestamp Errors

The following errors can occur when the verification program attempts to get the firmware timestamp.

Timeout waiting for interrupt

Error: The verification program did not receive the expected device flag (SFS sc) after sending the command to retrieve the firmware timestamp.

Solution: Run the self-test to verify that this is a hardware failure. Return the SCSI Card to Hewlett-Packard if this condition persists.

Protocol error: Response FIFO empty

Error: The verification program received the correct device flag after sending the command to retrieve the timestamp, but the SCSI Card status word (LIA 32B) indicated that the response FIFO was empty. The verification program expects the response FIFO to contain the timestamp response, therefore, the response FIFO should not be empty.

Solution: Run the self-test to verify that this is a hardware failure. Return the SCSI Card to Hewlett-Packard if this condition persists.

Bad response type in returning timestamp

Error: The response to the timestamp retrieval command did not contain the expected response type, which is 5.

Solution: Verify that the proper drivers and firmware are installed. If this error persists, return the SCSI Card to Hewlett-Packard.

SCSI Card not installed or select code incorrect

Error: The global register on the SCSI Card is not set properly. This means that the switch setting for the card's select code is incorrectly set on switch SW1 or the select code is incorrectly generated in the interface table — that is, the select codes in the interface table and on the card itself are not the same. Because the select codes do not agree, the program cannot find the SCSI Card.

Solution: Reboot the computer and check the list of SCSI Cards and their select codes to ensure that each select code is correctly set on SW1 and correctly generated into the system.

Driver Errors

Driver Error: TERMPWR not Enabled

Error: The termination power is not enabled on the SCSI Card and is not enabled from any of the SCSI devices.

Solution: Enable termination power from the SCSI Card as described in Chapter Two or enable termination power from one of the devices.

If VSCSI detects driver errors when issuing EXEC calls to a SCSI device, VSCSI prints the error condition, but does not print the error number. Driver error messages are preceded by the text "Driver Error:", followed by a description of the error condition. Appendix A describes driver error messages and provides solutions for the errors. If the driver returns an error code unknown to VSCSI, VSCSI displays the error code in decimal. For example, an unknown error might be "Driver Error: 47 (decimal)".

VSCSI prints the following errors originating in the device driver (the decimal error number is provided in this description, even though it is not reported on screen):

Error Number	Error Message
1	Illegal request.
2	Device not ready.
3	Device timeout.
5	Transmission error.
6	Device write protect.
7	Address error.
10	Disk fault.
12	Insufficient driver table space.
20	Disk not mounted.
21	Wrong media; No disk in drive.
22	Incompatible cartridge.
23	Medium un-initialized or format corrupt.
24	No spares available.
25	Automatic re-allocation failed.
26	Defect list update failed.
27	Defect list not available.
29	Illegal logical block address.
62	Device busy.

VSCSI prints the following errors originating in the interface driver (the decimal error number is provided in this description, even though it is not reported on screen):

Error Number	Error Message
28	Protocol error.
40	TERMPWR not enabled.
41	Device driver bypassed on 1st call.
42	Card SCSI address = Device SCSI address.
43	Select error. SCSI device not on bus.
44	CDB length or CDB type illegal.
45	Firmware/driver rev codes incompatible.

Other Errors

Several other error messages can appear during VSCSI testing. For more information about these errors, refer to the *RTE-A Programmer's Reference Manual*, part number 92077-90007.

FORMAT operation failed.

> Error: FORMAT operation did not succeed. This message appears in conjunction with other error messages that specify the exact error condition.

System ABORTED call. Error code = AABB

> Error: An EXEC call was aborted. AA and BB are the contents of the A and B registers, respectively.

TERMPWR missing.

> Error: A cable is not connected or a fuse has opened.

5

Programming Reference Material

This chapter provides information on how to access SCSI devices from user-written application programs (such as device drivers), for everyday use of the SCSI Card. The examples in this chapter are given in FORTRAN.

Card Communication Overview

The SCSI Card communicates with firmware and drivers at several levels, as shown in Figure 5-1. This chapter describes the SCSI Card communication above the double line (above the 12016A SCSI Interface Card(s) level shown in the diagram).

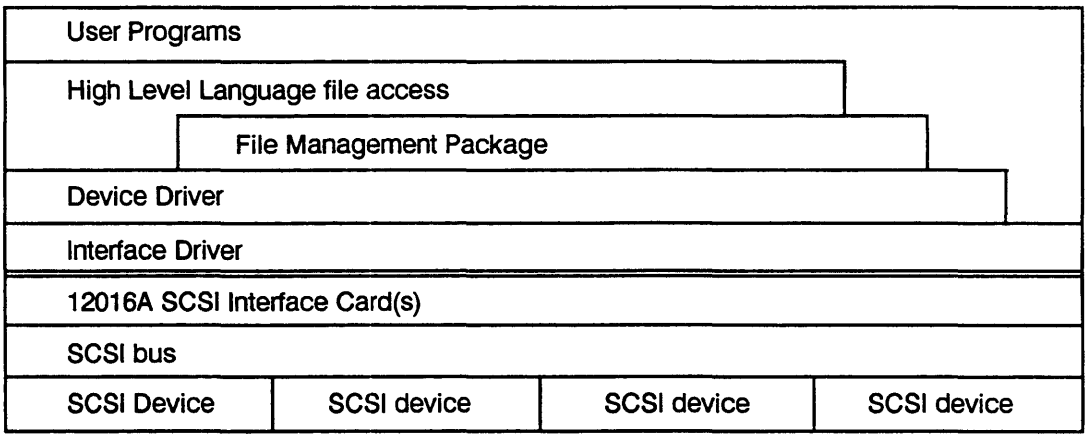

Figure 5-1. SCSI Card Communications Overview

User programs can talk directly to the High Level Language file access (HLL), the File Management Package (FMP), the device driver(s) and the interface driver(s). The HLL can talk directly to the FMP, the device driver(s) and the interface driver(s). The FMP can talk directly to the device driver(s) and the interface driver(s). The device driver talks directly to the interface driver, which communicates with the SCSI Interface Card.

This chapter covers only the device and interface driver EXEC calls, because the High Level Language and File Management Package (FMP) accesses are transparent.

Digital Audio Tape (DAT) Device Driver DDQ24

The following sections describe tape device driver DDQ24, including Read and Write request calls, Z buffer calls and control request calls.

DDQ24 Driver Read, Write and Control Calling Sequences

You can execute read and write calls, Z-Buffer read and write calls, and control calls. Z-Buffer read and write calls enable you to construct bus transactions that are outside the range of the usual read and write transfers, such as tape eject requests. Control calls execute control commands.

The calling sequences for these calls are as follows:

Read: CALL EXEC (1,CNTWD,BUFR,BUFLN)
Write: CALL EXEC (2,CNTWD,BUFR,BUFLN)

Z-Read: CALL EXEC (1,CNTWD,BUFR,BUFLN,COMMAND,COMMANDLN)
Z-Write: CALL EXEC (2,CNTWD,BUFR,BUFLN,COMMAND,COMMANDLN)

Control: CALL EXEC (3,CNTWD,[PARM1])

Calling Sequence Parameters

The first parameter is an integer, either 1, 2, or 3. This integer determines what type of call is being made:

"1" indicates a read,
"2" indicates a write,
"3" specifies a control call.

The difference between the usual read/write calls and Z-read/Z-write calls is that the Z-Buffer calls include two extra parameters to specify the command and the command's length. All Z-read/Z-write driver calling sequences must include these two parameters.

The second parameter is the "CNTWD" parameter, which is declared as a one word integer. You use the subfunction bits (11 through 6) of the "CNTWD" parameter differently for read and write requests than you do for control requests. All driver calling sequences must include this parameter.

Control Word Bits:															
15	14	13	12	11	10	9	8	7	6	5	4	3	2	1	0
BB	NB	UE	Z	SubFunction						Logical Unit Number					

The following paragraphs describe the control word bits and their functions.

15 BB — BB stands for bypass bit. If set (= 1), this bit allows you to bypass the tape device driver and call the interface driver directly. We strongly recommend that you *do not do this* unless you are certain that you know what you are doing.

14 NB — NB stands for no buffer bit. If set, there is no buffer bit to inhibit output buffering. This has no effect on the driver.

13 UE — UE stands for user error handling, which has no effect on the driver. Normally, this bit is not set, which enables the system to interpret errors and take action to correct them. If this bit is set, the user interprets errors and takes action to correct them.

12 Z — Z stands for the Z-Buffer bit, which is a dual buffer bit. If set, this bit indicates that the call is a Z-Buffer read or write, instead of an ordinary read or write. It also adds two buffers, one for the Z-read/write command and one for the Z-read/write command length. If this bit is "0", it indicates an ordinary read or write.

11 - 6 — These bits indicate the read/write subfunction or the control command subfunction, depending on the type of call.

For *read* and *write* calls (including Z-read and Z-write calls; a "1" or "2" as the first parameter of the call indicates a read or a write, respectively), there is one subfunction. This subfunction has an octal value of 0 (zero), and indicates a normal read or write operation.

For *control call requests* (identified by a "3" as the first parameter of the call), subfunction bits 11 through 6 indicate a control command. The SCSI driver supports the following control requests:

Octal Value	Definition
0B	Rewind
1B	Write "n" File Mark(s)
2B	Backward space "n" record(s)
3B	Forward space "n" record(s)
4B	Rewind
5B	Rewind and go off line (unload tape)
6B	Dynamic Status Request
7B	Write "n" Set Mark(s)
10B	Backward space "n" Set Mark(s)
11B	Forward space "n" Set Mark(s)
13B	Forward space "n" file(s)
14B	Backward space "n" file(s)

where "n" is a positive integer from 1 (one) to 255, inclusive.

The section titled "Control Commands" in this chapter describes each of these commands in detail.

5 to 0 These bits represent the Logical Unit (LU) Number. Normally, the LU number can be any number from 0 (zero) to 63, inclusive. However, if you use an XLUEX call instead of a normal EXEC call, you can use LU designations from 0 to 255, inclusive. For information about XLUEX calls, refer to the *RTE-A Programmer's Reference Manual*, part number 92077-90007.

The *BUFR* parameter indicates the user buffer address to read or write. This parameter is valid only for read and write calls (including Z-Buffer calls), not for control calls. The buffer address can be any legal value, as enforced by the operating system, just like any other exec call buffer.

The *BUFLN* parameter is the request length that specifies the number of words or bytes to be transferred. A positive value indicates that the number is the number of words. A negative value indicates that the number equals the number of bytes, except for the special case of -32768 (100000B), which indicates 32,768 words. This parameter is valid only for read and write calls (including Z-Buffer calls), not for control calls.

The *COMMAND* parameter specifies the Command Descriptor Block (CDB), and is used only in Z-read and Z-write calls. This parameter contains the SCSI command you want to send to the device (for a description of Hewlett-Packard SCSI commands, refer to the *HP35451A OEM Product Manual*, part number C1500-90950). The device driver and interface driver do not modify the command buffer. It is your responsibility to ensure that the format of the command request is correct. If the command request format is not correct, an error message appears.

A Z-write call sends the specified command along with the data in the user buffer. A Z-read sends the specified command, then reads the response from the device.

The *COMMANDLN* parameter specifies the length of the Command Descriptor Block sent with Z-Buffer calls in bytes or words. This parameter is used only in Z-read and Z-write calls. The parameter's value equals the number of words in the command.

PARM1 is an optional parameter used only in Control requests (not in read or write requests). This parameter contains data specific to a particular control command. The parameters you can specify with each control command are described with the control commands.

Control Commands

You specify the control commands described in this section as the second parameter of a control request. The subfunction bits in the control word (see the section titled "DDQ24 Driver Read, Write and Control Calling Sequences" in this chapter) identify the control commands. All control requests have the same format:

```
call exec(3,cntwd,[parm1])
```

where *3* indicates that the call is a control call (not a read or write call), and *cntwd* is the control command (see subfunction bits 11 through 6 in the Control Word Bits description in this chapter). The parameter *[parm1]* is an optional parameter. Some control commands do not have any parameters.

The following paragraphs describe each control command in detail.

Control 0B Rewind
Control 4B Rewind

These two commands are exactly the same. Both of these rewind commands rewind the tape drive, but leave the tape online and loaded. There are no parameters to use with these commands.

The calls for control commands 0B and 4B, respectively, are as follows:

call Exec (3,000B + lu) No parameters
call Exec (3,400B + lu) No parameters

For example, if you want to rewind the tape on a device that has LU number 5, using the 4B Rewind command, you execute the following call:

```
call exec(3,405B)
```

The "3" denotes that the call is a control command, and the "405B" is 400B (the octal control command designation) plus 5B (the LU number).

Control 1B Write File Mark

This command writes one or more file marks to the tape at the current tape location. It has one optional parameter, which indicates the number of file marks to write at the particular location.

The call for control command 1B is:

call Exec (3,100B + lu,[number_filemarks])

where the optional parameter *[number_filemarks]* is a positive integer that indicates the number of file marks to write at the current tape location. If you do not use this parameter, the default number of file marks is one (1). If you enter zero in this field, the driver converts it to a one.

For example, if you want to write three file marks to identify the current location on a tape on LU 20B, you execute the following call:

```
call exec(3,120B,3)
```

The first "3" denotes that the call is a control command, the "120B" is 100B (the octal control command designation) plus 20B (the LU number), and the second "3" specifies three file marks.

You may wish to write more than one file mark at a location in order to discriminate between different marked locations on the tape.

Note that this command sets the end of file bit (bit 7 in DVT 6), to write the file mark. For more information on this, see the section titled "Status" in this chapter.

Control 2B Backward Space Record

This command rewinds the tape one or more records from the current tape location. It has one optional parameter to specify the number of records to rebind.

The call for control command 2B is:

```
call exec(3,200B + lu,[num_records])
```

where the optional parameter *[num_records]* is a positive integer that indicates the number of records to rewind. If you do not use this parameter, the default number of records to rewind is one (1). If you enter zero in this field, the driver converts it to a one.

For example, if you want to rewind six records from the current location on a tape on LU 7B, you execute the following call:

```
call exec(3,207B,6)
```

where "3" denotes that the call is a control command, "207B" is 200B (the octal control command designation) plus 7B (the LU number), and "6" is the number of records to rewind.

Control 3B Forward Space Record

This command forwards the tape one or more records from the current tape location. It has one optional parameter to specify the number of records to forward.

The call for control command 3B is:

```
call exec(3,300B + lu,[num_records])
```

where the optional parameter *[num_records]* is a positive integer that indicates the number of records to forward. If you do not use this parameter, the default number of records to forward is one (1). If you enter zero in this field, the driver converts it to a one.

For example, if you want to go forward nine records from the current location on a tape on LU 3B, you execute the following call:

```
call exec(3,303B,9)
```

where "3" denotes that the call is a control command, "303B" is 300B (the octal control command designation) plus 3B (the LU number), and "9" is the number of records to forward.

Control 5B Rewind & Unload Tape

This command rewinds the tape drive and unloads the tape. There are no parameters to use with this command.

The call for control command 5B is as follows:

call Exec (3,500B + lu) No parameters

For example, if you want to rewind and unload the tape on a device that has LU number 6, you execute the following call:

```
call exec(3,506B)
```

The "3" denotes that the call is a control command, and the "506B" is 500B (the octal control command designation) plus 6B (the LU number).

Control 6B Dynamic Status

This command returns the status of the specified LU, extended transaction status and error codes. Status is returned in DVT 6 and DVT 16 through DVT 19 (refer to the section titled "Status" in this chapter for more information).

The calls for control command 6B are as follows:

call exec(3,600B + lu)
call abreg(a,b)
call rmpar(parms)

The first call is the command call, which specifies the command and LU. The second call is to get the A and B Registers, and the third call is to get the RAM parameters.

For detailed information about the A and B Registers and the RMPAR command and its parameters, refer to the *RTE-A Programmer's Reference Manual*, part number 92077-90007.

Control 7B Write Set Mark

This command writes one or more set marks to the tape at the current tape location. It has one optional parameter, which indicates the number of set marks to write at the particular location.

The call for control command 7B is:

call Exec (3,700B + lu,[number_setmarks])

where the optional parameter *[number_setmarks]* is a positive integer that indicates the number of set marks to write at the current tape location. If you do not use this parameter, the default number of set marks is one (1). If you enter zero in this field, the driver converts it to a one.

For example, if you want to write two set marks to identify the current location on a tape on LU 5B, you execute the following call:

```
call exec(3,705B,2)
```

The first "3" denotes that the call is a control command, the "705B" is 700B (the octal control command designation) plus 5B (the LU number), and the "2" specifies three set marks.

You may wish to write more than one set mark at a location in order to discriminate between different marked locations on the tape.

Note that this command sets the end of file bit (bit 7 in DVT 6), to write the set mark. For more information on this, see the section titled "Status" in this chapter.

Control 10B Backward Space Set Mark

This command rewinds the tape one or more set marks from the current tape location. It has one optional parameter to specify the number of set marks to rewind.

The call for control command 10B is:

```
call exec(3,1000B + lu,[num_setmarks])
```

where the optional parameter *[num_setmarks]* is a positive integer that indicates the number of set marks to rewind. If you do not use this parameter, the default number of set marks to rewind is one (1). If you enter zero in this field, the driver converts it to a one.

For example, if you want to rewind two set marks from the current location on a tape on LU 3B, you execute the following call:

```
call exec(3,1003B,2)
```

where "3" denotes that the call is a control command, "1003B" is 1000B (the octal control command designation) plus 3B (the LU number), and "2" is the number of set marks to rewind.

Control 11B Forward Space Set Marks

This command forwards the tape one or more set marks from the current tape location. It has one optional parameter to specify the number of set marks to forward.

The call for control command 11B is:

```
call exec(3,1100B + lu,[num_setmarks])
```

where the optional parameter *[num_setmarks]* is a positive integer that indicates the number of set marks to forward. If you do not use this parameter, the default number of set marks to forward is one (1). If you enter zero in this field, the driver converts it to a one.

For example, if you want to go forward four set marks from the current location on a tape on LU 6B, you execute the following call:

```
call exec(3,1106B,4)
```

where "3" denotes that the call is a control command, "1106B" is 1100B (the octal control command designation) plus 6B (the LU number), and "4" is the number of set marks to forward.

Control 13B Forward Space File

This command forwards the tape one or more files from the current tape location. It has one optional parameter to specify the number of files to forward.

The call for control command 13B is:

```
call exec(3,1300B + lu,[num_files])
```

where the optional parameter *[num_files]* is a positive integer that indicates the number of files to forward. If you do not use this parameter, the default number of files to forward is one (1). If you enter zero in this field, the driver converts it to a one.

For example, if you want to go forward eight files from the current location on a tape on LU 9B, you execute the following call:

```
call exec(3,1309B,8)
```

where "3" denotes that the call is a control command, "1309B" is 1300B (the octal control command designation) plus 9B (the LU number), and "8" is the number of files to forward.

Control 14B Backward Space File

This command rewinds the tape one or more files from the current tape location. It has one optional parameter to specify the number of files to rewind.

The call for control command 14B is:

```
call exec(3,1400B + lu,[num_files])
```

where the optional parameter *[num_files]* is a positive integer that indicates the number of files to rewind. If you do not use this parameter, the default number of files to rewind is one (1). If you enter zero in this field, the driver converts it to a one.

For example, if you want to rewind six files from the current location on a tape on LU 7B, you execute the following call:

```
call exec(3,1407B,6)
```

where "3" denotes that the call is a control command, "1407B" is 1400B (the octal control command designation) plus 7B (the LU number), and "6" is the number of files to rewind.

Status

DVT (Device Table) word 6 and DVT words 16 through 19 contain various types of status:

- DVT word 6 returns the LU status.
- DVT word 16 returns DDQ24 driver errors.
- DVT word 17 returns the length of the transferred data (the transmission log).
- DVT word 18 returns extended transaction status.
- DVT word 19 returns both sense code and additional sense code.

For more detailed information about status and status calls, refer to the *RTE-A Programmer's Reference Manual*, part number 92077-90007.

Logical Unit Status (DVT Word 6)

DVT word 6 contains the LU's status. LU status is returned in the A-Register after any request call, or when a Status request asks for it. The DVT word 6 bits have the following functions:

DVT word 6 Bits:															
15	14	13	12	11	10	9	8	7	6	5	4	3	2	1	0
AV		Device type = 24B						EOF	DB	EOT	BOT		WP	OF	E

15 to 14 AV These two bits determine the availability of the tape device.

0 = Driver is free to process a new request
1 = Driver or user has set down the device
2 = Driver currently processing I/O request
3 = Device is down, but busy with a request (this normally occurs only when you down an active device).

13 to 8 These bits set the device type. During system generation, this is set to 24B.

7 EOF This is the end of file bit, which the driver sets when a request causes it to sense an EOF mark.

6 DB DB stands for device busy. If set, it indicates that the device is performing a function that prevents other operations from beginning (for example, a tape rewind).

5 EOT EOT stands for end of tape. The driver sets this bit when the drive senses that the tape is positioned beyond the EOT mark.

4 BOT BOT stands for beginning of tape. The driver sets this bit when the tape is positioned at the BOT mark.

2	WP	If set, this bit indicates that the tape is write protected.
1	OF	If set, this bit indicates that the drive is off line.
0	E	This bit is an error indicator. The system sets this bit if there is an error code in DVT word 16.

Driver Error (DVT Word 16)

DVT word 16 bits 5 through 0 (zero) contain error codes for the DDQ24 device driver. The error codes are as follows:

Dec.	Octal		Error and Solution
0	0B	=	Normal request completion.
1	1B	=	Illegal request. Check the syntax of your EXEC request call. The EXEC call could have illegal parameters or specify an unused LU or an unimplemented command. Retry the request after you check it.
2	2B	=	Device not ready. The drive is offline, but media is present in the drive. If this occurs, first try unloading, then reloading the tape. Second, send a SCSI Command Descriptor Block (CDB) to load the tape. If this does not work, make sure that the device is correctly connected, not busy, and correctly generated into the system.
3	3B	=	Device timeout. Use the TO command to increase the timeout period.
6	6B	=	Device write protected. Remove the tape's write protection.
7	7B	=	Address error. Ensure that the SCSI address is correct.
10	12B	=	Tape fault. Check the tape for any problems.
12	14B	=	Insufficient driver table space generated. Generate more driver table space.
21	25B	=	Medium is not present. Insert the medium into the drive.
22	26B	=	Incompatible cartridge. Use the correct type of tape cartridge.
23	27B	=	Positioning error detected. First try ejecting, then reloading the tape. If this does not solve the error, a hardware error is indicated.
24	30B	=	Hardware error. Check all connections, make sure that tape drive is functioning correctly.
25	31B	=	Unknown error. This message should not appear. If it does, decode the error by checking DVT 19, which contains specific SCSI error codes.

Dec.	Octal		Error and Solution
26	32B	=	End of Data.
27	33B	=	Drive is offline or tape is unloading. Check the tape device.
63	77B	=	Driver retry request. This message can appear only if the Control Word user error bit (UE bit 13) is set. Control Word bit 13 enables the user to interpret errors and take action on them, instead of allowing the system to handle errors. If you receive this message, check your request's syntax and try the request again.

All codes of 28 decimal (34B octal) or higher are interface driver error codes, except for 63 (77B), which indicates a driver retry request.

DVT Word 17

DVT word 17 contains the transmission log, which is the length of the data transferred.

Extended Transaction Status (DVT Word 18)

DVT word 18 contains the extended transaction status of device driver DDQ24. The SCSI device reports these errors, which are converted to an error code. The error codes have the following meanings:

0 = No error.
1 = SCSI error. Check the sense code and additional sense code to identify the specific error.
2 = Selection/reselection timeout. Check to ensure that the device address is correct.
3 = Data Error. This indicates a hardware error.
4 = Bus parity error. This indicates a hardware error.
5 = Reset
6 = Illegal bus free. This indicates a hardware error.
7 = Abort request. The driver has sent an abort request.
8 = Illegal request. This indicates an illegal script type.
9 = Firmware error.

Sense Code and Additional Sense Code (DVT Word 19)

DVT word 19 contains the sense code and additional sense code. Appendix A in this manual describes DVT word 19 and gives an example program to access it. The sense code is returned in the first byte (bits 0 through 7) and the additional sense code is returned in the second byte (bits 8 through 15).

DDQ24 Driver Communication Word (DVT Word 20)

DDQ24 Driver Communication Word (DVT Word 20)																
	15	14	13	12	11	10	9	8	7	6	5	4	3	2	1	0
DVT 20	I	X	S	X	X	1	R	R	D	P	DVT priority					

I = Initial flag. This bit is set by the generator, then cleared on the first entry to the driver.
D = Delay. This bit is set if the driver is delaying and the next timeout is expected.
R = Retry. This is the retry counter. It counts up to three retries if the device is busy.
P = Powerfail Retry. During a power fail, a protocol failure may occur. This bit is during the second attempt at the I/O request.
S = Serial bit. This bit is set to 1 (one) to indicate that this is a Serial device, not a block device.

Disk Device Driver DDQ30

The following sections describe disk device driver DDQ30, including Read/Write request calls and Z buffer calls.

DDQ30 Read and Write Calls

The calling sequences for the DDQ30 read and write requests are as follows:

Read request: CALL EXEC(1,CNTWD,BUFR,BUFLN,TRACK,SECTOR)
Write request: CALL EXEC(2,CNTWD,BUFR,BUFLN,TRACK,SECTOR)

The following paragraphs define the read and write call parameters:

BUFR: Buffer address, any legal value as enforced by the operating system.

Control Word Bits:															
15	14	13	12	11	10	9	8	7	6	5	4	3	2	1	0
BB	NB	UE	Z	SubFunction						Logical Unit Number					

Comments on bit groups:

15 BB — Driver bypass bit to allow the interface driver to be called directly. We strongly recommend that you *do not do this* unless you are very sure that you know what you are doing. The DDQ30 driver translates the track and sector addresses into block addresses before sending those addresses to the interface driver IDQ35. This is necessary because the SCSI standard uses block addresses, not track and sector addresses. In addition, DDQ30 adds an address offset that corresponds with the logical disk address offset. If you bypass DDQ30 and communicate directly with the interface driver, the track and sector to block address translation does not occur. Also, the address offset is not added. In other words, you would be talking to the disk in "raw" (bit by bit) mode. Again, we recommend that you do not bypass DDQ30 to talk directly to the interface driver.

14 NB — No buffer bit to inhibit output buffering. No effect on driver.

13 UE — User error handling. No effect on driver.

12 Z — Dual buffer bit. 0 = normal read or write; For Z bit = 1 see the section titled "Z Buffer Calls" in this chapter.

11 to 6 — Subfunction -- Read or Write subfunction.

The SCSI driver supports the following subfunctions on read and write calls:

Octal Value	Definition
0	Normal read/write
1..37	Rejected (Illegal subfunction)
40	Issue request without timeout
41..76	Rejected (Illegal subfunction)
77	Normal read/write

5 to 0 — Logical Unit Number. Used by RTE to translate to a Device Table (DVT); not passed to the driver.

BUFLN: The request length specifying the number of words or bytes to be transferred. Positive values indicate the number of words and negative values indicate the number of bytes, except for the special case of -32768 (100000b), which indicates 32768 words. HP recommends that you use values that are a multiple of 128 words (256 bytes), because the disk driver always writes a complete block of 128 words. If you request a lesser value, the rest of the sector is written with whatever data that happens to follow the requested buffer.

TRACK: The track address where the data is stored. The range of values acceptable to the driver is 0..65535, limited by the size of the disk for which the call is intended.

SECTOR: The sector address where the data is stored. For backward compatibility, sectors are defined as 64 words each, even though the driver works with blocks 128 words long. The driver rejects calls that start on an odd sector boundary. The range of values acceptable to the driver is even numbers from 0 through 254 inclusive, limited by the size of the disk for which the call is intended.

Note that this is larger than the 7-bit field currently supported by the FMP routines.

The length of the request plus the starting address as given by the track and sector values must remain within the defined size of the disk. With the given limits, the maximum disk size is (2**16)*(2**8)*(2**7) = 2**31 bytes = 2.146 gigabytes.

Z Buffer Calls

The Z buffer is used to construct bus transactions that are outside the range of the usual read and write transfers, such as disk formatting requests.

When the Z bit (bit 12) is set, the form of the EXEC call changes to:

Read request: CALL EXEC(1,CNTWD,BUFR,BUFLN,ZBUF,ZLEN)
Write request: CALL EXEC(2,CNTWD,BUFR,BUFLN,ZBUF,ZLEN)

The ZBUF and ZLEN parameters describe a user Z buffer. The driver places no restrictions on the content of the Z buffer or the data buffer. The concept of track and sector does not apply to these calls.

Driver Parameter Table Use in DDQ30

Driver Parameter Table usage in DDQ30

	15	14	13	12	11	10	9	8	7	6	5	4	3	2	1	0
DVP 01	Reserved, set to 0													SCSI Addr		
DVP 02	Reserved, set to 0					Unit No.			Reserved, set to 0							
DVP 03	Reserved, set to 0															
DVP 04	High Order word of starting block number															
DPV 05	Low order word of starting block number															
DVP 06	Number of Tracks on LU															
DVP 07	Reserved, set to 0								# of RTE blocks/tracks							
DVP 08	S	E	Reserved												BF	

S = 1 if driver should manage spin-up and spin-down
E = 1 eject disk on last dismount

BF = Blocking factor minus 1:
0 = 256 bytes/sector
1 = 512 bytes/sector
2 = 768 bytes/sector
3 = 1024 bytes/sector

DDQ30 Driver Communication Word (DVT Word 20)

DDQ30 Driver Communication Word (DVT Word 20)																
	15	14	13	12	11	10	9	8	7	6	5	4	3	2	1	0
DVT 20	I	L	0	M	S	1	R	R	D	P	DVT priority					

I	= Initial Flag	Set by generator, cleared on first entry to driver.
L	= Locked	Eject button has been disabled.
M	= Mount	Set if disk has been mounted.
S	= Spinning	Set if disk is spinning.
R	= Retry Counter	Counts up to three retries if the disk is busy.
D	= Delay	Set if driver is delaying, next timeout is expected.
P	= Powerfail Retry	During powerfail, a protocol failure may occur. This bit is set during the second attempt at an I/O request.

Interface Driver IDQ35

Users should not call the SCSI interface driver directly. By the time the device driver calls the interface driver, the device driver has transformed the DVT to the following format for normal read and write requests (Z buffer requests are passed through unchanged):

Device Driver DVT Transformation																
	15	14	13	12	11	10	9	8	7	6	5	4	3	2	1	0
DVT 15	Type		UE	Z	Subfunction						x	x	L	UD	Req *	
DVT 16	0	Request buffer address														
DVT 17	Request length															
DVT 18	High order word of block address for the transfer															
DVT 19	Low order word of block address for the transfer															
DVT 20	I	?	S	?	?	1	?	?	?	?	?					

* Request Code

? = Driver dependent bit. This bit depends on the device driver (see the descriptions of DVT word 20 for each of the device drivers in this Chapter to obtain more information).

I	= Initial Flag	Set by generator, cleared on first entry to driver.
S	= Serial Bit	If set (= 1), this bit indicates that the device is a Serial device. If this bit is not set (= 0), the device is a block device.

Bit 10 of DVT 20 is set to 1 on all calls to the SCSI bus. This bit is 0 for calls from DDC00.

Next, the interface driver performs the requested I/O to the interface card. At the completion of the request, the status is stored in the DVT in the following format:

DVT STATUS:																
	15	14	13	12	11	10	9	8	7	6	5	4	3	2	1	0
DVT 6	AV		Driver type = 30B						Driver status							
DVT 15	Type		UE	Z	Subfunction						x	x	L	UD	Req *	
DVT 16	Error code															
DVT 17	Transmission log															
DVT 18	Extended status #1 Transaction status															
DVT 19	Extended status #2 SCSI status															
DVT 20	I	?	S	?	?	1	?	?	?	?	?					

* Request Code

? = Driver dependent bit. This bit depends on the device driver (see the descriptions of DVT word 20 for each of the device drivers in this Chapter to obtain more information).

I = Initial Flag — Set by generator, cleared on first entry to driver.

S = Serial Bit — If set (= 1), this bit indicates that the device is a Serial device. If this bit is not set (= 0), the device is a block device.

A

Error Messages

Errors can come from the rewritable disk drive, the interface driver or the device drivers. This appendix lists the possible error messages by place of origin to help you find the message and what to do about it. The first part of the appendix covers error messages from the device drivers. The second part describes interface driver errors and the last part describes device-specific errors.

Tape Device Driver (DDQ24) Errors

Driver Error (DVT Word 16)

DVT word 16 bits 5 through 0 (zero) contain error codes for the DDQ24 device driver. The error codes are as follows:

Dec.	Octal		Error and Solution
0	0B	=	Normal request completion.
1	1B	=	Illegal request. Check the syntax of your EXEC request call. The EXEC call could have illegal parameters or specify an unused LU or an unimplemented command. Retry the request after you check it.
2	2B	=	Device not ready. The drive is offline, but media is present in the drive. If this occurs, first try unloading, then reloading the tape. Second, send a SCSI Command Descriptor Block (CDB) to load the tape. If this does not work, make sure that the device is correctly connected, not busy, and correctly generated into the system.
3	3B	=	Device timeout. Use the TO command to increase the timeout period.
6	6B	=	Device write protected. Remove the tape's write protection.
7	7B	=	Address error. Ensure that the SCSI address is correct.

Dec.	Octal		Error and Solution
10	12B	=	Tape fault. Check the tape for any problems.
12	14B	=	Insufficient driver table space generated. Generate more driver table space.
21	25B	=	Medium is not present. Insert the medium into the drive.
22	26B	=	Incompatible cartridge. Use the correct type of tape cartridge.
23	27B	=	Positioning error detected. First try ejecting, then reloading the tape. If this does not solve the error, a hardware error is indicated.
24	30B	=	Hardware error. Check all connections, make sure that tape drive is functioning correctly.
25	31B	=	Unknown error. This message should not appear. If it does, decode the error by checking DVT 19, which contains specific SCSI error codes.
26	32B	=	End of Data.
27	33B	=	Drive is offline or tape is unloading. Check the tape device.
63	77B	=	Driver retry request. This message can appear only if the Control Word user error bit (UE bit 13) is set. Control Word bit 13 enables the user to interpret errors and take action on them, instead of allowing the system to handle errors. If you receive this message, check your request's syntax and try the request again.

All codes of 28 decimal (34B octal) or higher are interface driver error codes, except for 63 (77B), which indicates a driver retry request.

DVT Word 17

DVT word 17 contains the transmission log, which is the length of the data transferred.

Extended Transaction Status (DVT Word 18)

DVT word 18 contains the extended transaction status of device driver DDQ24. The SCSI device reports these errors, which are converted to an error code. The error codes have the following meanings:

0 = No error.
1 = SCSI error. Check the sense code and additional sense code to identify the specific error.
2 = Selection/reselection timeout. Check to ensure that the device address is correct.
3 = Data Error. This indicates a hardware error.
4 = Bus parity error. This indicates a hardware error.
5 = Reset.
6 = Illegal bus free. This indicates a hardware error.
7 = Abort request. The driver has sent an abort request.

8 = Illegal reqest. This indicates an illegal script type.
9 = Firmware error.

Disk Device Driver (DDQ30) Errors

The device driver generates the following errors, which are returned in bits 5 through 0 of $DVT 16. All error number values are decimal numbers.

Error: 1, illegal request. A track or sector address error has occurred.

Error: 2, device not ready. The device is not mounted. Mount the device and try again.

Error: 3, device timeout.

Error: 5, transmission error. Check extended status.

Error: 6, device write protect. Either remove the write protect from the current device or write to a different device.

Error: 7, address error. Check the address on the device and compare it to the generation record's address.

Error: 10, disk fault. Format the disk.

Error: 12, insufficient driver table space generated. Regenerate the system.

Error: 21, no disk in drive.

Error: 22, incompatible cartridge. Change cartridges.

Error: 23, medium uninitialized or format corrupted. Format the disk.

Error: 24, no spares available. Replace the disk.

Error: 25, automatic reallocation failed.

Error: 26, defect list update failed. This is not implemented with our format.

Error: 27, defect list not available. This is not implemented with our format.

Error: 29, illegal logical block address.

Error: 62, device busy.

Interface Driver (IDQ35) Errors

The error descriptions in this section list the error number and the type of error, then provide a description of the error and a solution to the error. All error number values are decimal numbers. Interface driver IDQ35 can produce the following errors:

Error: 1, driver rejected call. This error indicates illegal subfunction bits.

Solution: Check your user program and make sure that the EXEC call is correct.

Error: 12, generation error. This error indicates that the number of IFT extension words was not sufficient.

Solution: Correct the answer file so that the interface table contains the correct number of extension words (see Chapter Three under the heading "Create A New Answer File"), then regenerate the system.

Error: 28, driver defined error. This indicates a protocol failure. The SCSI Card returned a response that the driver was not expecting.

Solution: Reboot the system. If the problem persists, there may be a SCSI Card hardware failure.

Error: 40, driver defined error. This error message can occur for three reasons. Either the TERMPWR switch is not enabled, the SCSI Card fuse is open, or the SCSI cable is not attached.

Solution: Check the TERMPWR switch to ensure that TERMPWR is enabled (switch 2 on switch SW1 should be closed to enable TERMPWR; see Chapter Two under the heading "Setting Switch SW1" for a detailed description of this switch). Make sure that the SCSI cable is firmly seated. Check the SCSI Card fuse (see Figure 2-2 in Chapter Two for a diagram of the card layout); if the fuse is open, replace it with the spare fuse provided with the SCSI product.

Error: 41, driver defined error. This message indicates that the first call to the SCSI Card went directly to the interface driver (IDQ35), bypassing the device driver (DDQ30). This is not allowed, because the device driver's LU setup must be done before the first call to the interface driver.

Solution: Reboot the system. Do not bypass the device driver until after the first normal call.

Error: 42, driver defined error. The SCSI Card address is the same as the SCSI device address.

Solution: The addresses of the SCSI Card and its devices must be unique. Define different addresses for the SCSI Card and each device.

Error: 43, driver defined error. The SCSI address is incorrect, or no device on the SCSI bus responded to the SCSI address received from DVP (Driver Parameter) 1.

Solution: Make sure that all devices are connected and turned on. Check all address switches on the devices. Check the answer file for correct DVT (Driver Table) entry for driver parameter one.

Error: 44, driver defined error. Incorrect length for CDB (Command Descriptor Block) in Zbuffer call or illegal CDB type (per SCSI-II standard).

Solution: Check the user program and make sure that the Z-buffer format is correct.

Error: 45, driver defined error. The revision level of the interface driver and the SCSI Card firmware are incompatible with each other. This means that either the interface driver was changed to a revision incompatible with the SCSI Card firmware, or the SCSI Card firmware was changed to a revision incompatible with the interface driver.

Solution: Ensure that the interface driver and SCSI Card firmware revisions are compatible with each other.

Optical Disk Drive Errors

The Optical Disk Drive generates two types of extended status error messages. The first type, sense key, provides general error information. The second type, additional sense code, provides more detailed information about the error. Both of these codes are contained in DVT word 19.

You can get these messages by calling RMPAR as described in the *RTE-A Programmer's Reference Manual*, part number 92077-90007.

The following program segment is an example of a RMPAR call in FORTRAN to retrieve the extended status:

```
      Integer*2         ExtendedStatus(0:4)
*
      CALL EXEC(1,DISKLU,DBUF,DLEN,TRACK,SECTOR)
      CALL ABREG(STATUS,TLOG)
      CALL RMPAR(EXTENDEDSTATUS)
```

The format of extended status (3) in DVT 19 is as follows:

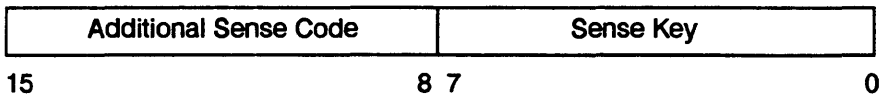

Sense Keys

The sense key error messages provide general error information. They are contained in the lower byte (0-7) of DVT word 19. All error number values are decimal numbers.

0 NO SENSE. This indicates that there is no specific sense key information to report for the designated logical unit. The 0 sense key is returned when the command completed successfully.

1 RECOVERED ERROR. This shows that the last command completed successfully with some recovery action performed by the target.

2 NOT READY. This indicates that the logical unit cannot be accessed. Check if the LU is correctly connected, and that the power is on.

3 MEDIUM ERROR. The command terminated with an unrecovered error condition caused by a medium defect. Check to see if the disk has been formatted or try another disk.

4 HARDWARE ERROR. The controller detected a hardware error. This indicates a possible problem with the 650/A Magneto Optical Drive.

5 ILLEGAL REQUEST. The command descriptor block or the additional command parameters (supplied as data for some commands) contained an illegal parameter. Check the EXEC call to make sure that the parameters are correct.

6 UNIT ATTENTION. The medium has been loaded, the unit has been reset, or the Mode Select parameters have been changed. Retry the request. If several retries fail, a possible problem with the 650/A Magneto Optical Drive is indicated.

7 DATA PROTECT. The Write Protect condition of the medium cartridge switch cannot perform a command to write the medium (that is, the medium is write protected). Write to a medium that is not write protected.

10 COPY ABORTED. An error condition on the source device, the destination device, or both, caused a COPY or a COPY AND VERIFY command to abort. This indicates a possible problem with the 650/A Magneto Optical Drive.

Additional Sense Code

The additional sense code error messages provide detailed error information. They are contained in the higher byte (bits 8 through 15) of DVT word 19. All error number values are decimal numbers.

0 No Additional Sense Information (NO SENSE).

There is no error to report.

2 No ESDI Command Complete (HARDWARE ERROR).

The drive unit did not return the ESDI command complete. This indicates a possible problem with the 650/A Magneto Optical Drive.

3 Write Fault (HARDWARE ERROR).

The write command failed. The logical block address where the fault was detected may be returned in the Logical Block Address field or information Byte field of the sense data. Make sure that the media you are trying to write is not write protected.

4 Drive Not Ready (NOT READY).

The READY signal of ESDI was negated. Make sure that the medium is fully inserted in the drive, that the drive unit spins up and that the focus or slide servo is unlocked.

5 Drive Not Selected (NOT READY).

The drive unit is not selected. This indicates a possible problem with the 650/A Magneto Optical Drive.

7 Multiple Drives Selected (HARDWARE ERROR).

More than one drive responded for the same drive number. This indicates a possible problem with the 650/A Magneto Optical Drive.

8 Logical Unit Communication Failure (HARDWARE ERROR).

An error was detected during the communication between the drive unit and the controller unit (for example, a parity error). This indicates a possible problem with the 650/A Magneto Optical Drive.

9 Track Following Error (HARDWARE ERROR).

Still-jump failed and the optical disk's head could not stay on the same track. This indicates a possible problem with the 650/A Magneto Optical Drive.

10 No Disk (NOT READY).

Medium not inserted into the drive unit. Make sure that there is a medium and that it is fully inserted into the drive.

11 Load/Unload Failure (HARDWARE ERROR).

A failure was detected during loading or unloading the cartridge. This indicates a possible problem with the 650/A Magneto Optical Drive.

12 Spindle Failure (HARDWARE ERROR).

The spindle servo did not lock with the reference signal and the medium did not rotate correctly. This indicates a possible problem with the 650/A Magneto Optical Drive.

13 Focus Failure. (HARDWARE ERROR).

The focus servo was missed. Issue a START/STOP UNIT command with its Start bit set to one (1) to restart the drive. If this fails, a possible problem with the 650/A Magneto Optical Drive is indicated.

14 Tracking Failure. (HARDWARE ERROR).

Tracking servo could not be locked. This indicates a possible problem with the 650/A Magneto Optical Drive.

15 Drive Initialization Failure (HARDWARE ERROR).

The drive's power on diagnostics failed. This indicates a possible problem with the 650/A Magneto Optical Drive.

16 ID CRC Error (HARDWARE ERROR).

The controller detected the error of ID cyclic check code transferred from the drive unit. This indicates a possible problem with the 650/A Magneto Optical Drive.

17 Unrecovered Read Error Of Data Blocks (MEDIUM ERROR).

The error correction code could not correct the data errors. The logical block address where the fault was detected may be returned in the Logical Block Address field or information Byte field of the sense data. To correct this error, replace the medium. If this error persists, a problem with the 650/A Magneto Optical Drive may exist.

21 Seek Positioning Error (HARDWARE ERROR).

The seek to the specified track failed after retrials. To correct this error, replace the medium. If this error persists, a problem with the 650/A Magneto Optical Drive may exist.

24 Recovered Read Data With ECC Procedure (RECOVERED ERROR).

There was an interleave that contained seven or eight byte errors. The error correction succeeded. This indicates a possible problem with the 650/A Magneto Optical Drive.

32 Invalid Command Operation Code (ILLEGAL REQUEST).

The specified command operation code is not implemented. This indicates a possible problem with the 650/A Magneto Optical Drive.

33 Illegal Logical Block Address (ILLEGAL REQUEST).

The specified logical block address was outside the valid area. This indicates a possible problem with the 650/A Magneto Optical Drive.

35 Illegal Function For Medium Type (ILLEGAL REQUEST).

The format parameter is invalid for the medium type. This indicates a possible problem with the 650/A Magneto Optical Drive.

36 Illegal Field In CDB (ILLEGAL REQUEST).

The received Command Descriptor Block (CDB) contained an error. This Additional Sense Code is returned in the following situations:

- Reserved field in CDB is not zero.
- Invalid combination of parameters. For example, both the eject bit and the start bit are set in the START/STOP UNIT command.
- Illegal parameter at that state. For example, a command using the relative address (RelAdr) bit set to one (1) is issued after the command whose link bit is not set to one. This indicates a possible problem with the 650/A Magneto Optical Drive.

37 Invalid LUN (ILLEGAL REQUEST).

LUN 2 through 7 is specified or the specified LUN (0 or 1) does not respond to the selection from the controller unit. This indicates a possible problem with the 650/A Magneto Optical Drive.

38 Invalid Field in Parameter List (ILLEGAL REQUEST).

The received parameters contained an error. This indicates a possible problem with the 650/A Magneto Optical Drive.

39 Write Protected (DATA PROTECT).

Erasing or writing was aborted because the write protect switch of the cartridge is on. Either switch the write protect on the cartridge off or change the media.

40 Medium Changed (UNIT ATTENTION).

The medium was loaded. The Additional Sense Code notifies the initiator that the medium has been changed since the execution of the last command. This code implies Mode Select Parameters changed (Additional Sense Code message 42). This indicates a possible problem with the 650/A Magneto Optical Drive.

41 Power On or Reset or Bus Device Reset Occurred (UNIT ATTENTION).

This message notifies the initiator that the reset condition has happened since the last command. This code implies that Mode Select Parameters changed (Additional Sense Code 42). This indicates a possible problem with the 650/A Magneto Optical Drive.

42 Mode Select Parameters Changed (UNIT ATTENTION).

This message notifies the initiator that the mode select parameters have been changed since the execution of the last command. This indicates a possible problem with the 650/A Magneto Optical Drive.

48 Incompatible Cartridge (MEDIUM ERROR).

The cartridge's ID hole is invalid. Change the cartridge to correct this error.

49 Medium Format Corrupted (MEDIUM ERROR).

PEP, SFP or the format information sector in the CDA is invalid. This indicates a possible problem with the 650/A Magneto Optical Drive.

50 No Defect Spare Location Available (MEDIUM ERROR).

The number of defect sectors listed in the PDL and SDL (DTA) exceeded 1024, or the number of defect sectors listed in the SDL exceeded the specified value calculated by the number of groups and spare blocks per group. This message means that the disk is defective and you should replace it.

56 Recovered with Automatic Reallocation (RECOVERED ERROR).

Automatic write reallocation executed successfully. This indicates a possible problem with the 650/A Magneto Optical Drive.

57 Automatic Reallocation Failure (MEDIUM ERROR).

Automatic write reallocation failed after retrying three times. This indicates a possible problem with the 650/A Magneto Optical Drive.

58 Defect List Update Failure (MEDIUM ERROR).

Attempt to update the defect table failed after the successful sparing of the data sector. This indicates a possible problem with the 650/A Magneto Optical Drive.

61 Defect List Not Available (MEDIUM ERROR or RECOVERED ERROR).

Specified defect list is not available. This indicates a possible problem with the 650/A Magneto Optical Drive.

66 Power On Diagnostic Failure (HARDWARE ERROR).

Power on diagnostic failed. This indicates a possible problem with the 650/A Magneto Optical Drive.

67 Message Reject Error (HARDWARE ERROR).

The command was aborted because the initiator rejected the message from the SMO-C501 by issuing a MESSAGE REJECT message. This indicates a possible problem with the 650/A Magneto Optical Drive.

68 Internal Controller Error (HARDWARE ERROR).

The controller detected an error related to the controller hardware or firmware. This indicates a possible problem with the 650/A Magneto Optical Drive.

71 SCSI Interface Parity Error (HARDWARE ERROR).

The command was aborted due to parity error of the SCSI bus. This indicates a possible problem with the 650/A Magneto Optical Drive.

72 Initiator Detected Error (HARDWARE ERROR).

The command was aborted because the initiator sent the INITIATOR DETECTED ERROR message. This indicates a possible problem with the 650/A Magneto Optical Drive.

Digital Audio Tape Drive Errors

The DAT Drive generates two types of extended status error messages. The first type, sense key, provides general error information. The second type, additional sense code, provides more detailed information about the error. Both of these codes are contained in DVT word 19.

You can get these messages by calling RMPAR as described in the *RTE-A Programmer's Reference Manual*, part number 92077-90007.

The following program segment is an example of a RMPAR call in FORTRAN to retrieve the extended status:

```
Integer*2          ExtendedStatus(0:4)

CALL EXEC(1,DISKLU,DBUF,DLEN,TRACK,SECTOR)
CALL ABREG(STATUS,TLOG)
CALL RMPAR(EXTENDEDSTATUS)
```

The format of extended status (3) in DVT 19 is as follows:

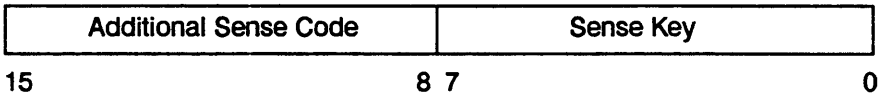

The error descriptions are split into three columns. The first column gives the Sense Key Code (bits 0 –7 of DVT 19), the second column gives the Additional Sense Code (bits 8 - 15 of DVT 19), and the third column contains a description of the error.

Sense Key	Add. Sense	Description
0H		NO SENSE
	00	This indicates that there is no specific sense key information to report for the designated logical unit. This normally indicates a successful command. This can also indicate the detection of a Filemark, an End-of-Partition/Media, a Save-Set Mark, a Beginning-of-Partition/Media, or an End-of-Data. These are not errors.
	0A	Error-rate warning.
	81	Humidity Warning.

Sense Key	Add. Sense	Descrpition
2H		DRIVE NOT READY
	04	This indicates that the drive is offline, but media is present in the drive. The drive returns this status for any commands that cause tape motion following an UNLOAD with the Immed bit set, or if the front panel EJECT button was pressed. The drive continues to return this status until the tape is physically ejected. The drive returns this status following a LOAD with the Immed bit set for any subsequent commands which would cause tape motion, until the tape is loaded. The drive contines to return this Sense information if the host previously executed a PREVENT MEDIA REMOVAL command followed by an UNLOAD. The host cannot perform any operation which would cause tape motion, such as Write, Read, Verify and Space commands. The host may load the tape when the unit is offline. The host may also execute any diagnostic commands which do not access the tape. This message can also indicate that the drive is in the process of becoming ready; in other words, the tape is being loaded.
	3A	Medium is not present. This is returned when in a quiescent state with no media in the drive, for all commands which would cause tape motion.
3H		MEDIUM ERROR
	00	Drive has encountered the physical EOP/M.
	0C	The drive has a write error where the RAW Retry Limit was exceeded. The non-recovered error condition was probably caused by a flaw in the tape or a dirty head. A hardware problem may cause this error, but it is most likely to be media-related.
	11	The drive had an unrecovered read error because of flaws in the meduim, which means that the sub-area was unreadable, or there were an excessive number of uncorrectable tracks.
	30	Incompatible Medium Installed or unknown format (audio) encountered. The drive cannot read or space along the tape because either a format violation was encountered or the format is unknown.
	3B	Positioning Error Detected. The drive either lost position during a Read, Verify or Space operation, or was not positioned at BOT for a Write Lead-In-Area operation.
	50	The drive had an error when appending new data during a write-type operation. It either could not find the end of the group, or could not write the new group successfully.

Sense Key	Add. Sense	Description
4H		HARDWARE ERROR
	03	A hardware failure occurred during a Write operation.
	09	A track-following hardware error occurred, generated by the servo/mechanism.
	44	The drive returns this error for all unexpected internal error conditions. It indicates that the drive detected a non-recoverable hardware failure while performing the command. The Sub-Assembly Code field will identify which sub-assembly is causing the error. If this field is zero, the host should issue a SEND DIAGNOSTIC command with the self-test bit set, to test the drive thoroughly and identify the failing component. It is also returned if the drive has a diagnostic failure. The SEND DIAGNOSTIC command generates a CHECK CONDITION status with this sense data set if the drive fails the requested diagnostic test or sequence. The RECEIVE DIAGNOSTICS RESULTS command provides further information.
	53	Media Load/Eject failed. The drive has been unable to complete its load sequence successfully. This may be due to mechanical problems, or because the drive could not successfully read and write from the test region of the tape.
	82	Moisture detected.
5H		ILLEGAL REQUEST
	1A	This indicates a parameter length error in the command descriptor block (the value requested does not fall on header, page or block descriptor boundaries), or that the Parameter List Length is too large for the specified command (the drive is not expecting so much data).
	20	Invalid command operation code.
	24	Invalid field in the command descriptor block. Either the field is not supported, or a reserved field was used illegally. The Sense Key Specific Bytes should be checked, as the Field Pointer bytes will identify the illegal bit or field.
	25	Logical Unit not supported. The LUNTRN field in the Identify message was not set to either 80H or C0H.
	26	This indicates an invalid test number, header or field in the Parameter List, or that the parameter page is not supported. The Sense Key Specific Bytes should be checked, as the Field Pointer bytes will identify the illegal bit or field.
	39	Invalid bits in the IDENTIFY message. The message was not set to either 80H or C0H

Sense Key	Add. Sense	Description
6H		UNIT ATTENTION
	28	Indicates that the tape may have been changed.
	29	The drive has had a reset, a Bus Device reset, or the drive failed its power-on self-test or diagnostics.
	2A	The Mode or Log parameters may have changed.
7H		WRITE-PROTECTED
	27	Indicates that a command that writes to the tape was attempted on a write-protected cartridge.
8H		BLANK CHECK
	00	Blank tape was encountered at BOT or EOD was encountered on a ready type of operation.
AH		COPY ABORTED
	00	Indicates that a COPY command was aborted due to an error condition on the source or the destination device.
	28	COPY cannot execute because the host cannot disconnect.
BH		ABORTED COMMAND
	00	Host aborted current command by sending an ABORT message.
	2C	The Phase sequence during command execution was not as expected.
	43	The Message phase indicated by the communicating device was not as expected by the drive.
	45	A SCSI Selection/Reselection error occurred.
	47	The drive detected a SCSI parity error and proceeded to the Status phase without completing execution of the command.
	48	The drive received an INITIATOR DETECTED ERROR message.
	49	The drive received an illegal message and proceeded to the Status phase without completing execution of the command.
	4A	The Command phase indicated by the communicating device was not as expected by the drive.
	4B	The Data phase indicated by the communicating device was not as expected by the drive. A DMA error could cause this report.
	4E	The host sent a new command to the drive while a previous command was executing.
DH		VOLUME OVERFLOW — unused.
	00	The drive encountered the physical EOP/M on a Write Filemark command.

B

Single-Ended Cable Pin to Signal List

Single-Ended Cable

Figure B-1 on the following page provides a pin to signal list for the single-ended (standard) cable.

Notes for Figure B-1:

1. Connector A = 80 pin Connector B = 50 pin
2. TERMPWR pins provide 4.5 V at .5 amps for SCSI bus terminator power. This line is designed to drive the external bus terminator. It is not intended for general use.

Terminator Power

Figures B-1 and C-1 show the assignment of terminator power pins on the single-ended and differential cable connectors. Either the SCSI Card or a peripheral device can supply terminator power. If terminator power comes from the SCSI Card, it is not applied until the cable connector hood is properly connected. The SCSI cable has a built-in interlock that tells the SCSI Card to enable TERMPWR to the terminators when it is connected, unless TERMPWR comes from a device. For a description of how to enable and disable terminator power on the SCSI Card, see the description of switch SW1-2 in Chapter Two under the heading "Setting Switch SW1".

SCSI Card TERMPWR is designed to supply the power to the termination network at each end of the cable. The termination network at the computer end is integrated onto the card. The power available to the user is greater than 4.5 volts at up to .5 amps.

NOTE

Only *one* device on the SCSI bus should supply TERMPWR.

Figure B-1. Single-Ended Cable Pin to Signal List

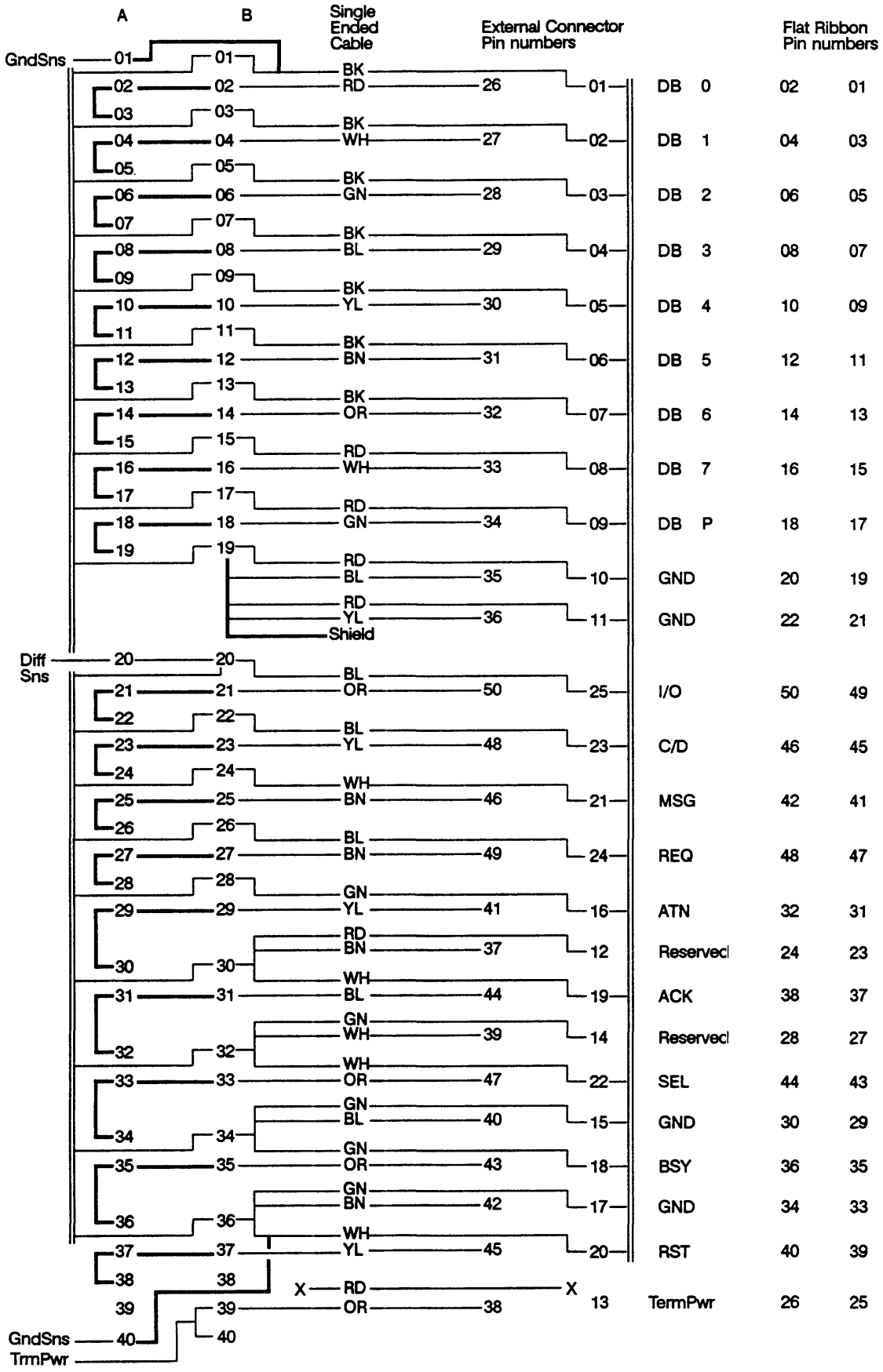

C

Differential Cable Pin to Signal List

Differential Cable

Figure C-1 on the following page provides a pin to signal list for the differential cable (option 001).

Notes for figure C-1:

1. TERMPWR pins provide 4.5 V at .5 amps for SCSI bus terminator power.
2. Connector A = 80 pin Connector B = 50 pin

CAUTION

Make certain that the power is turned off when you connect the cables to the SCSI product and all peripherals, to prevent shorting the TERMPWR pins to the equipment. The TERMPWR pins carry live voltage. Failure to turn off the power will result in damage to the equipment.

Terminator Power

Figures B-1 and C-1 show the assignment of terminator power pins on the single-ended and differential cable connectors. Either the SCSI Card or a peripheral device can supply terminator power. If terminator power comes from the SCSI Card, it is not applied until the cable connector hood is properly connected. The SCSI cable has a built-in interlock that tells the SCSI Card to enable TERMPWR to the terminators when it is connected, unless TERMPWR comes from a device. For a description of how to enable and disable terminator power on the SCSI Card, see the description of switch SW1-2 in Chapter Two under the heading "Setting Switch SW1".

SCSI Card TERMPWR is designed to supply the power to the termination network at each end of the cable. The termination network at the computer end is integrated onto the card. The power available to the user is greater than 4.5 volts at up to .5 amps.

NOTE

Only *one* device on the SCSI bus should supply TERMPWR.

Figure C-1. Differential Cable Pin to Signal List

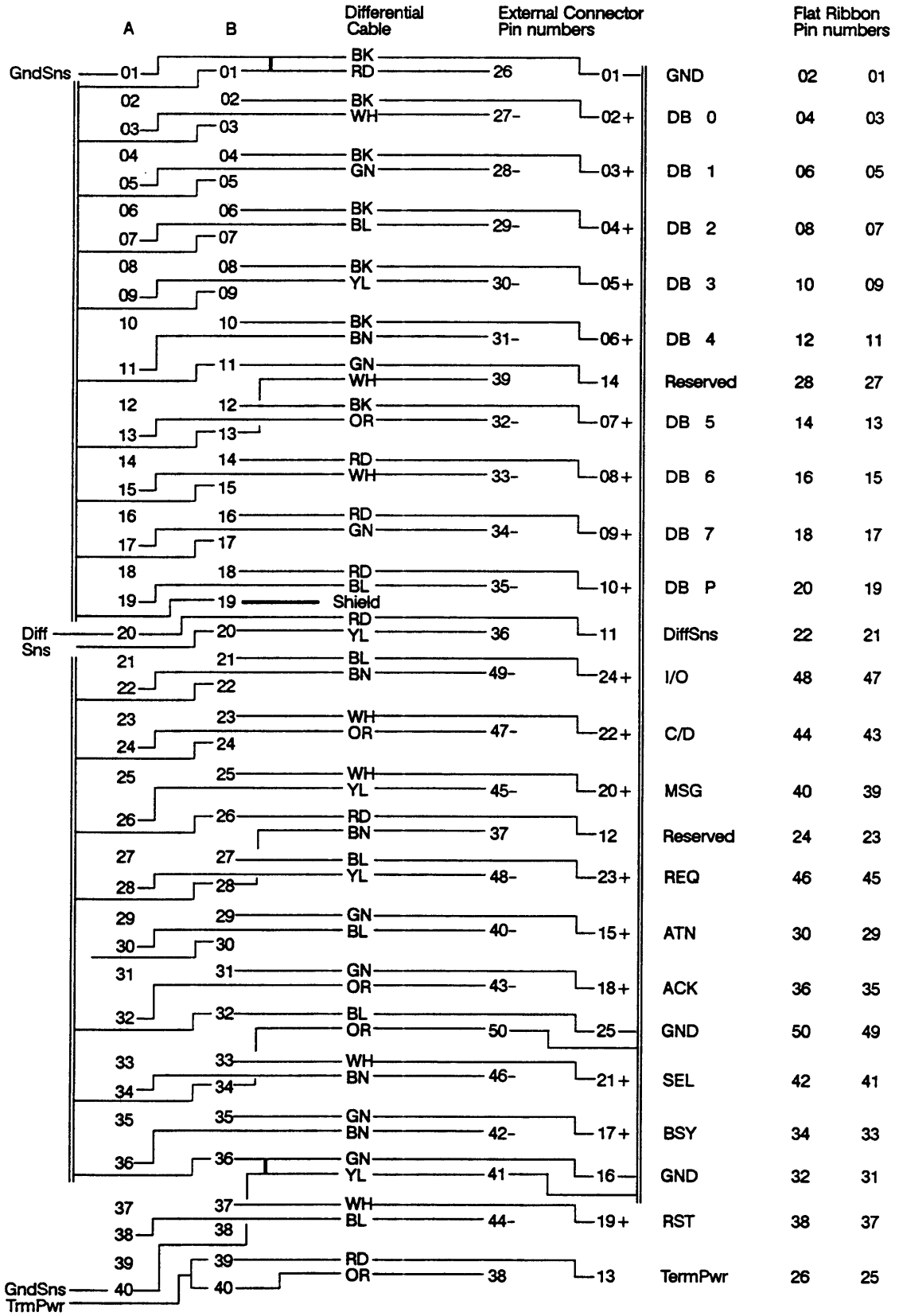

D

Card Connector P3 Pin to Signal List

Table D-1 provides a pin to signal list for SCSI Card connector P3.

Table D-1. Connector P3 Pin to Signal List

Pin	Signal Name	Pin	Signal Name
A1	GNDSENSA	B1	GROUND
A2	DBSE0	B2	DBCOM0
A3	DBDF0	B3	GROUND
A4	DBSE1	B4	DBCOM1
A5	DBDF1	B5	GROUND
A6	DBSE2	B6	DBCOM2
A7	DBDF2	B7	GROUND
A8	DBSE3	B8	DBCOM3
A9	DBDF3	B9	GROUND
A10	DBSE4	B10	DBCOM4
A11	DBDF4	B11	GROUND
A12	DBSE5	B12	DBCOM5
A13	DBDF5	B13	GROUND
A14	DBSE6	B14	DBCOM6
A15	DBDF6	B15	GROUND
A16	DBSE7	B16	DBCOM7
A17	DBDF7	B17	GROUND
A18	DBSEP	B18	DBCOMP
A19	DBDFP	B19	GROUND
A20	DIFFSENS	B20	GROUND
A21	IOSE	B21	IOCOM
A22	IODF	B22	GROUND
A23	CDSE	B23	CDCOM
A24	CDDF	B24	GROUND
A25	MSGSE	B25	MSGCOM
A26	MSGDF	B26	GROUND
A27	REQSE	B27	REQCOM
A28	REQDF	B28	GROUND
A29	ATNSE	B29	ATNCOM
A30	ATNDF	B30	GROUND
A31	ACKSE	B31	ACKCOM
A32	ACKDF	B32	GROUND
A33	SELSE	B33	SELCOM
A34	SELDF	B34	GROUND
A35	BSYSE	B35	BSYCOM
A36	BSYDF	B36	GROUND
A37	RSTSE	B37	RSTCOM
A38	RSTDF	B38	
A39	-	B39	TERMPWR
A40	GNDSENSB	B40	TERMPWR

The TERMPWR pins provide 4.5V at .5 amps for SCSI bus terminator power.

Glossary

Additional sense code: This provides more specific or additional drive error information for sense code. Additional sense code is located in the high byte (bits 6 - 15) of DVT 19.

Answer file: The file used to generate an RTE system that will match the general hardware and software configuration.

Backlashes: The hardware component that connects the I/O cards, CPU and memory within the computer.

Blocking Factor: A descriptor that indicates how to map RTE sectors into device sectors.

Boot Command file: This file is used when first loading RTE, to customize the system to its particular hardware and software configuration.

BUFR: Buffer address.

BUFLN: Buffer length.

Checksum: A method of error detection used to verify the integrity of the internal PROM.

Control Request: A command which enables users to make specific requests to the driver other than usual read and write requests.

CNTWD: Control word.

DDQ24: Relocatable SCSI tape device driver.

DDQ30: Relocatable SCSI disk device driver.

DDQ30_GEN: File that contains the default generation records for products supported by the DDQ30 disk device driver.

DDQ30.MAC: File that contains the source code for the 650/A Rewritable Optical Disk Driver.

DMA Priority: This determines the priority between two I/O cards attempting to use the backplane at the same time. The higher priority card gets to transfer data first.

DVP: Device Parameter. Device parameters pass special configuration information about the specific devices to the driver.

DVT: Device Table. This is the table that the system uses to keep information about the device transactions in progress.

EMI: Electro Magnetic Interference.

Extended status: Sense code and additional sense code in DVT 19.

Field Replaceable Unit (FRU): Any unit or part that customers can replace in the field for return to Hewlett-Packard for repair.

File Management Package: A program in RTE that handles file access.

Firmware: The card control program that resides in PROM on the card.

Firmware timestamp: The year, month and day of the firmware release and firmware revision codes.

IDQ35: Relocatable SCSI Interface Driver.

IFT: Interface table.

Interrupt priority: This determines how the system resolves which I/O card receives service if two cards request it at the same time.

LEDs (Light Emitting Diodes): Four lights which indicate SCSI self-test results. The LEDs show whether or not the SCSI Card has passed the self-test, and if it has failed, the pattern of the lights indicates the reason for the self-test failure.

Logical Unit (LU): A number that RTE assigns to each I/O device that was identified during system generation.

On-line Verification Program: A program which runs under RTE. It verifies correct operation of the I/O subsystem.

RTAGN: The program that uses an answer file and RTE relocatables to make an RTE system.

Runstring: The command given to RTE that indicates an action, for example, running a program.

SCSI: Small Computer Systems Interface I.

SCSI-II: Small Computer Systems Interface II.

Sense code: This code provides drive error information in the lower byte (bits 0 -7) of DVT 19.

SW1: A bank of eight switches that specifies the select code of the card and enables SCSI bus terminal power from the card.

SW2: A bank of eight switches that specifies the SCSI address.

Termination Power (TERMPWR): The SCSI signal that supplies power to the remote termination resistors.

VCP Terminal: The Virtual Control Panel. Through the VCP, you can initiate boot up, access CPU registers and access memory locations.

VSCSI: See glossary entry under On-line Verification Program.

Welcome file: A program which configures the user environment that is executed when the user logs onto an RTE system.

Index

A

ABreg (A and B registers) call, A-5, A-11
Additional sense code, A-6, A-11
Address of SCSI Card, 2-6, 4-9
Answer file, 3-3

B

Boot command file, 3-5
Bus terminator, 2-8

C

Cables, 1-1, 1-3
Command descriptor block (CDB), 5-4
Component locations on card, 2-4
Configuring devices, 2-3
Connectors, 1-1, 1-3

D

Device configuration, 2-3
Device status, 4-6, 4-11
Device table statement(s), 3-4
Device tables
  DVT 16, 5-11, A-1, A-3
  DVT 17, 5-12, A-2
  DVT 18, 5-12, A-2
  DVT 19, 5-12, A-5, A-11
  DVT 6, 5-10
Device vendor-model list, 4-6, 4-11
Digital Audio Tape drive errors, A-11
  Additional sense code, A-11
  Extended status, A-11
  Sense code, A-11
Disk initialization, 4-5
DMA priority, 2-7, 2-11
Driver access, 5-1
Drivers, 3-2
  Device support, 1-4
  Disk device (DDQ30), 3-2, 5-13
    Blocking factor, 5-15
    Buffer address, 5-13
    Buffer length, 5-14
    Bypass bit, 5-14
    Control word bits, 5-13
    Driver parameter table (DVP), 5-15
    Errors, A-3
    Read request, 5-13
    Sector address, 5-14
    Source code, 3-2
    Subfunction bits, 5-14
    Track address, 5-14
    Write request, 5-13
    Z-Buffer EXEC calls, 5-15
  Generation records, 3-2
  Interface (IDQ35), 3-2, 5-16
    DVT status, 5-17
    DVT transformation, 5-16
    Errors, A-4
  MACRO/1000 support routine, 3-2
  Partitions, 3-4
  Tape Device (DDQ24), Read request, 5-2
  Tape device (DDQ24), 3-2, 5-2
    Buffer address, 5-4
    Buffer length, 5-4
    Bypass bit, 5-3
    Command length, 5-4
    Commands, 5-4
    Control word bits, 5-2
    Error codes, 5-11
    Errors, A-1
    Extended transaction status, 5-12, A-2
    Subfunction bits, 5-3
    Transmission log, 5-12, A-2
    Write request, 5-2
    Z-Buffer read request, 5-2
    Z-Buffer write request, 5-2

E

EXEC calls
  Disk device driver (DDQ30), 5-13
  Disk device driver (DDQ30) Z-Buffer, 5-15
  Tape device driver (DDQ24), 5-2
Extender cable, 1-3

F

Firmware timestamp, 4-9, 4-12
Format a disk, 4-5
Fuse, 2-7

G

Generate the system, 3-5
Generation record, 1-2, 3-4

I

ID (SCSI Card) display, 4-8, 4-12
Information display, 4-6, 4-11
Initializing a disk, 4-5
Interface table statement(s), 3-4
Interrupt priority, 2-7, 2-11

L

Layout of SCSI Card, 2-4
LED (Light Emitting Diode) error patterns, 2-10, 4-2
LU list, 4-6, 4-11
LU number range, 3-3
LU status, 5-10

M

Maximum disk size, 5-15
Media options, 1-3
  1600 BPI Magnetic Tape, 1-3
  CS/80 Cartridge Tape, 1-3
  Microfloppy disks, 1-3
Modular jack, 2-2

O

Optical disk drive errors, A-5
  Additional sense code, A-6
  Extended status, A-5
  Sense code, A-6

P

Partitions, 3-3
Peripheral devices tested, 1-4
Power requirements, 1-5
Power supply load, 2-2

R

README file, 1-4, 3-3
Remove SCSI Card, 2-11
Renaming files, 3-6
RMPAR call, A-5, A-11
RTAGN, 3-5

S

SCSI Card address, 2-6
SCSI Card communication, 5-1
Select code setting, 2-5
Self-test, 2-9, 4-1, 4-8, 4-10
Sense code, A-6, A-11
Snap files, 3-5
Software numbering file (describes software), 3-2
Software options, 1-3
Switch SW1, 2-6
Switch SW2, 2-6
System files, 3-5

T

Table generation, 3-4
Termination power (TERMPWR), 1-5, 2-5, B-1, C-1
Terminator, 2-8
Test hood, 4-9, 4-13
Testing, SCSI Card, 2-9, 4-1
Troubleshooting, 4-1

U

UP command, 4-7

V

Verification program, 4-3
  Error code returned in CI variable, 4-13
  Ignore errors, 4-4
  Interactive interface, 4-4
    Commands, 4-4
    Display information, 4-6
    FMP test, 4-8
    Help, 4-5
    LOOPBACK test, 4-9
    Repeat Command(s), 4-8
    Self-test, 4-8
    Termination power on or off, 4-9
    Verbose mode, 4-7
  Non-Interactive interface
    Display information, 4-11
    FMP test, 4-12
    LOOPBACK test, 4-13
    RAM test, 4-13
    Repeat command(s), 4-10
    Run all tests, 4-13
    Runstring parameters, 4-9
    Self-test, 4-10
    Termination power on or off, 4-12
  Nontest parameters, 4-4
  Record test results in log file, 4-4
  Run all tests (-all), 4-13
  Terminal not HP, 4-4
  Usage message, 4-3
  Verbose mode, 4-4
  ZLPBK.HEX, 4-9
Verify hardware installation, 2-9

W

Welcome file, 3-5

Z

Z-Buffer calls (DDQ24), 5-2
Z-Buffer calls (DDQ30), 5-15

Manual Part No. 12016-90001
Printed in U.S.A. February 1991
E0191

HEWLETT PACKARD

MANUAL UPDATE

MANUAL IDENTIFICATION
Title: RTE-A Utilities Manual
Part Number: 12016-90003
Edition Date: January 1989

UPDATE IDENTIFICATION
Update Number: SCSI Update
Update Date: September, 1991

THIS UPDATE GOES WITH: Fourth Edition (January, 1989), of the *RTE-A Utilities Manual,* part number 92077-90004, (E0189) and Update 1 (U0790)

THE PURPOSE OF THIS MANUAL UPDATE
is to accumulate all the changes to the latest edition of the manual. Earlier updates to the latest edition which have not been incorporated are contained herein. This update package consists of all new and changed pages (backup pages are provided when necessary) plus this cover letter.

CHANGED PAGES
have the update designation at the bottom of the page. Changes are marked with a vertical bar in the margin. A vertical bar next to a page number indicates that major changes have been made to the content of the page. A dot next to a page number indicates that page elements have been rearranged, but with no significant change to the content. When an update is incorporated in a subsequent reprinting of the manual, these bars are not removed. "New" pages are those with a page number not present in the last edition of the manual.

TO UPDATE YOUR MANUAL
identify the latest Update (if any) already contained in your manual by referring to the Printing History Page (page 2). Incorporate only the Updates from this packet not already included in your manual. Following the instructions on the back of this page, replace existing pages with the Update pages and insert new pages as indicated. If any page is changed in two or more Updates, such as the Printing History Page which is furnished new for each Update, only the latest page will be included in the Update package. Destroy all replaced pages. If "write-in" instructions are included they are listed on the back of this page.

HEWLETT-PACKARD COMPANY
11000 Wolfe Road
Cupertino, CA 95014

Technical Manual Update

12016–90003
SCSI UPDATE ONLY

UPDATE	DESCRIPTION
SCSI	Replace or add the following pages with the pages supplied: Reader Comment Business Reply Printing History Title Page Pages 2-1 through 2-47D, 2-48 (Substitute for current pages 2-1 through 2-48)

NOTE

Throughout this document the word tape has been replaced with the word archive to reflect the changes for the SCSI product.