digital EQUIPMENT CORPORATION MAYNARD MASSACHUSETTS

DRAWING DIRECTORY

"THIS DRAWING AND SPECIFICATIONS, HEREIN, ARE THE PROPERTY OF DIGITAL EQUIPMENT CORPORATION AND SHALL NOT BE REPRODUCED OR COPIED OR USED IN WHOLE OR IN PART AS THE BASIS FOR THE MANUFACTURE OR SALE OF ITEMS WITHOUT WRITTEN PERMISSION. COPYRIGHT © 1973 , DIGITAL EQUIPMENT CORPORATION"

CUSTOMER PRINT SET INDEX

THIS IS PRINT SET

SEQUENCE	
DRAWING DIRECTORY	B-DD-DH11-Ø
CURRENT ADDRS & ADDRS SELECT	D-CS-M7277-Ø-1
REG & BYTE CNT	D-CS-M7278-Ø-1
FIFO BUFFER	D-CS-M7279-Ø-1
DH11 LINE PARAMETER CONTROL	D-CS-M7288-Ø-1
SYSTEM CNTL & RCV SCAN	D-CS-M7289-Ø-1
PRIORITY SELECTOR	D-CS-G736Ø-Ø-1
DH11 DC11 CLOCK	D-CS-M454Ø-Ø-1
INTERRUPT CONTROL	D-CS-M7821-Ø-1
UNIBUS MASTER CONTROL M796	D-CS-M796-Ø-1
INTERNAL BUS CONN M92Ø	C-CS-M92Ø-Ø-1
CABLE INTERFACE	D-CS-M971-Ø-1
M CONNECTOR MODULE	C-CS-M973-Ø-1
VARIABLE CLOCK M4Ø1	B-CS-M4Ø1-Ø-1
DTR JUMPER	C-CS-W4Ø4-Ø-1
CRYSTAL CLOCK M4Ø5	B-CS-M4Ø5-Ø-1
EIA LEVEL CONVERTER	C-CS-M594-Ø-1
TTY 2Ø MA CONVERTER	D-CS-M596-Ø-1
POWER HARNESS	D-IA-7008493-0-0
DM11 MAINTENANCE JUMPER	B-CS-M974-Ø-1
CIRCUIT SCHEMATIC (BACK PANEL)	D-CS-5410333-0-1
MULTIPLE UART CARD LINES 0-7	D-BS-DH11-Ø-8
MULTIPLE UART CARD LINES 8-15	D-BS-DH11-Ø-9
ENGINEERING SPEC	A-SP-DH11-Ø-5
WIRE LIST	K-WL-DH11-Ø-2
MODULE UTILIZATION	D-MU-DH11-Ø-3
DM11-BB BLOCK DIAGRAM	D-BD-DH11-Ø-4
DM11-DB TRANSMIT & RECEIVE	D-BS-DM11-A-Ø8
DM11-DA CONNECTOR CARDS	D-IC-DM11-A-Ø9
MODULE UTILIZATION (DIST PNL)	D-MU-DM11-A-3
WIRE LIST (DIST PNL)	K-WL-DM11-A-5
SOFTWARE LIST	A-SL-DH11-Ø-7
ACCESSORY LIST	A-AL-DH11-Ø-6
I/O CABLE ASSY	C-IA-BCØ8s-Ø-Ø
INTERCONNECTION DH11	C-IC-DH11-Ø-13
H758 POWER SUPPLY	E-UA-H758-Ø-Ø
MODULE UTILIZATION (PL)	A-PL-DH11-Ø-3
UNIT ASSY (DH11)	D-UA-DH11-Ø-Ø
DH11 UNIBUS INTERFACE	D-BD-DH11-Ø-12
GRANT CONTINUITY CARD	D-CS-G727-Ø-1
DH11 MODULE TEST PROCEDURE	A-SP-DH11-Ø-11
WIRED ASSY (DH11)	D-IA-7009180-0-0
CABLE CARD ASSY	D-UA-BC01R-Ø-Ø

SEQUENCE	
INTERCONNECTION (DM11)	C-IC-DM11-A-4
LOGIC ASSY	C-IA-7008456-0-0
FIFO BUFFER (M7279)	D-BS-DH11-Ø-15
DH11 OPTION HARNESS	D-IA-7009561-0-0
MODEM CONTROL (LINES 0-07)	D-CS-M7808-Ø-1
MODEM CONTROL (LINES 8-15)	D-CS-M78Ø7-Ø-1
EIA DATA LINE CONVERSION & PRIORITY	D-CS-M59Ø6-Ø-1
H317-B CABLE BOX ASSY	D-UA-H317-Ø-Ø
DJ11 EIA DIST PANEL	D-CS-5410260-0-1
MODEM CONTROL BLOCK DIAGRAM	D-BD-DH11-Ø-16
MODEM I/O CABLE ASSY	C-IA-BCØ8R-Ø-Ø
H315 MODEM TEST CONNECTOR	D-CS-H315-Ø-1
H816 TEST CONNECTOR	D-CS-H861-Ø-1
H8611 TEST CONNECTOR	C-UA-H8611-Ø-Ø
CLOCK INSTALLATION PROCEDURE	A-SP-DH11-Ø-17
20MA TO TTL CONVERTER	D-CS-M596Ø-Ø-1
CASSETTE POWER SUPPLY	D-CS-541Ø131-Ø-1

MFG. PRINT SET

DH11 TEST PROCEDURE	A-SP-DH11-Ø-1Ø
ACCEPTANCE PROCEDURE	A-AP-DH11-Ø-14

NOTE: CASSETTE POWER SUPPLY 5410131 IS USED IN H758 POWER SUPPLY.

UNIT VARIATIONS

VAR	TITLE	PRINT SET A	PRINT SET B		
DH11-AA	16 LINE MUX DIST PANEL & 115V PS PROG LINE SPEEDS	X			
DH11-AB	16 LINE MUX	X			
DH11-AC	230V DH11 AA	X			
DH11-AD	16 LINE MUX. EIA DIST PANEL, MODEM CONTROL EIA LEVEL CONVERSION		X		
DH11-AE	DH11-AD WITHOUT MODEM CONTROL		X		

REV	CHG. NO.	DATE
A	DH11-1	4/73
B	DH11-2	7/73
C	DH11-3	12/73
D	DH11-4	2/74
E	DH11-5	3/74
F	DH11-6	6/74
H	DH11-7	10/74
J	DH11-8	12/74
K	DH11-9	1/75
L	7009180-3	2/75
M	DH11-10	10/75
N	DH11-11	7/76

REVISIONS

USED ON OPTION/MODEL

SHEET 1 OF 5

DRN. R. PUDELKO	DATE 2-9-73	TITLE 16 LINE MUX DIST PANEL & 115V PS PROG LINE SPEEDS
CHK'D. K GLEEZEN	DATE 2-22-73	
PROJ ENG. J. MCNAMARA	DATE 2-22-73	
PROD. B. DIGREGORIO	DATE 2-23-73	SIZE B · CODE DD · NUMBER DH11-Ø · REV N
FIELD SERV. R. EVANS	DATE 2-23	DIST

DRB 106

DEC 16-(325)-1262-10 2073

5

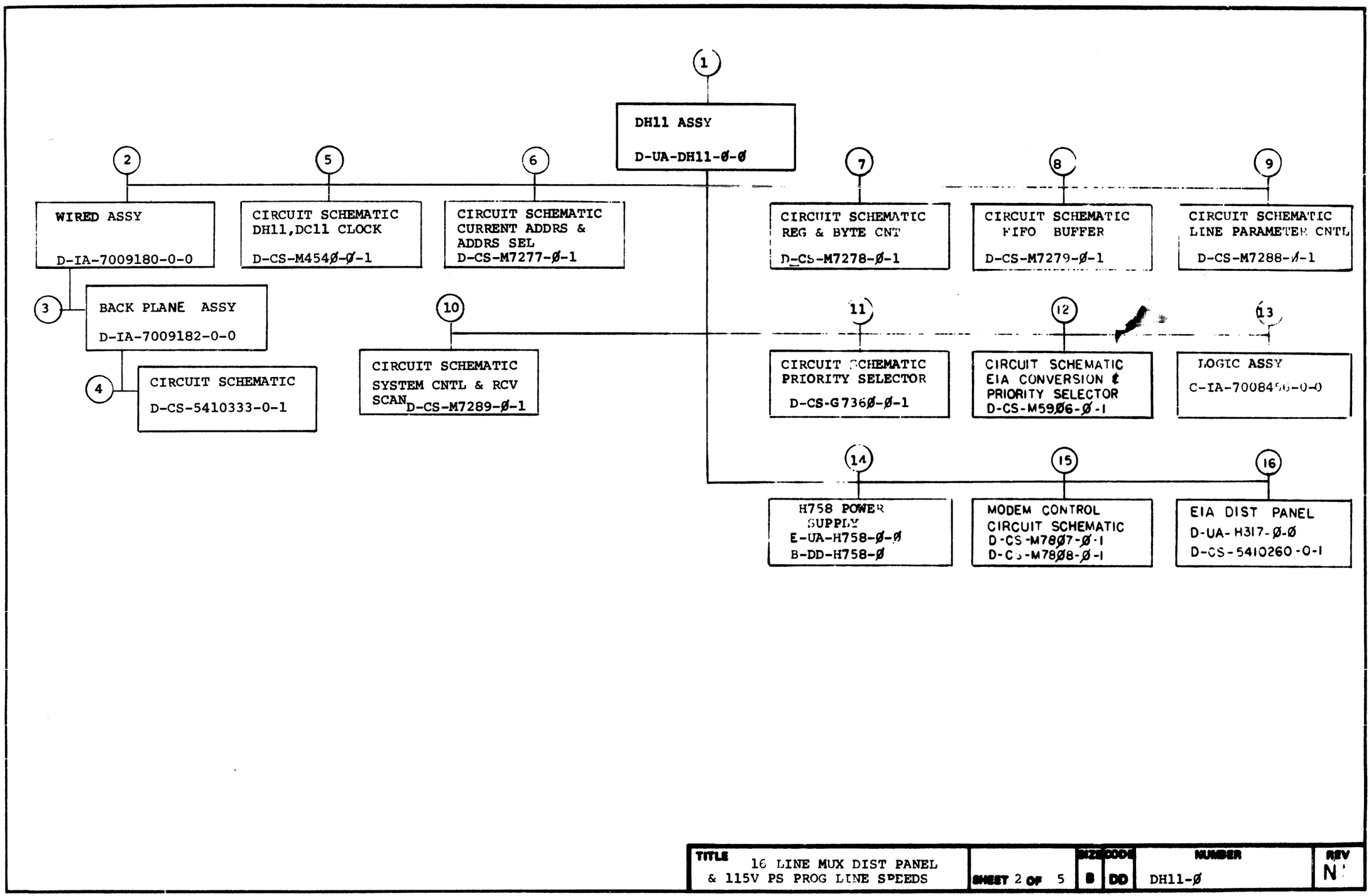

TITLE	SHEET	SIZE	CODE	NUMBER	REV
16 LINE MUX DIST PANEL & 115V PS PROG LINE SPEEDS	2 OF 5	B	DD	DH11-Ø	N

DRB 107
DEC 16—(325)—1062—3—N871

CUSTOMER PRINT SET A	B		MFG. SET	FIND NO.	DRAWING NO.	REV	NO OF SHT	DESCRIPTION	OPTION NO./FILE DATE
					ELECTRICAL				
X	X			1	D-UA-DH11-Ø-Ø	E	14	UNIT ASSY (DH11)	
	X				D-BD-DH11-Ø-16	*	2	MODEM CONTROL BLOCK DIAGRAM	
X	X				D-MU-DH11-Ø-3	D	1	MODULE UTILAZATION	
X	X				A-PL-DH11-Ø-3	D	1	MODULE UTILIZATION (PL)	
X					D-BD-DH11-Ø-4	*	1	DM11-BB BLOCK DIAGRAM	
X	X				A-SP-DH11-Ø-5	B	25	ENGINEERING SPEC	
X	X				A-AL-DH11-Ø-6	D	1	ACCESSORY LIST	
X	X				A-SL-DH11-Ø-7	A	2	SOFTWARE LIST	
X	X				D-BS-DH11-Ø-8	A	5	MULTIPLE UART CARD LINE Ø-7	
X	X				D-BS-DH11-Ø-9	A	5	MULTIPLE UART CARD LINE 8-15	
X					D-MU-DM11-A-3	#	1	MODULE UTILIZATION (DIST PNL)	
X					C-IC-DM11-A-4	#	1	INTERCONNECTION (DM11)	
C					K-WL-DM11-[illegible]5	#	1	WIRE LIST (DIST PNL)	
X					D-BS-DM11-A-[illegible]	#	2	DM11-DB TRANSMIT & RECEIVE	
X					D-IC DM11-A-9	#	2	DM11-DA CONNECTOR CARDS	
X	X				C-IA-BCØ8S-Ø-Ø	#	1	I/O CABLE ASSY	
X					D-IA-7008493-0-0	#	1	POWER HARNESS	
	X				C-IA-BCØ8R-Ø-Ø	#	1	MODEM I/O CABLE ASSY.	
X	X				B-CS-M4Ø1-Ø-1	#	1	VARIABLE CLOCK (M4Ø1)	
X					C-CS-W4Ø4-Ø-1	#	1	DTR JUMPER	
X	X				B-CS-M4Ø5-Ø-1	#	1	CRYSTAL CLOCK (M4Ø5)	
X					C-CS-M594-Ø-1	#	1	EIA LEVEL CONVERTER	
X					D-CS-M596-Ø-1	#	2	TTY 2Ø MA CONVERTER	
X	X				D-CS-M7821-Ø-1	#	1	INTERRUPT CONTROL	
X	X				D-CS-M796-Ø-1	#	1	UNIVUS MASTER CONTROL (M796)	
X	X				C-CS-M92Ø-Ø-1	#	1	INTERNAL BUS CONN (M920)	
X					D-CS-M971-Ø-1	#	1	CABLE INTERFACE	
X					C-CS-M973-Ø-1	#	1	TTY CABLE CONNECTOR	
X					B-CS-M974-Ø-1	#	1	DM11 MAINTENANCE JUMPER	
	X				D-CS-H861-Ø-1	#	1	H861 TEST CONNECTOR	
			X		A-SP-DH11-Ø-10	B	40	DH11 TEST PROCEDURE	
X	X				A-SP-DH11-Ø-11	A	28	DH11 MODULE TEST PROCEDURE	
X	X				D-BD-DH11-Ø-12	C	3	DH11 UNIBUS INTERFACE	
X	X				C-IC-DH11-Ø-13	B	2	INTERCONNECTION DH11	
X					D-UA-BC01R-Ø-Ø	#	1	CABLE CARD ASSY	
X	X				D-CS-G727-Ø-1	#	1	GRANT CONTINUITY CARD	
			X		A-AP-DH11-Ø-14	B	7	ACCEPTANCE PROCEDURE	
X	X				D-BS-DH11-Ø-15	*	2	FIFO BUFFER (M7279)	
X	X				D-IA-7009561-0-0	#	1	DH11 PWR HARNESS	
	X				D-CS-H315-Ø-1	#	1	H315 MODEM TEST CONNECTOR	
	X				C-AU-H8611	#	1	M59Ø6 TEST CONNECTOR	
X	X			2	D-IA-7009180-0-0	#	1	WIRED ASSY (DH11)	
C	C				K-WL-DH11-Ø-2	C	1	WIRE LIST	
					A-WT-7009180-0	#	1	AWT REVISION STATUS	

CUSTOMER PRINT SET A	B		MFG SET	FIND NO.	DRAWING NO.	REV	NO OF SHT	DESCRIPTION	OPTION NO./FILE DATE
					ELECTRICAL				
				3	D-IA-7009182-0-0		1	BACK PLANE ASSY	
X	X			4	D-CS-5410333-0-1	#	1	CIRCUIT SCHEMATIC (BACK PNL)	
					K-CO-5410333-0-4		1	X-Y COORDINATE HOLE LOCATION	
					D-AH-5410333-0-5		1	ASSY DRILLING HOLE LOCATION	
					B-MH-5410333-0-6		1	MODULE ECO HISTORY	
X	X			6	D-CS-M7277-Ø-1	#	6	CIRCUIT SCHEMATIC (CURRENT ADDRS)	
					K-CO-M7277-Ø-4		1	X-Y COORDINATE HOLE LOCATION	
					D-AH-M7277-Ø-5		1	ASSY DRILLING HOLE LOCATION	
					B-MH-M7277-Ø-6		1	MODULE ECO HISTORY	
X	X			7	D-CS-M7278-Ø-1	#	8	CIRCUIT SCHEMATIC (REG&BYTE CNT)	
					K-CO-M7278-Ø-4		1	X-Y COORDINATE HOLE LOCATION	
					D-AH-M7278-Ø-5		1	ASSY DRILLING HOLE LOCATION	
					B-MH-M7278-Ø-6		1	MODULE ECO HISTORY	
X	X			8	D-CS-M7279-Ø-1	#	3	CIRCUIT SCHEMATIC (FIFO BUFFER)	
					K-CO-M7279-Ø-4		1	X-Y COORDINATE HOLE LOCATION	
					D-AH-M7279-Ø-5		1	ASSY DRILLING HOLE LOCATION	
					B-MH-M7279-Ø-6		1	MODULE ECO HISTORY	

CUSTOMER PRINT SET CODES
X = PRINT OF DOCUMENT INCLUDED IN PRINT SET
C = INCLUDES ALL PRINTS INDICATED ON DOCUMENT
S = CONFIDENTIAL AUTHORIZED SIGNATURE REQUIRED

TITLE 16 LINE MUX DIST PANEL & 115V PS PROG LINE SPEEDS

SHEET 3 OF 5 | SIZE B | CODE DD | NUMBER DH11-Ø | REV N

DRB 108

DEC 16-(325)-1062-2B-R972

ELECTRICAL

CUSTOMER PRINT SET A	B			MFG. SET	FIND NO.	DRAWING NO.	REV	NO OF SHT	DESCRIPTION	OPTION NO./FILE DATE
X	X				9	D-CS-M7288-Ø-1	#	11	CIRCUIT SCHEMATIC (LINE PARAM)	
						K-CO-M7288-Ø-4		1	X-Y COORDINATE HOLE LOCATION	
						D-AH-M7288-Ø-5		1	ASSY DRILLING HOLE LOCATION	
						B-MH-M7288-Ø-6		1	MODULE ECO HISTORY	
X	X				10	D-CS-M7289-Ø-1	#	6	CIRCUIT SCHEMATIC (SYSTEM CNTL)	
						K-CO-M7289-Ø-4		1	X-Y COORDINATE HOLE LOCATION	
						D-AH-M7289-Ø-5		1	ASSY DRILLING HOLE LOCATION	
						B-MH-M7289-Ø-6		1	MODULE ECO HISTORY	
X					11	D-CS-G736Ø-Ø-1	#	1	CIRCUIT SCHEMATIC (PRIORITY SEL)	
						K-CO-G7360-Ø-4		1	X-Y COORDINATE HOLE LOCATION	
						D-AH-G736Ø-Ø-5		1	ASSY DRILLING HOLE LOCATION	
						B-MH-G736Ø-Ø-6		1	MODULE ECO HISTORY	
	X				12	D-CS-M59Ø6-Ø-1	#	3	CIRCUIT SCHEMATIC (EIA LEVEL CONVERSION + PRIORTY SEL)	
						K-CO-M59Ø6-Ø-4	#	1	X-Y COORDINATE HOLE LOCATION	
						D-AH-M59Ø6-Ø-5	#	1	ASSY DRILLING HOLE	
						B-MH-M59Ø6-Ø-6	#	1	MODULE HISTORY	
						B-DD-9305931-0	#	2	M59Ø6 TESTER	
X					13	C-IA-7008456-0-0	#	1	LOGIC ASSY (DM11 PNL)	
						D-AD-7008443-0-0		1	WIRED ASSY (DM11)	
						A-PL-7008443-0-0		1	WIRED ASSY (DM11 PL)	
					14	B-DD-H758-0		1	DRAWING DIRECTORY	
X						E-UA-H758-0-0	#	2	UNIT ASSY (H758)	
X						D-CS-5410131-0-1	#	2	CASSETTE POWER SUPPLY	

CUSTOMER PRINT SET A	B			MFG SET	FIND NO.	DRAWING NO.	REV	NO OF SHT	DESCRIPTION	OPTION NO./FILE DATE
	X				15	D-CS-M78Ø7-Ø-1	#	7	CIRCUIT SCHEMATIC (BUS CONTROL MUX)	
						K CO-M78Ø7-Ø-4		1	X-Y COORDINATE HOLE LOCATION	
						D-AH-M78Ø7-Ø-5		1	ASSY DRILLING HOLE LAYOUT	
						B MH-M78Ø7-Ø-6		1	MODULE HISTORY	
	X					D-CS-M78Ø8-Ø-1	#	7	CIRCUIT SCHEMATIC (MODEM CONTROL)	
						K-CO-M78Ø8-Ø-4		1	X-Y COORDINATE HOLE LOCATION	
						D-AH-M78Ø8-Ø-5		1	ASSY DRILLING HOLE LAYOUT	
						B-MH-M78Ø8-Ø-6		1	MODULE HISTORY	
	X				16	D-UA-H317-Ø-Ø	#	1	CABLE BUS ASSY	
	X					D-CS-5410260-0-1	#	3	DJ11 EIA DIST PANEL	
X	X					A-SP-DH11-0-17			INSTALLATION OF ADDITIONAL DH11 CLOCKS	
X						D-CS-M5960-0-1	#	2	20 MA TO TTL CONVERTER	

CUSTOMER PRINT SET CODES	
	X = PRINT OF DOCUMENT INCLUDED IN PRINT SET
	C = INCLUDES ALL PRINTS INDICATED ON DOCUMENT
	S = CONFIDENTIAL AUTHORIZED SIGNATURE REQUIRED

TITLE	SHEET	SIZE	CODE	NUMBER	REV
16 LINE MUX DIST PANEL & 115V PS PROG LINE SPEEDS	4 OF 5	B	DD	DH11-Ø	N

DRB 108

DEC 16-(325)-1062-2B-R972

CUSTOMER PRINT SET A	B		MFG. SET	FIND NO.	DRAWING NO.	REV	NO OF SHT	DESCRIPTION	OPTION NO./FILE DATE
				1	D-UA-DH11-Ø-Ø	E	14	UNIT ASSY (DH11)	
				2	D-IA-7009180-0-0	#	1	WIRED ASSY (DH11)	
				3	D-IA-7009182-0-0		1	BACK PLANE ASSY	
				4	D-CS-5410333-0-1	#	1	CIRCUIT SCHEMATIC (BACK PANEL)	
					K-CO-5410333-0-4		1	X-Y COORDINATE HOLE LOCATION	
					D-AH-5410333-0-5		1	ASSY DRILLING HOLE LOCATION	
					B-MH-5410333-0-6		1	MODULE ECO HISTORY	
X	X			5	D-CS-M454Ø-Ø-1	#	2	CIRCUIT SCHEMATIC (DH11,DC11 CLOCK)	
					K-CO-M454Ø-Ø-4		1	X-Y COORDINATE HOLE LOCATION	
					D-AH-M454Ø-Ø-5		1	ASSY DRILLING HOLE LOCATION	
					B-MH-M454Ø-Ø-6		1	MODULE ECO HISTORY	
				6	D-CS-M7277-Ø-1	#	6	CIRCUIT SCHEMATIC (CURRENT ADDRS)	
					K-CO-M7277-Ø-4		1	X-Y COORDINATE HOLE LOCATION	
					D-AH-M7277-Ø-5		1	ASSY DRILLING HOLE LOCATION	
					B-MH-M7277-Ø-6		1	MODULE ECO HISTORY	
				7	D-CS-M7278-Ø-1	#	8	CIRCUIT SCHEMATIC (REG&BYTE CNT)	
					K-CO-M7278-Ø-4		1	X-Y COORDINATE HOLE LOCATION	
					D-AH-M7278-Ø-5		1	ASSY DRILLING HOLE LOCATION	
					B-MH-M7278-Ø-6		1	MODULE ECO HISTORY	

CUSTOMER PRINT SET	MFG SET	FIND NO.	DRAWING NO.	REV	NO OF SHT	DESCRIPTION	OPTION NO./FILE DATE
		8	D-CS-M7279-Ø-1	#	3	CIRCUIT SCHEMATIC (FIFO BUFFER)	
			K-CO-M7279-Ø-4		1	X-Y COORDINATED HOLE LOCATION	
			D-AH-M7279-Ø-5		1	ASSY DRILLING HOLE LOCATION	
			B-MH-M7279-Ø-6		1	MODULE ECO HISTORY	
		9	D-CS-M7288-Ø-1	#	11	CIRCUIT SCHEMATIC (LINE PARA)	
			K-CO-M7288-Ø-4		1	X-Y COORDINATE HOLE LOCATION	
			D-AH-M7288-Ø-5		1	ASSY DRILLING HOLE LOCATION	
			B-MH-M7288-Ø-6		1	MODULE ECO HISTORY	
		10	D-CS-M7289-Ø-1	#	6	CIRCUIT SCHEMATIC (SYSTEM CNTL)	
			K-CO-M7289-Ø-4		1	X-Y COORDINATE HOLE LOCATION	
			D-AH-M7289-Ø-5		1	ASSY DRILLING HOLE LOCATION	
			B-MH-M7289-Ø-6		1	MODULE ECO HISTORY	
		11	D-CS-G7360-Ø-1	#	1	CIRCUIT SCHEMATIC (PRIORITY SEL)	
			K-CO-G736Ø-Ø-4		1	X-Y COORDINATE HOLE LOCATION	
			D-AH-G7360-Ø-5		1	ASSY DRILLING HOLE LOCATION	
			B-MH-G7360-Ø-6		1	MODULE ECO HISTORY	
		13	C-IA-7008456-0-0	#	1	LOGIC ASSY (DM11 PNL)	
			D-AD-7008443-0-0		1	WIRED ASSY (DM11)	
			A-PL-7008443-0-0		1	WIRED ASSY (DM11 PL)	
		14	B-DD-H758-0		1	DRAWING DIRECTORY	
			E-UA-H758-0-0	#	2	UNIT ASSY (H758)	
		16	D-UA-H317-0-0		1	H317 CABLE BOX ASSY	

CUSTOMER PRINT SET CODES
X = PRINT OF DOCUMENT INCLUDED IN PRINT SET
C = INCLUDES ALL PRINTS INDICATED ON DOCUMENT
S = CONFIDENTIAL AUTHORIZED SIGNATURE REQUIRED

TITLE	SHEET	SIZE	CODE	NUMBER	REV
16 LINE MUX DIST PANEL & 115V PS PROG LINE SPEEDS	5 OF 5	B	DD	DH11-Ø	N

DRB 108

DEC 16-(325)-1062-2B-R972

PAGE REVISION CONTROL SHEET

SH NO.	PAGE REVISIONS											REMARKS
1	A	B	C	D	E	F	H	J	K	L	M	REVISE ALL SHEETS ON EACH ECO
2	A	B	C	D	E	F	H	J	K	L	M	
3	A	B	C	D	E	F	H	J	K	L	M	
4	A	B	C	D	E	F	H	J	K	L	M	
5	A	B	C	D	E	F	H	J	K	L	M	
6	A	B	C	D	E	F	H	J	K	L	M	
ECO NO.	—	00001	00002	00003	00004	00005	00006	00007	00008	00009	00010	
ETCH REV.	A	A	B	B	C	C	C	D	D	E	E	
ENG.												
DATE	—	4/26/73	8/13/73	2/5/74	3-20-74	6-22-75	8-18-75	1·28·76	9-17-76	12-21-76	8-77	

FIRST USED ON OPTION/MODEL

PDP 11

DRN.		DATE 12-7-72
CHK'D		DATE
ENG.		DATE 1-11-73
PROJ. ENG.		DATE 1-12-73
PROD.		DATE 1-22-73

digital EQUIPMENT CORPORATION
MAYNARD MASSACHUSETTS

TITLE
CURRENT ADDRS & ADDRS SELECT

NEXT HIGHER ASSY.
B-DD-DH11-Ø

SCALE —/—

SHEET 1 OF 6

SIZE	CODE	NUMBER	REV.
B	CS	M7277-Ø-1	M

DIST.

"THIS DRAWING AND SPECIFICATIONS, HEREIN, ARE THE PROPERTY OF DIGITAL EQUIPMENT CORPORATION AND SHALL NOT BE REPRODUCED OR COPIED OR USED IN WHOLE OR IN PART AS THE BASIS FOR THE MANUFACTURE OR SALE OF ITEMS WITHOUT WRITTEN PERMISSION.
COPYRIGHT © 1972 DIGITAL EQUIPMENT CORPORATION"

This drawing and specifications, herein, are the property of Digital Equipment Corporation and shall not be reproduced or copied or used in whole or in part as the basis for the manufacture or sale of items without written permission. COPYRIGHT © 1972
DIGITAL EQUIPMENT CORPORATION

NOTES:

1. MODULE SHALL BE MANUFACTURED WITH ALL JUMPERS (W4 THRU W12) INSTALLED. USE ITEM 51 BUS WIRE. OPTION MANUFACTURING AND FIELD SERVICE PERSONNEL WILL CUT JUMPERS TO SELECT PROPER ADDRESS.

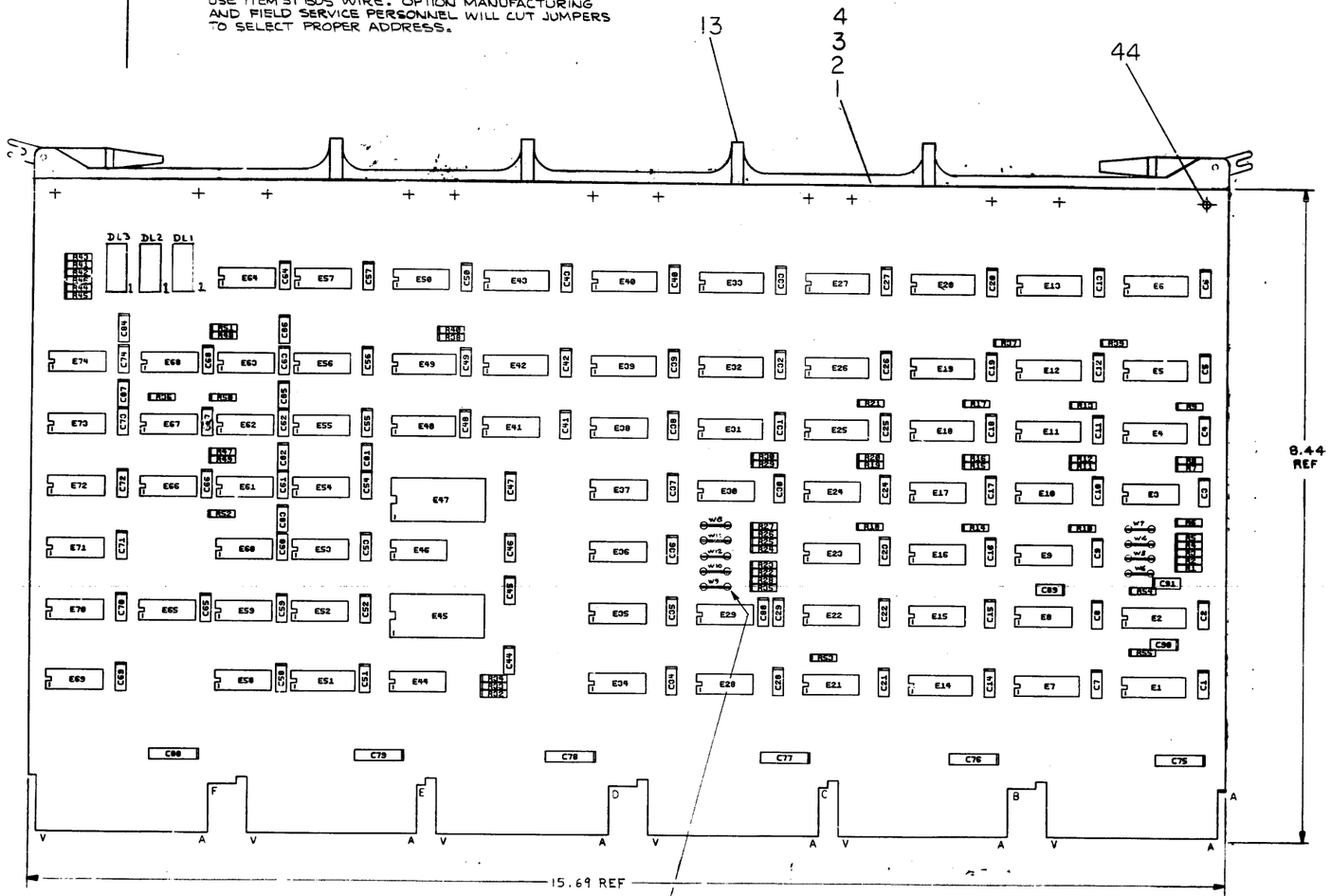

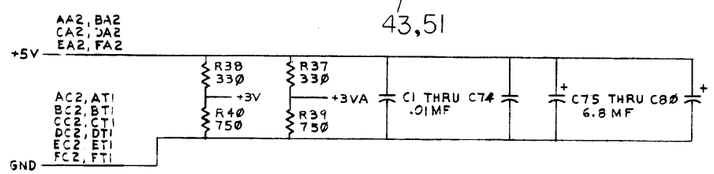

IC TYPE	GND	+5V
DEC 74157	8	16
DEC 7489	8	16
DEC 74150	12	24
DEC 7442	8	16
DEC 74193	8	16
DEC 74154	12	24
DEC 8640	1	8

GND AND 5V ARE USUALLY PIN 7 AND 14 RESPECTIVELY EXCEPTIONS ARE STATED ABOVE

IC PIN LOCATIONS

QTY	REF DESIGNATION	DESCRIPTION	PART NO.	ITEM NO.
		X-Y COORDINATE HOLE LOCATION	K-CO-M7277-0-4	1
		ASSY/DRILLING HOLE LAYOUT	D-AH-M7277-0-5	2
		ECO MODULE HISTORY	B-MH-M7277-0-8	3
1		ETCHED CIRCUIT BOARD	5010246	4
4	C84,C88,C90,C91	CAP 10.0 MMF 100V 5%	1000006	5
1	C85	CAP 15.0 MMF 100V 5%	~~1000007~~ 1002427	6
2	C81,C82	CAP 47.0 MMF 100V 5%	1000011	7
2	C83,C89	CAP 100.0 MMF 100V 5%	1000016	8
1	C80	CAP 470.0 MMF 100V 5%	1000024	9
1	C83	CAP 1000.0 MMF 100V 5%	1000042	10
74	C1 THRU C74	CAP .01 MF 100V 20% DISC	1001810-01	11
6	C75 THRU C80	CAP 6.8 MF 35V 10% S.TANT	1005306	12
1		HANDLE MODULE	1210711-02	13
1	R35	RES 100 OHMS 1/4W 5%	1300229	14
2	R37,R38	RES 330 OHMS 1/4W 5%	1300295	15
3	R44,R45,R46	RES 390 OHMS 1/4W 5%	1300309	16
3	R41,R42,R43	RES 470 OHMS 1/4W 5%	1300316	17
33	R1 THRU R30,R32,R33,R34	RES 1K OHMS 1/4W 5%	1300365	18
1	R36	RES 3K OHMS 1/4W 5%	1300432	19
1	R52	RES 3.3K OHMS 1/4W 5%	1300439	20
5	R47 THRU R51	RES 10K OHMS 1/4W 5%	1300479	21
2	R39,R40	RES 750 OHMS 1/4W 5%	1301401	22
3	DL1,DL2,DL3	DELAY LINE 30NS	1605520-01	23
1	E53	I.C. DEC 7400	1905575	24
1	E55	I.C. DEC 7410	1905578	25
1	E72	I.C. DEC 7420	1905577	26
2	E68,E71	I.C. DEC 7440	1905579	27
8	E34,E37,E38,E41,E50,E57,E58,E69	I.C. DEC 7402	1909004	28
2	E21,E20	I.C. DEC 8640	1911489	29
2	E56,E73	I.C. DEC 74H74	1909667	30
10	E3,E10,E17,E24,E30,E35,E36,E48,E74,E15	I.C. DEC 7404	1909686	31
1	E47	I.C. DEC 74154	1909701	32
2	E22,E20	I.C. DEC 8881	1909705	33
3	E9,E16,E23	I.C. DEC 8242	1909712	34
1	E44	I.C. DEC 7417	1909929	35
6	E6,E12,E19,E26,E32,E49	I.C. DEC 74193	1910018	36
1	E51	I.C. DEC 7442	1910046	37
1	E45	I.C. DEC 74150	1910153	38
5	E52,E59,E64,E65,E70	I.C. DEC 7408	1910155	39
8	E54,E60,E61,E62,E63,E67,E66,E8.	I.C. DEC 74121	1910230	40
5	E4,E11,E18,E25,E31,	I.C. DEC 7489	1910398	41
10	E0,E13,E20,E27,E33,E39,E40,E42,E43,E46	I.C. DEC 74157	1910655	42
18		SPLIT LUG	9006735	43
12		EYELET(BS-4-7)	9000024-01	44
3	E1,E7,E14	I.C. DEC 8830	1911117	45
1	R53	RES. 1.5K 1/4W 5%	1300391	46
~~A/R~~		~~TUBING,THINWALL WHT TFE~~	~~9107256-09~~	~~47~~
1	E2	IC,DEC 9602	1910951	48
~~A/R~~		~~WIRE,30 AWG INSULATED~~	~~9107740~~	~~49~~
2	R54 R55	RES 7.5K OHMS 1/4W 5%	1301402	50
A/R	W4 THRU W12	WIRE 22 AWG BUS	9107560-01	51

PARTS LIST

FIRST USED ON OPTION MODEL: PDP 11

ETCH BOARD REV: E

CHANGE NO.	DEC NO.	EIA NO.	DEC NO.	EIA NO.

REVISIONS

SEMICONDUCTOR CONVERSION CHART

DRN 2-20-72 · CHK · ENG · MFG · QA

NEXT HIGHER ASSY: B-DD-DH11-0

SCALE NONE · SHEET 2 OF 5

digital EQUIPMENT CORPORATION MAYNARD, MASSACHUSETTS

TITLE: CURRENT ADDRS & ADDRS SELECT

SIZE DCS · CODE · NUMBER M7277-0-1 · REV. M

DIST.

This drawing and specifications, herein, are the property of Digital Equipment Corporation and shall not be reproduced or copied or used in whole or in part as the basis for the manufacture or sale of items without written permission COPYRIGHT © 1972
DIGITAL EQUIPMENT CORPORATION

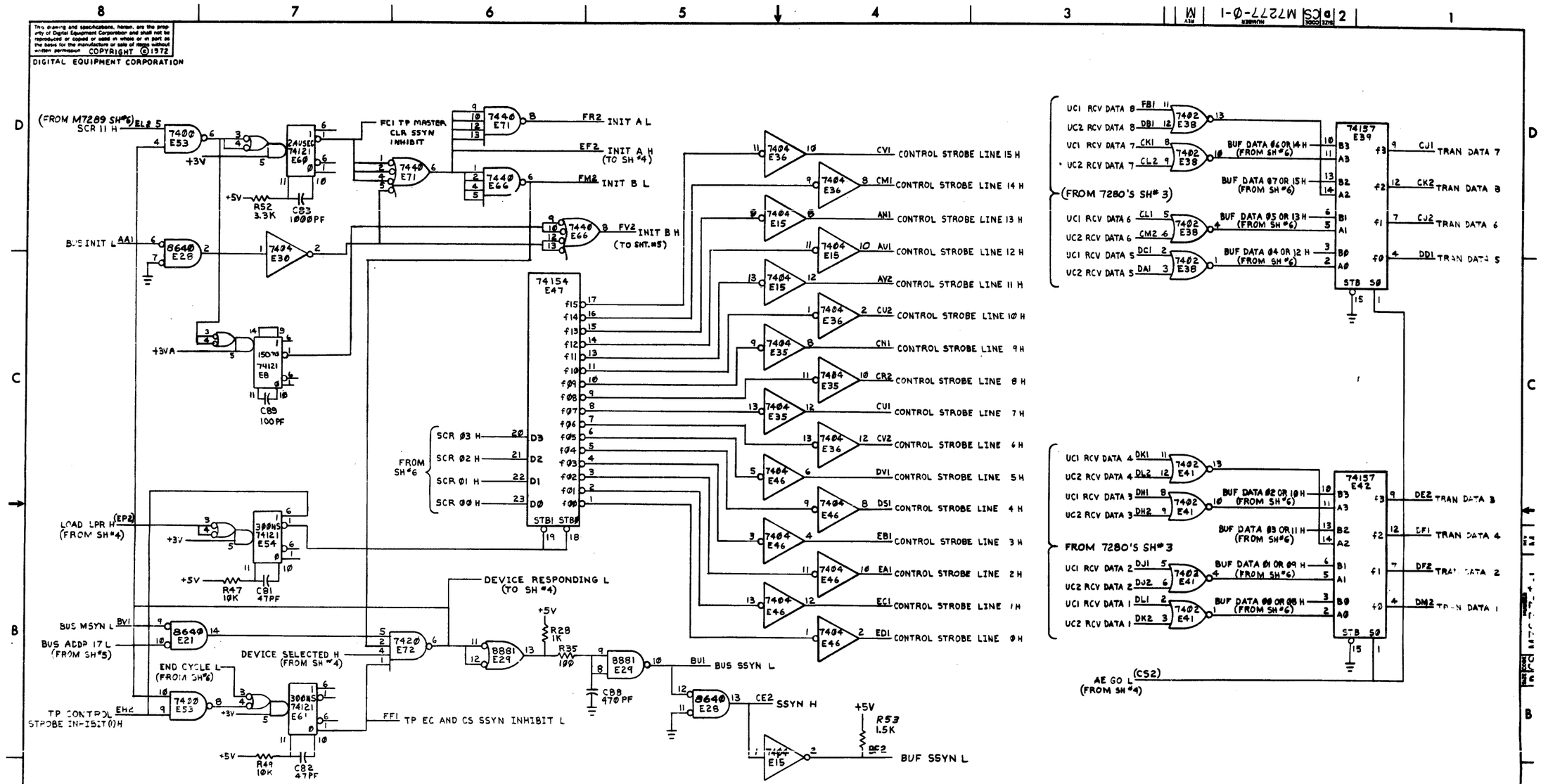

FIRST USED ON OPTION/MODEL	QTY.	DESCRIPTION	PART NO.	ITEM NO.
PDP 11		PARTS LIST		

UNLESS OTHERWISE SPECIFIED DIMENSION IN INCHES. TOLERANCES
DECIMALS .XXX = .005 .XX = .02 .X = .1
ANGLES ±0° 30'
REMOVE BURRS AND BREAK SHARP CORNERS SURFACE QUALITY ✓
MATERIAL
FINISH

DRAWN [redacted] DATE 8-21-72
CHECKED DATE
MFG DATE 6-7-72
QC DATE 7-12-72
ENGR DATE

[redacted] EQUIPMENT CORPORATION MAYNARD MASSACHUSETTS

TITLE CURRENT ADDRS & ADDRS SELECT

NEXT HIGHER ASSY. B-DD-DH11-0
SCALE
SHEET A OF B

SIZE D CODE CS NUMBER M7277-0-1 REV. FM

DRAWING 40 522 15840
REVISIONS REV CHANGE NO CHK
DEC FORM NO DRD 102-B

This drawing and specifications, herein, are the property of Digital Equipment Corporation and shall not be reproduced or copied or used in whole or in part as the basis for the manufacture or sale of items without written permission. COPYRIGHT © 1972
DIGITAL EQUIPMENT CORPORATION

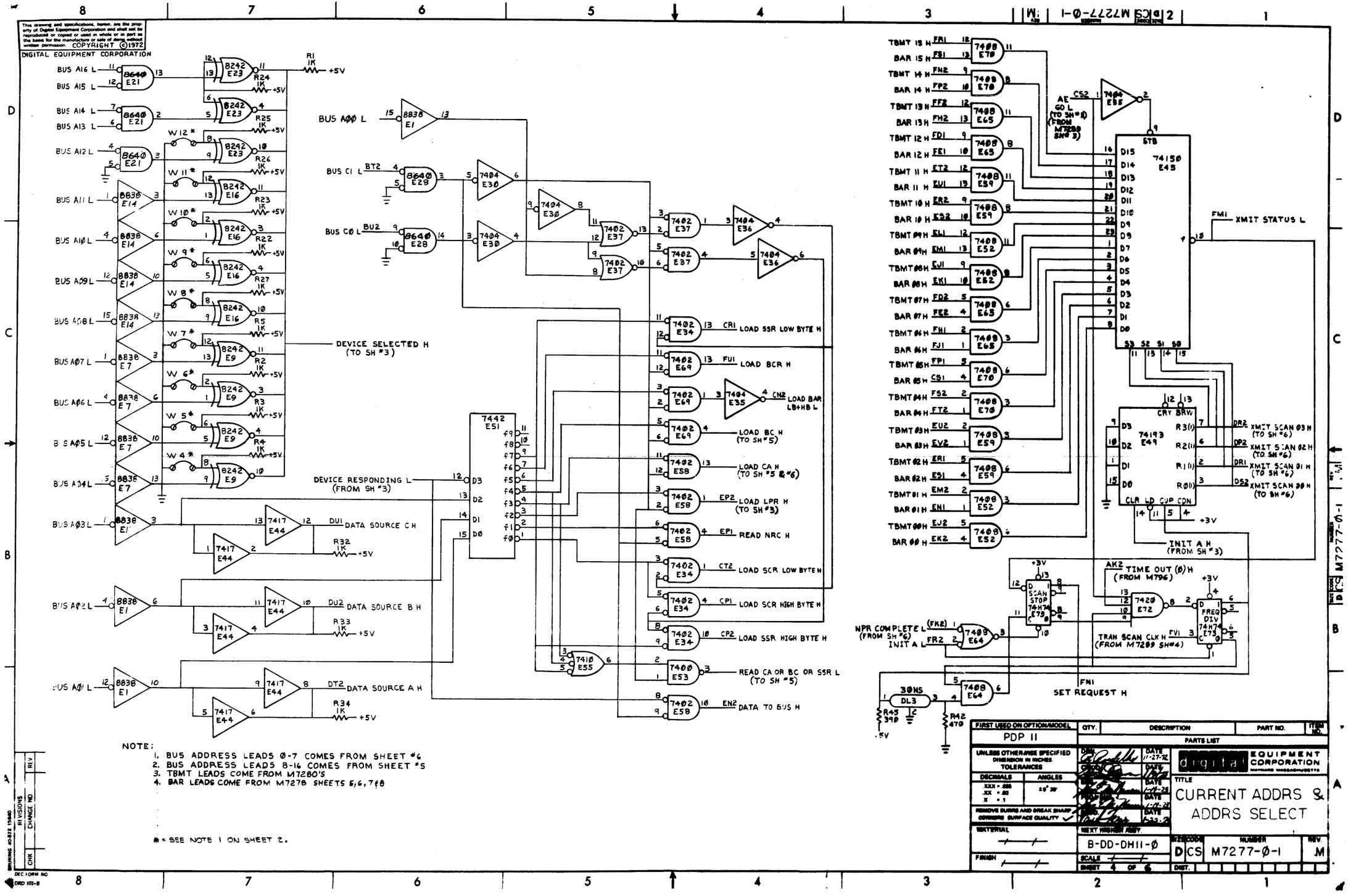

NOTE:
1. BUS ADDRESS LEADS 0-7 COMES FROM SHEET #6
2. BUS ADDRESS LEADS 8-16 COMES FROM SHEET #5
3. TBMT LEADS COME FROM M7280'S
4. BAR LEADS COME FROM M7278 SHEETS 5,6,7&8

* = SEE NOTE 1 ON SHEET 2.

FIRST USED ON OPTION/MODEL	QTY.	DESCRIPTION	PART NO.	ITEM NO.
PDP 11		PARTS LIST		

UNLESS OTHERWISE SPECIFIED DIMENSION IN INCHES. TOLERANCES: DECIMALS .XXX = .005, .XX = .02, .X = .1; ANGLES ±0° 30'. REMOVE BURRS AND BREAK SHARP CORNERS. SURFACE QUALITY ✓

MATERIAL —/— FINISH —/—

NEXT HIGHER ASSY. B-DD-DH11-0

SCALE —/— SHEET 4 OF 6

digital EQUIPMENT CORPORATION MAYNARD MASSACHUSETTS

TITLE CURRENT ADDRS & ADDRS SELECT

SIZE D CODE CS NUMBER M7277-0-1 REV. M

DIST.

REVISIONS: REV | CHANGE NO | CHK

DEC FORM NO DRD 102-B

This drawing and specifications, herein, are the property of Digital Equipment Corporation and shall not be reproduced or copied or used in whole or in part as the basis for the manufacture or sale of items without written permission. COPYRIGHT © 1972

DIGITAL EQUIPMENT CORPORATION

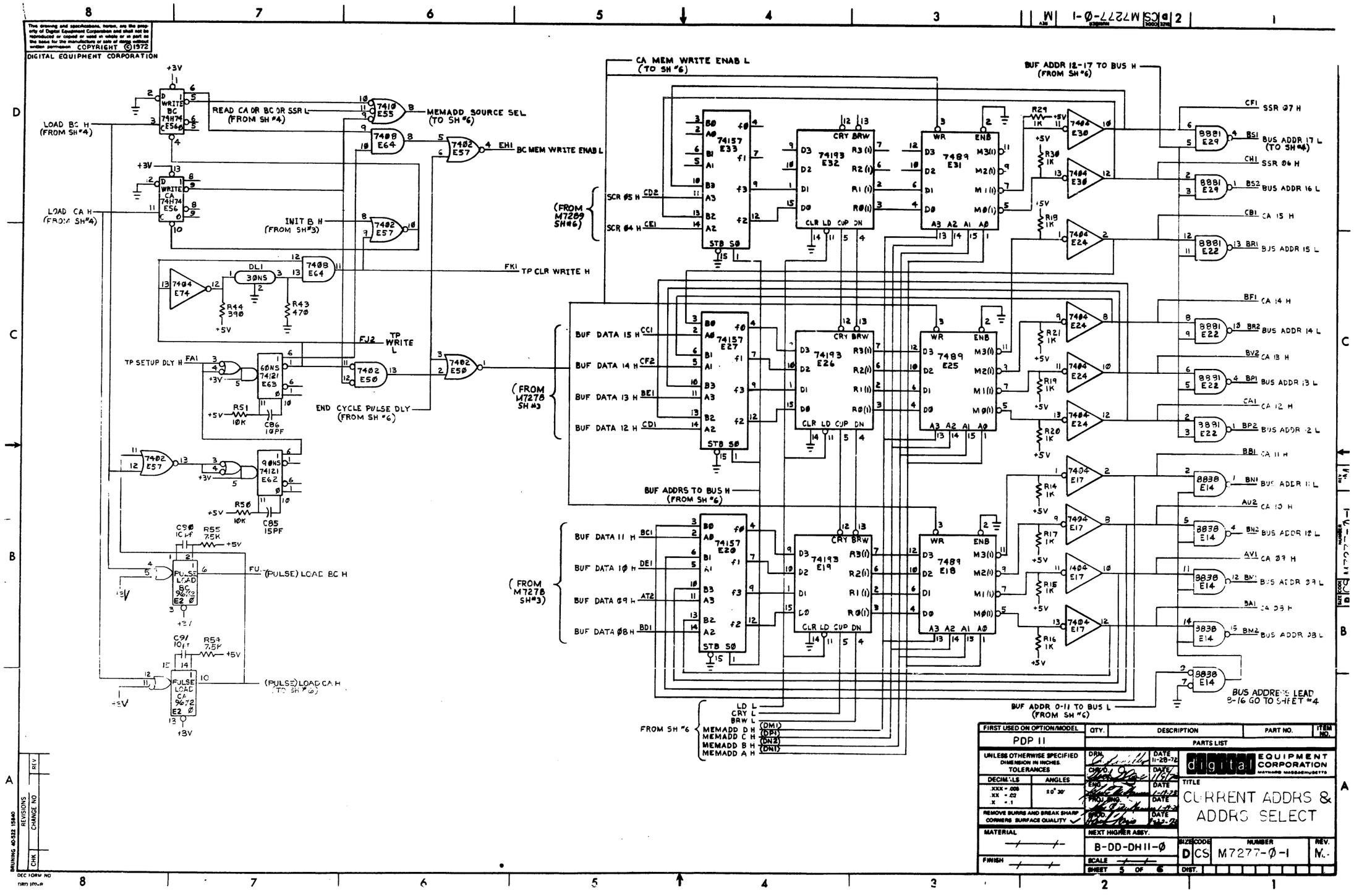

FIRST USED ON OPTION/MODEL	QTY.	DESCRIPTION	PART NO.	ITEM NO.
PDP 11		PARTS LIST		

UNLESS OTHERWISE SPECIFIED DIMENSION IN INCHES. TOLERANCES

DECIMALS	ANGLES
.XXX = .005	±0° 30'
.XX = .02	
.X = .1	

REMOVE BURRS AND BREAK SHARP CORNERS. SURFACE QUALITY ✓

MATERIAL —/—

FINISH —/—

		DATE
DRN.		11-28-72
CHK'D.		1/9/72
ENG.		
PROJ. ENG.		1-19-73
PROD.		1-23-73

digital EQUIPMENT CORPORATION MAYNARD MASSACHUSETTS

TITLE CURRENT ADDRS & ADDRS SELECT

NEXT HIGHER ASSY. B-DD-DH11-Ø

SCALE —/—

SHEET 5 OF 6

SIZE D CODE CS NUMBER M7277-Ø-1 REV. M

DIST.

REV	REVISIONS	CHANGE NO	CHK

BRUNING 40-522 15840

DEC FORM NO DIRD 107-B

This drawing and specifications, herein, are the property of Digital Equipment Corporation and shall not be reproduced or copied or used in whole or in part as the basis for the manufacture or sale of items without written permission. COPYRIGHT © 1972
DIGITAL EQUIPMENT CORPORATION

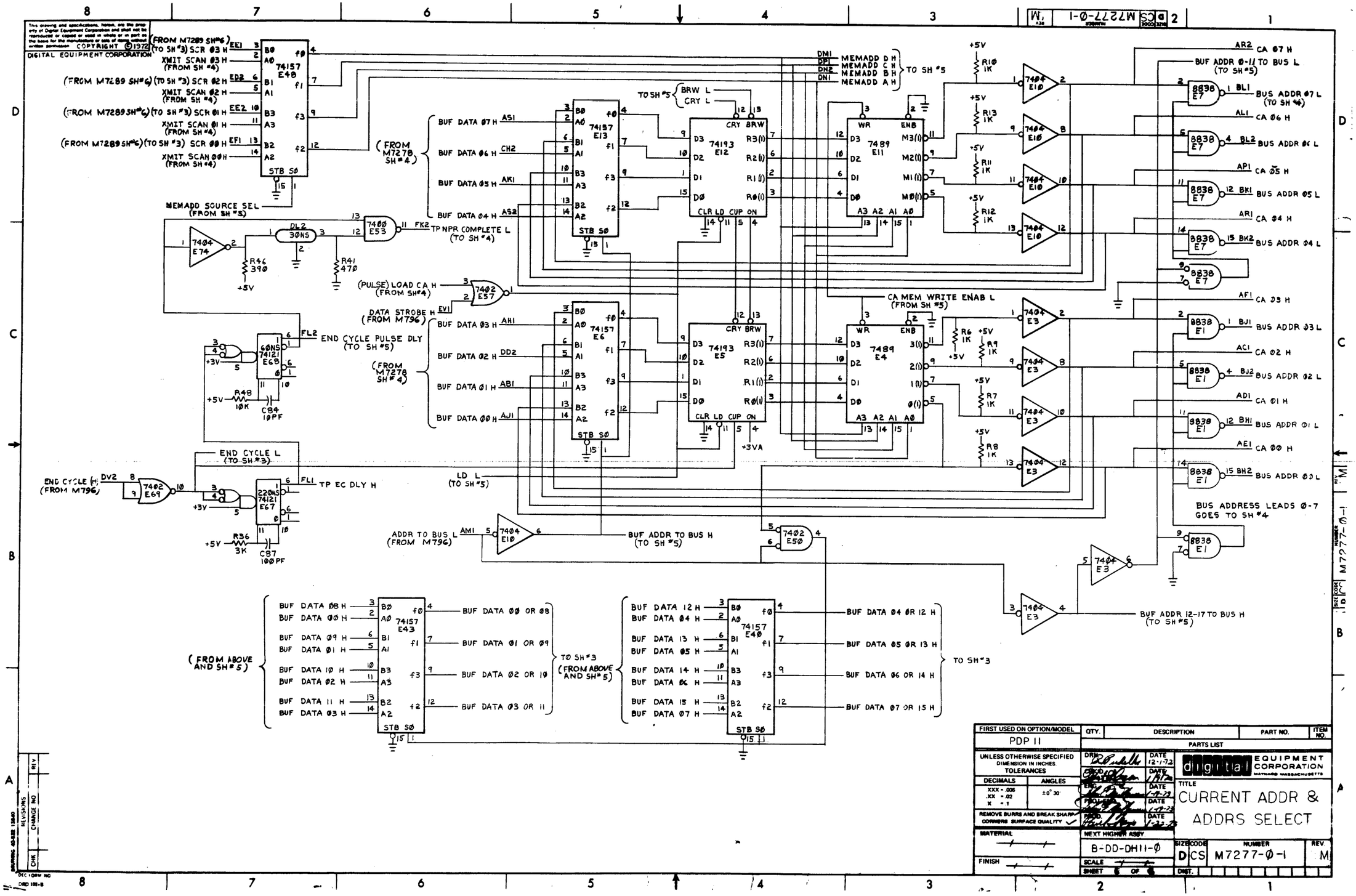

FIRST USED ON OPTION/MODEL	QTY.	DESCRIPTION	PART NO.	ITEM NO.
PDP 11		PARTS LIST		

UNLESS OTHERWISE SPECIFIED DIMENSION IN INCHES. TOLERANCES
DECIMALS: XXX = .005, .XX = .02, X = .1
ANGLES: ±0° 30'
REMOVE BURRS AND BREAK SHARP CORNERS SURFACE QUALITY ✓
MATERIAL
FINISH

DRN. DATE 12-1-72
CHKD. DATE
ENG. DATE
PROV. DATE
PROD. DATE

digital EQUIPMENT CORPORATION MAYNARD MASSACHUSETTS

TITLE CURRENT ADDR & ADDRS SELECT

NEXT HIGHER ASSY. B-DD-DH11-Ø
SCALE
SHEET OF

SIZE D CODE CS NUMBER M7277-Ø-1 REV. M
DIST.

REVISIONS: REV | CHANGE NO | CHK
DEC FORM NO DRD 100-B

PAGE REVISION CONTROL SHEET

SH NO.	PAGE REVISIONS																			REMARKS
1	A	B	C	D																UPDATE REV OF ALL SHEETS ON EACH ECO.
2	A	B	C	D																
3	A	B	C	D																
4	A	B	C	D																
5	A	B	C	D																
6	A	B	C	D																
7	A	B	C	D																
8	A	B	C	D																
ECO NO.	—	00001	00003	00004																
ETCH REV.		B	C	C																
ENG.	—																			
DATE	—	5-7-73	9-26-73																	

FIRST USED ON OPTION/MODEL

PDP 11

DRN.		DATE 12-15-72
CHK'D.		DATE 1/8/73
ENG.		DATE 1 19 73
PROJ. ENG.		DATE 1 19 73
PROD.		DATE 1-22-73

digital EQUIPMENT CORPORATION
MAYNARD MASSACHUSETTS

TITLE

REG & BYTE CNT

"THIS DRAWING AND SPECIFICATIONS, HEREIN, ARE THE PROPERTY OF DIGITAL EQUIPMENT CORPORATION AND SHALL NOT BE REPRODUCED OR COPIED OR USED IN WHOLE OR IN PART AS THE BASIS FOR THE MANUFACTURE OR SALE OF ITEMS WITHOUT WRITTEN PERMISSION.
COPYRIGHT © 1972 DIGITAL EQUIPMENT CORPORATION"

NEXT HIGHER ASSY. B-DD-DH11-Ø

SCALE NONE

SHEET 1 OF 8

SIZE	CODE	NUMBER	REV.
B	CS	M7278-Ø-1	D

DIST.

This drawing and specifications, herein, are the property of Digital Equipment Corporation and shall not be reproduced or copied or used in whole or in part as the basis for the manufacture or sale of items without written permission. © 1972

NOTES:

1. UNLESS OTHERWISE NOTED: RESISTANCE IS IN OHMS; CAPACITANCE IS IN PICOFARADS.

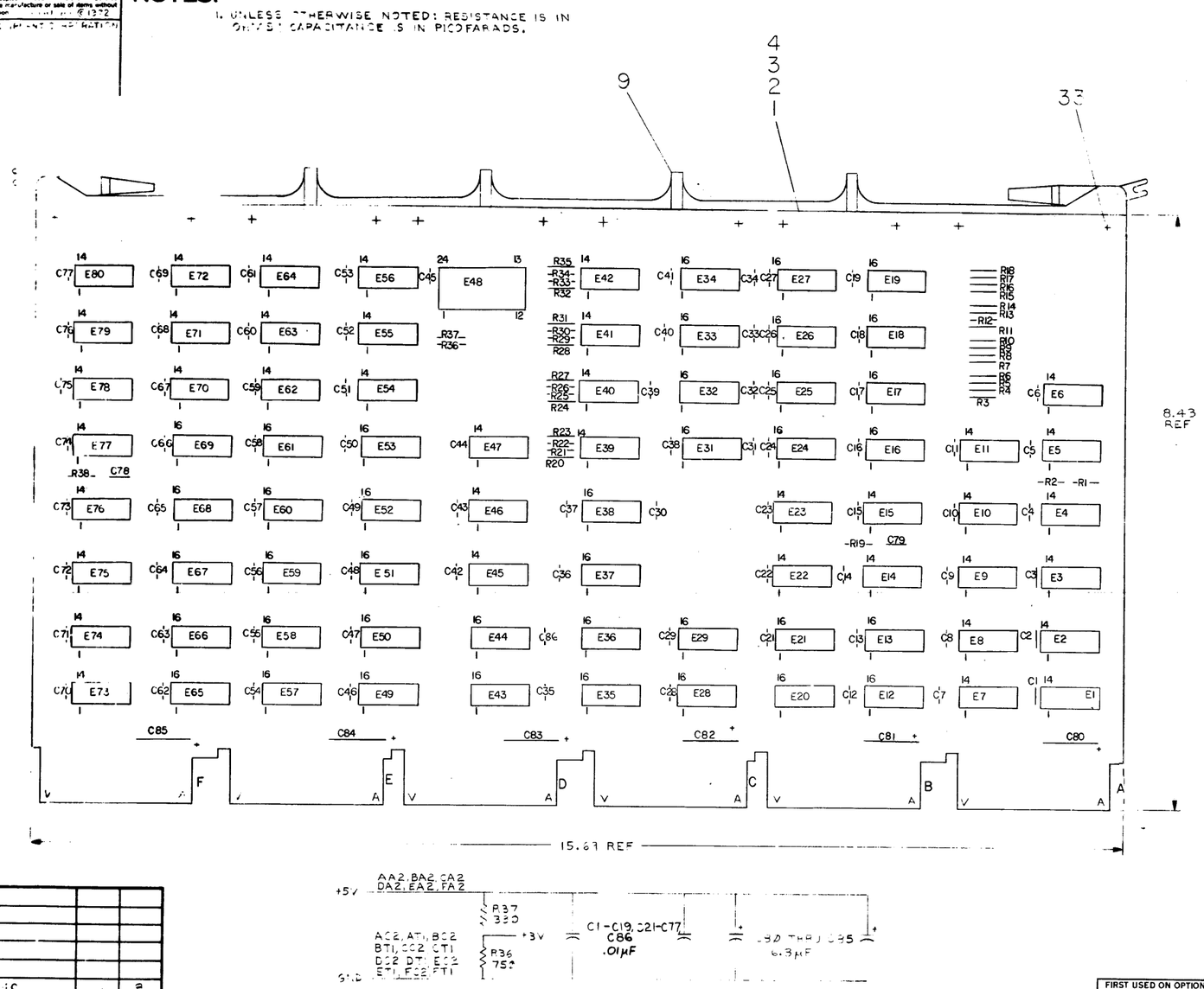

IC TYPE	GND	+5V
DEC 8641		2
DEC 7451	2	10
DEC 7454	2	24
DEC 7457	2	6
DEC 7475	2	4
DEC 7493	2	5
DEC 7421	2	6

GND AND 5V ARE USUALLY PIN 7 AND 14 RESPECTIVELY. EXCEPTIONS ARE STATED ABOVE

IC PIN LOCATIONS

QTY	REF DESIGNATION	DESCRIPTION	PART NO.	ITEM NO.
REF		X-Y COORDINATE HOLE LOCATION	K-CO-M7278-0-4	1
REF		ASSY/DRILLING HOLE LAYOUT	D-AH-M7278-0-5	2
REF		MODULE ECO HISTORY	B-MH-M7278-0-6	3
1		ETCHED CIRCUIT BOARD	5010247	4
1	C78	CAP 1000 PF 100V ± 5% D.M.	1000042	5
77	C1-C19, C21-C77, C86	CAP .01 MF 100V ± 20% DISC	1001610	6
1	C79	CAP 27 PF 100V ± 5% D.M.	1001739	7
6	C80 THRU C85	CAP 6.8 MF 35V ± 10% S. TANT	1005306	8
1		HANDLE MODULE	1210711-2	9
1	R37	RES 330 1/4W ± 5%	1300295	10
34	R1 THRU R18, R20 THRU R35	RES 1K 1/4W ± 5%	1300365	11
1	R38	RES 1.5K 1/4W ± 5%	1300391	12
1	R19	RES 2.2K 1/4W ± 5%	1300417	13
1	R36	RES 750 1/4W ± 5%	1301401	14
8	E54, E55, E62, E63, E70, E71, E78, E79	I.C. DEC 7474	1905547	15
4	E45, E48, E75, E76	I.C. DEC 7400	1905575	16
1	E15	I.C. DEC 7420	1905577	17
1	E47	I.C. DEC 7402	1909004	18
4	E3, E4, E9, E10	I.C. DEC 8641	1911469	19
4	E39 THRU E42	I.C. DEC 7404	1909686	20
1	E48	I.C. DEC 74154	1909701	21
4	E1, E2, E7, E8	I.C. DEC 8881	1909705	22
2	E22, E23	I.C. DEC 8815	1909713	23
3	E5, E6, E11	I.C. DEC 7417	1909929	24
16	E12, E13, E20, E21, E28, E29, E35, E36, E43, E44, E49, E50, E57, E58, E65, E66	I.C. DEC 74151	1909936	25
4	E24 THRU E27	I.C. DEC 74193	1910018	26
2	E73, E74	I.C. DEC 7437	1910091	27
4	E56, E64, E72, E80	I.C. DEC 7403	1910155	28
2	E14, E77	I.C. DEC 74121	1910230	29
4	E31 THRU E34	I.C. DEC 7489	1910396	30
11	E37, E38, E51, E52, E53, E59, E60, E61, E67, E68, E69	I.C. DEC 74175	1910651	31
4	E16 THRU E19	I.C. DEC 74157	1910855	32
12		EYELET (SS-4-7)	9006732	33

PARTS LIST

FIRST USED ON OPTION MODEL: PDP 11

ETCH BOARD REV: C

CHK	REVISIONS	CHANGE NO.	REV

DEC NO.	EIA NO.	DEC NO.	EIA NO.

SEMICONDUCTOR CONVERSION CHART

DRN. DATE 1-7-72
CHKD. DATE 11/5/72
ENG. DATE
PROJ. ENG. DATE
MGR. DATE 1-20-72

NEXT HIGHER ASSY: B-DD-DH11-0

SCALE: NONE

SHEET 2 OF

digital EQUIPMENT CORPORATION MAYNARD, MASSACHUSETTS

TITLE: REG & BYTE CNT

SIZE D | CODE CS | NUMBER M7278-0-1 | REV. D

DIST.

DEC FORM NO URD-135A

This drawing and specifications, herein, are the property of Digital Equipment Corporation and shall not be reproduced or copied or used in whole or in part as the basis for the manufacture or sale of items without written permission. COPYRIGHT © 1972
DIGITAL EQUIPMENT CORPORATION

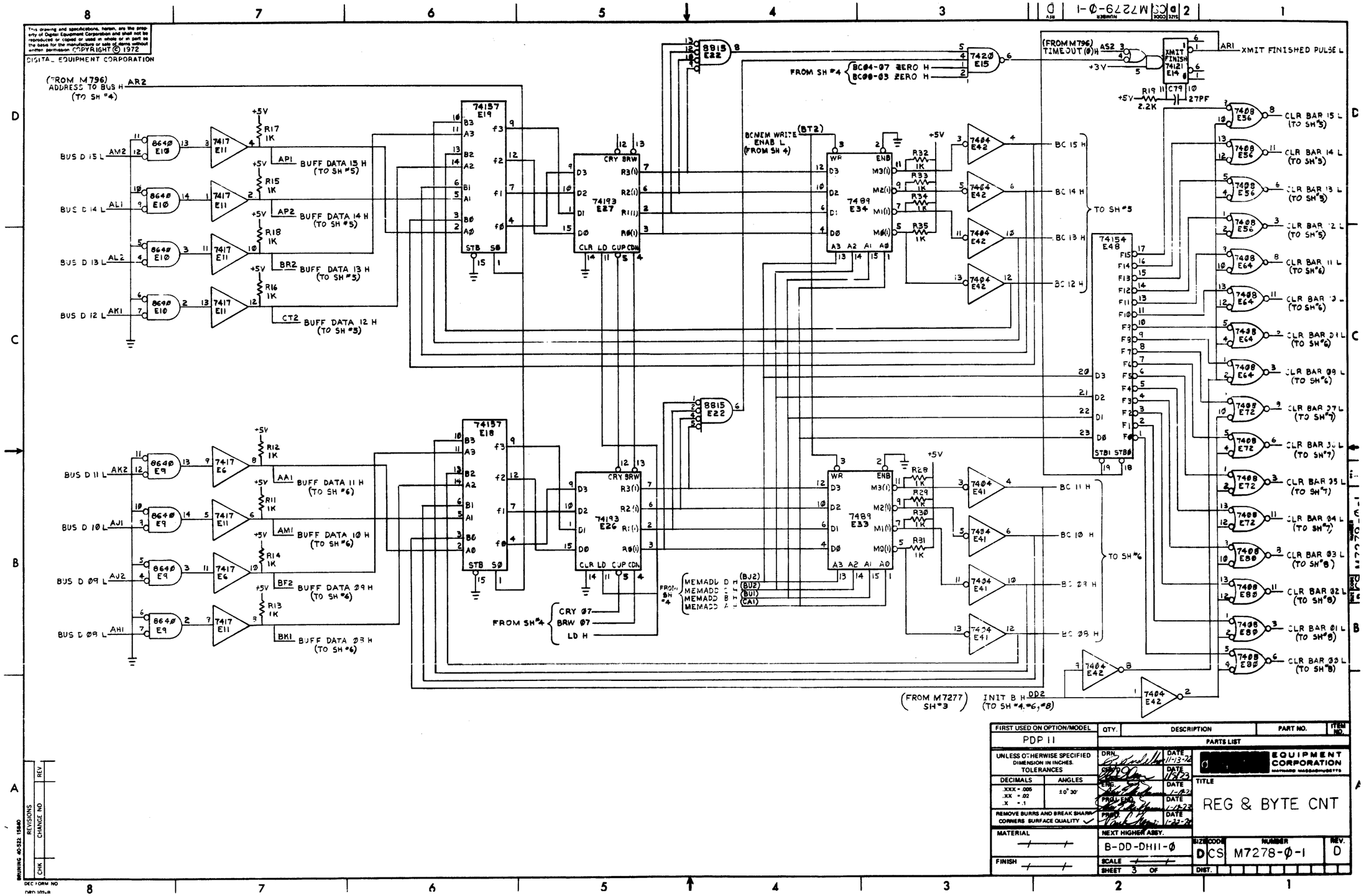

FIRST USED ON OPTION/MODEL	QTY.	DESCRIPTION	PART NO.	ITEM NO.
PDP 11		PARTS LIST		

UNLESS OTHERWISE SPECIFIED DIMENSION IN INCHES. TOLERANCES

DECIMALS	ANGLES
.XXX ± .005 .XX ± .02 .X ± .1	±0° 30'

REMOVE BURRS AND BREAK SHARP CORNERS SURFACE QUALITY ✓

MATERIAL —

FINISH —

		DATE
DRN.		11-13-72
CHKD.		1/5/73
ENG.		1-12-73
PROJ. ENG.		1-12-73
PROD.		1-22-73

NEXT HIGHER ASSY. B-DD-DH11-Ø

SCALE —

SHEET 3 OF

DIST.

EQUIPMENT CORPORATION MAYNARD MASSACHUSETTS

TITLE REG & BYTE CNT

SIZE D CODE CS NUMBER M7278-Ø-1 REV. D

REV	REVISIONS	CHK
	CHANGE NO	

DRAWING 40-522 15840

DEC FORM NO

This drawing and specifications, herein, are the property of Digital Equipment Corporation and shall not be reproduced or copied or used in whole or in part as the basis for the manufacture or sale of items without written permission COPYRIGHT © 1972
DIGITAL EQUIPMENT CORPORATION

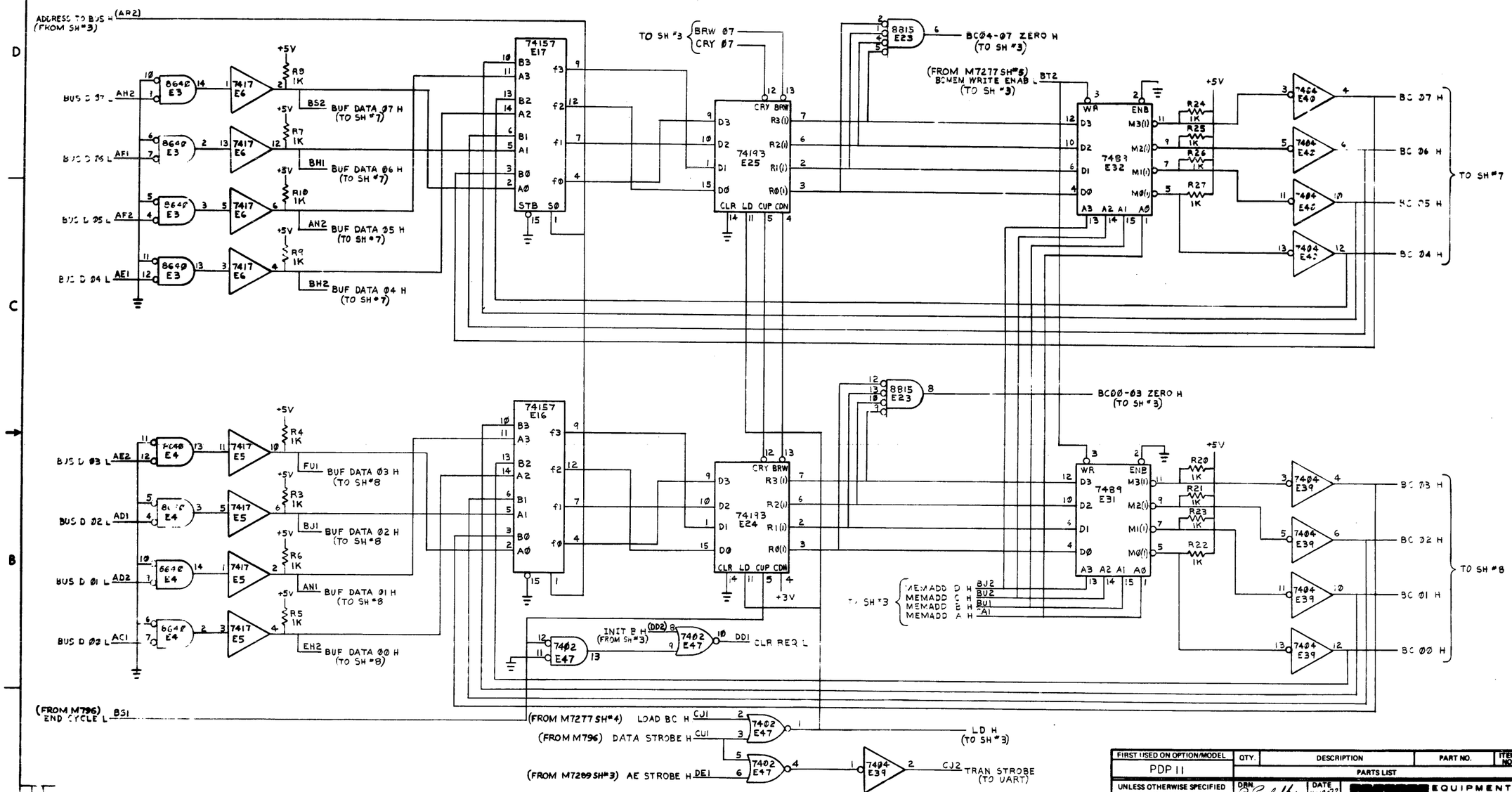

FIRST USED ON OPTION/MODEL	QTY.	DESCRIPTION	PART NO.	ITEM NO.
PDP 11		PARTS LIST		

UNLESS OTHERWISE SPECIFIED DIMENSION IN INCHES. TOLERANCES

DECIMALS	ANGLES
.XXX = .005 .XX = .02 .X = .1	±0° 30'

REMOVE BURRS AND BREAK SHARP CORNERS SURFACE QUALITY ✓

MATERIAL

FINISH

		DATE
DRN	R. Reddy	11-14-72
PROJ. ENG.		1-19-73
ENG.		1-19-73
PROD. ENG.		1-19-73
PROD.		1-22-73

NEXT HIGHER ASSY. B-DD-DH11-0

SCALE

SHEET 4 OF

digital EQUIPMENT CORPORATION MAYNARD MASSACHUSETTS

TITLE REG & BYTE CNT

SIZE	CODE	NUMBER	REV.
D	CS	M7278-0-1	D

DIST.

REVISIONS: REV / CHANGE NO / CHK

DEC FORM NO DRD 103-B

THE DRAWING AND SPECIFICATIONS HEREIN ARE THE PROPERTY OF DIGITAL EQUIPMENT CORPORATION AND SHALL NOT BE REPRODUCED OR COPIED OR USED IN WHOLE OR IN PART AS THE BASIS FOR THE MANUFACTURE OR SALE OF ITEMS WITHOUT WRITTEN PERMISSION. ©1972 DIGITAL EQUIPMENT CORPORATION

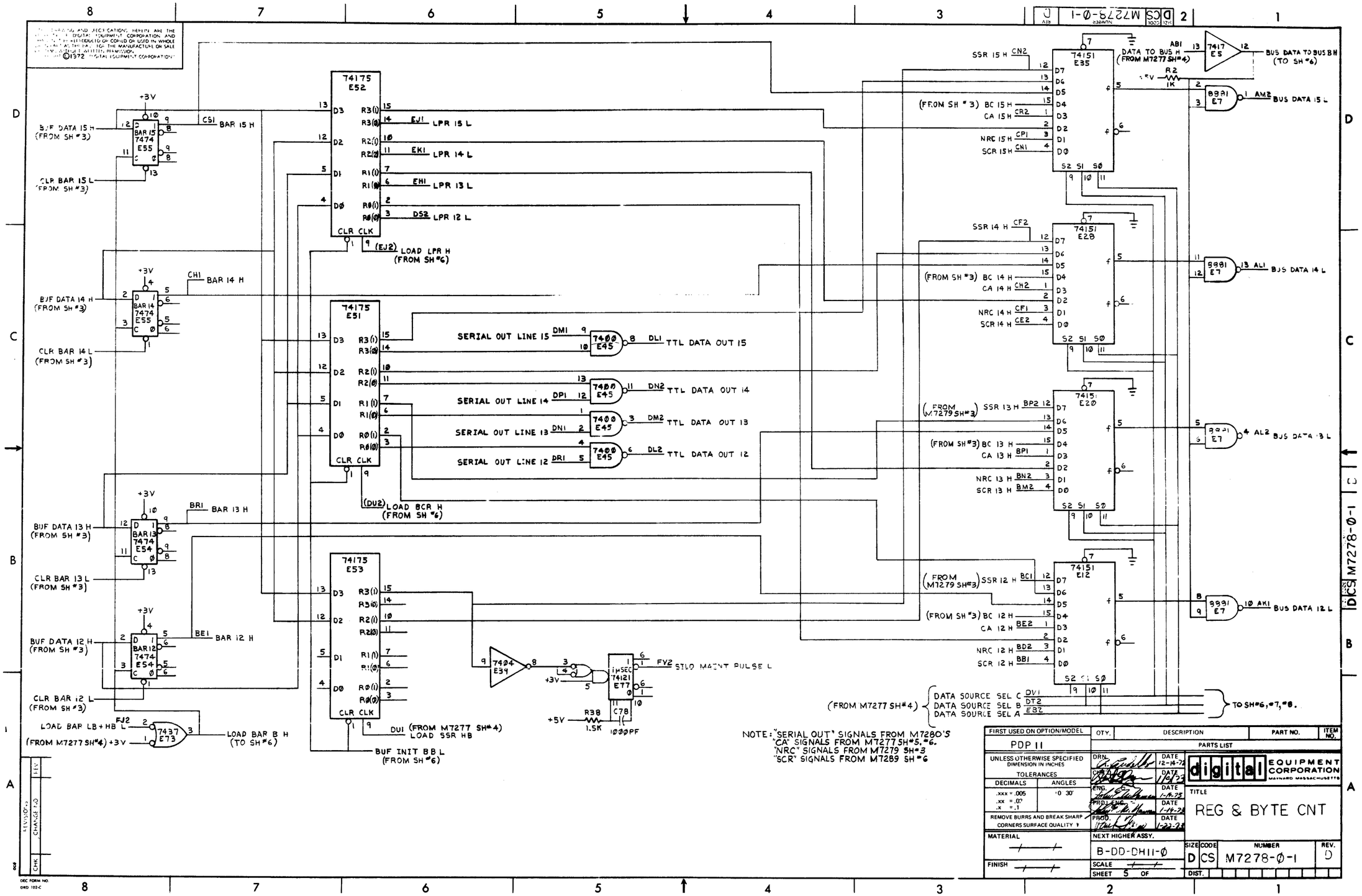

THIS DRAWING AND SPECIFICATIONS, HEREIN, ARE THE PROPERTY OF DIGITAL EQUIPMENT CORPORATION AND SHALL NOT BE REPRODUCED OR COPIED OR USED IN WHOLE OR IN PART AS THE BASIS FOR THE MANUFACTURE OR SALE OF ITEMS WITHOUT WRITTEN PERMISSION.
COPYRIGHT © 1972 DIGITAL EQUIPMENT CORPORATION

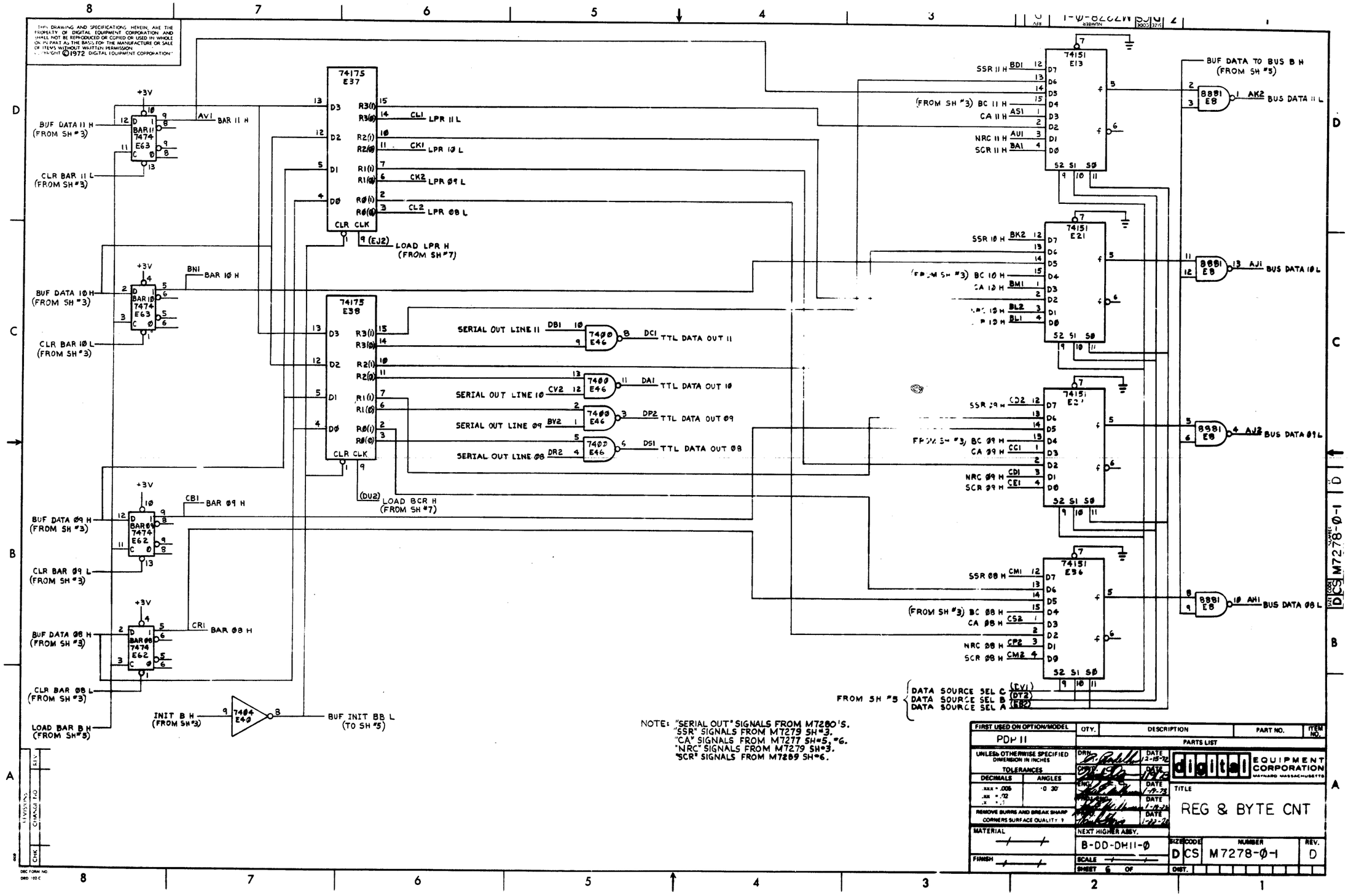

NOTE: "SERIAL OUT" SIGNALS FROM M7280'S.
"SSR" SIGNALS FROM M7279 SH #3.
"CA" SIGNALS FROM M7277 SH #5, #6.
"NRC" SIGNALS FROM M7279 SH #3.
"SCR" SIGNALS FROM M7289 SH #6.

FIRST USED ON OPTION/MODEL	QTY.	DESCRIPTION	PART NO.	ITEM NO.
PDP 11		PARTS LIST		

UNLESS OTHERWISE SPECIFIED DIMENSION IN INCHES
TOLERANCES: DECIMALS .XXX = .005, .XX = .02, .X = .1; ANGLES ±0 30'
REMOVE BURRS AND BREAK SHARP CORNERS SURFACE QUALITY 1
MATERIAL
FINISH

DRN. DATE 12-15-72
DSGN. DATE 12-15-72
ENGR. DATE 1-9-73
MANUFACTURING DATE 1-18-73
QUALITY DATE 1-23-73

digital EQUIPMENT CORPORATION MAYNARD MASSACHUSETTS

TITLE: REG & BYTE CNT

NEXT HIGHER ASSY. B-DD-DH11-0
SCALE
SHEET 6 OF

SIZE	CODE	NUMBER	REV.
D	CS	M7278-0-1	D

DIST.

REVISIONS: REV. | CHANGE NO. | CHK

DEC FORM NO. DRD 102 C

This drawing and specifications, herein, are the property of Digital Equipment Corporation and shall not be reproduced or copied or used in whole or in part as the basis for the manufacture or sale of items without written permission COPYRIGHT © 1972
DIGITAL EQUIPMENT CORPORATION

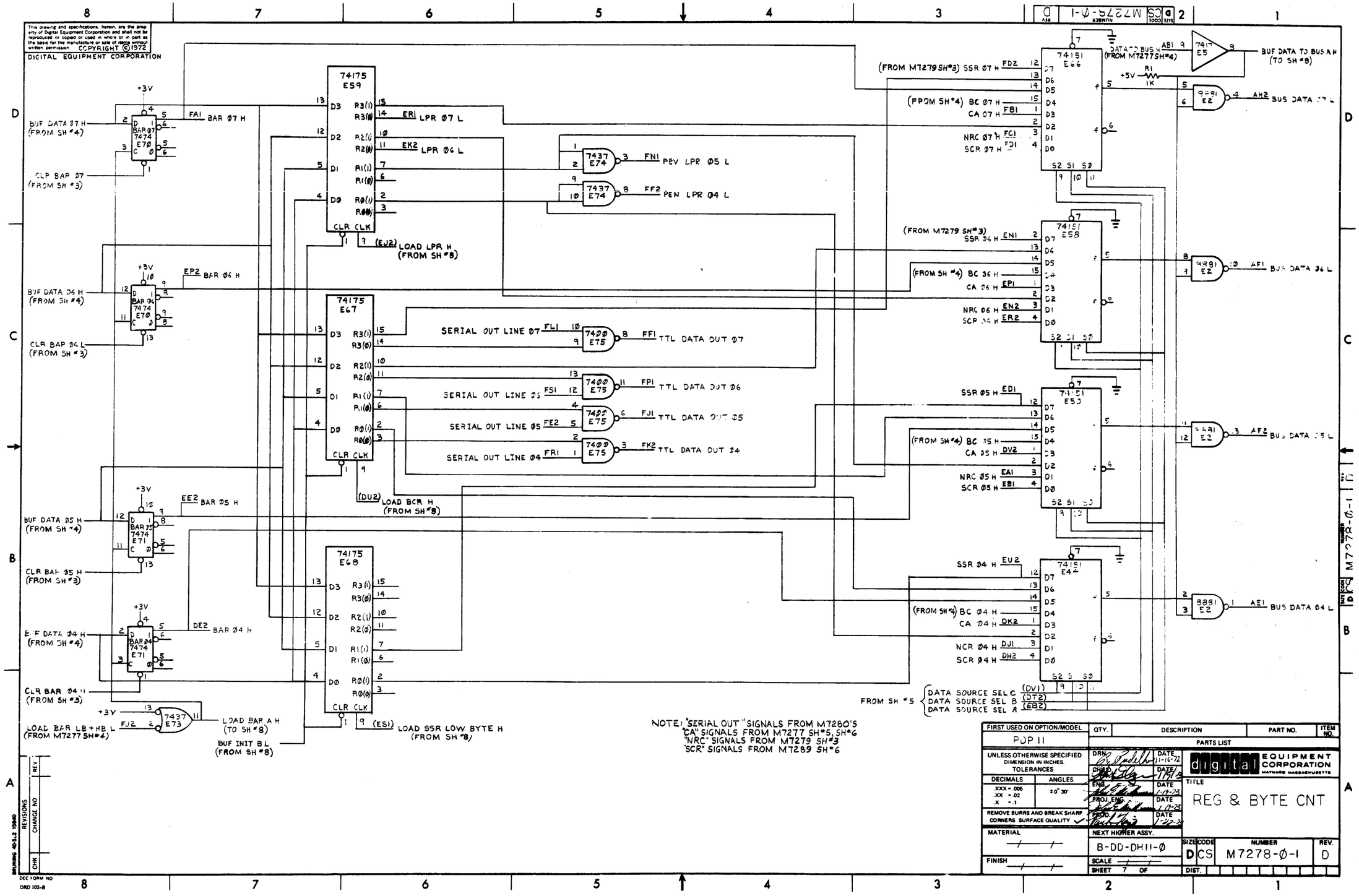

THIS DRAWING AND SPECIFICATIONS, HEREIN, ARE THE PROPERTY OF DIGITAL EQUIPMENT CORPORATION AND SHALL NOT BE REPRODUCED OR COPIED OR USED IN WHOLE OR IN PART AS THE BASIS FOR THE MANUFACTURE OR SALE OF ITEMS WITHOUT WRITTEN PERMISSION.
COPYRIGHT © 1972, DIGITAL EQUIPMENT CORPORATION

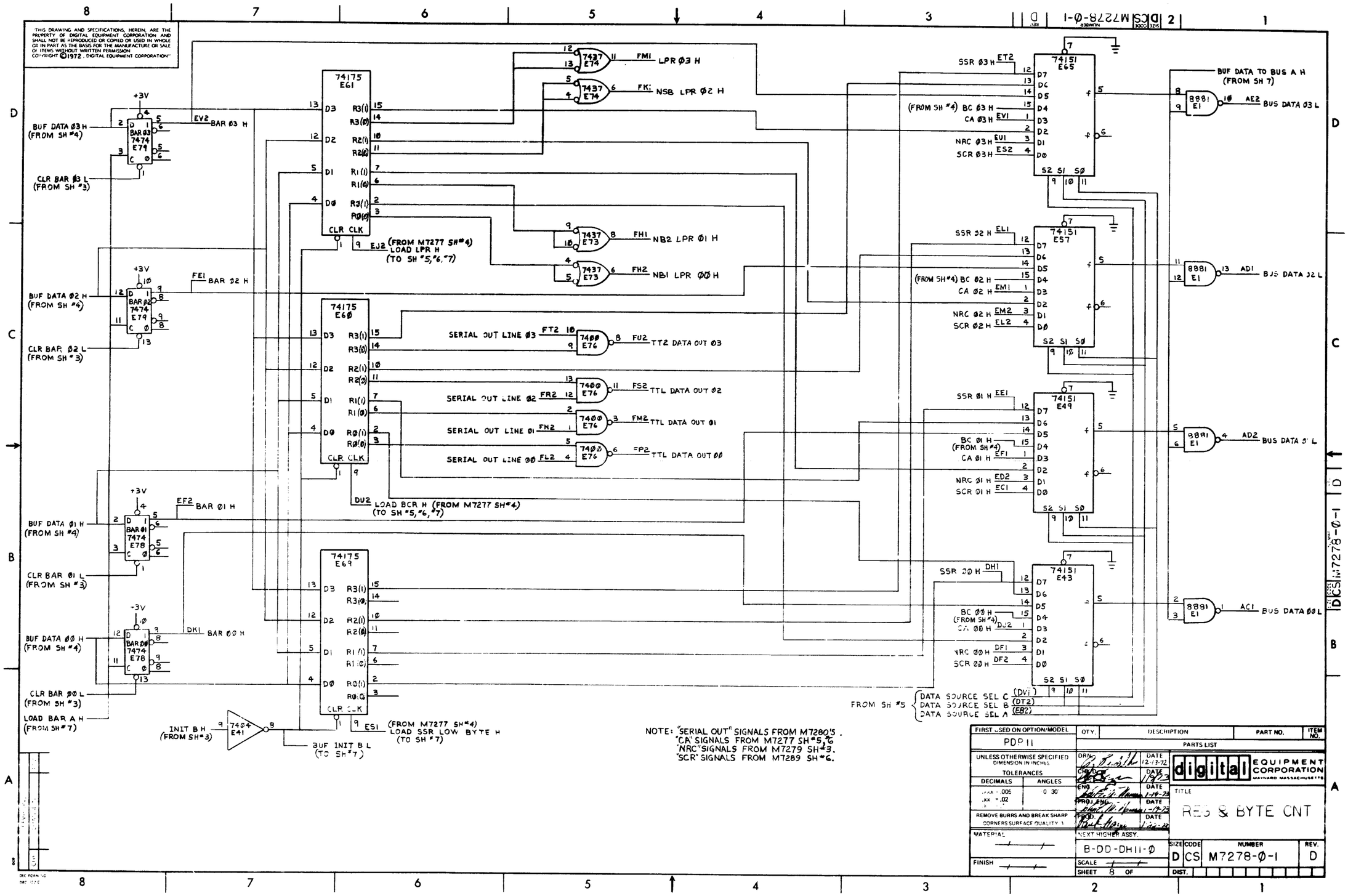

This drawing and specifications, herein, are the property of Digital Equipment Corporation and shall not be reproduced or copied or used in whole or in part as the basis for the manufacture or sale of items without written permission. COPYRIGHT © 1972
DIGITAL EQUIPMENT CORPORATION

NOTES:

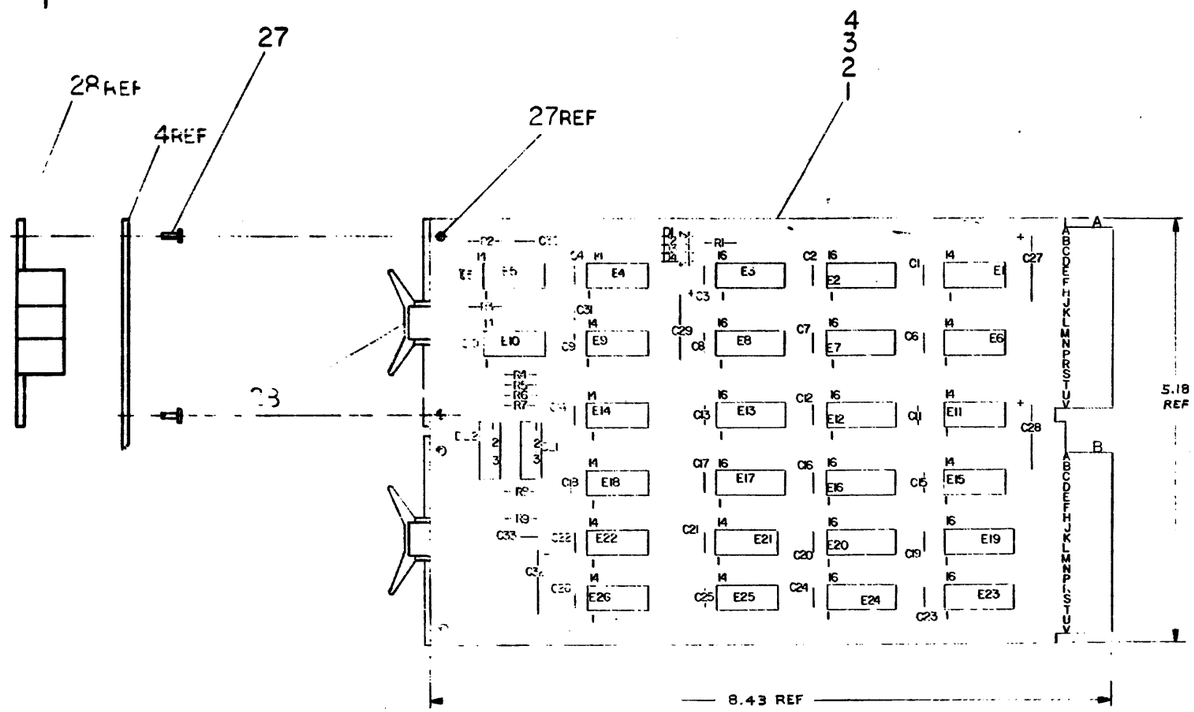

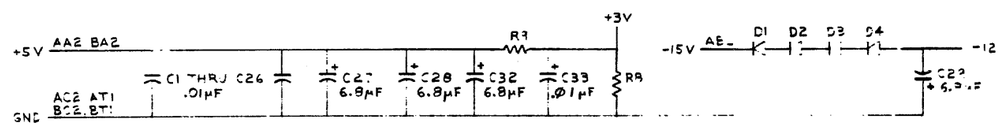

REF				
REF		X-Y COORDINATE HOLE LOCATION	K-CO-M7279-0-4	1
REF		ASSY/DRILLING HOLE LAYOUT	D-AH-M7279-0-5	2
REF		MODULE ECO HISTORY	B-MH-M7279-0-6	3
1		ETCHED CIRCUIT BOARD	5010248	4
1	C30	CAP 100 PF 100V 5%	1000016	5
4	C27,C28,C29,C32	CAP 6.8 MFD 35V 20% S. TANT	1000067	6
27	C1-C26,C33	CAP .01 MFD 100V 20% DISC	1001610	7
1	C31	CAP 15 PF 100V 5%	1002427	8
4	D1-D4	DIODE D664	1100114	9
3	R4,R5,R9	RES 330 1/4W 5%	1300295	10
2	R6,R7	RES 470 1/4W 5%	1300318	11
1	R1	RES 1K 1/4W 5%	1300365	12
1	R2	RES 2.2K 1/4W 5%	1300417	13
1	R8	RES 750 1/4W 5%	1301401	14
1	R3	RES 7.5K 1/4W 5%	1301422	15
2	DL1,DL2	DELAY LINE 30NS	1605528	16
1	E14	I.C. DEC 7400	1905575	17
1	E9	I.C. DEC 7420	1905577	18
4	E1,E6,E11,E26	I.C. DEC 7402	1909004	19
3	E18,E21,E25	I.C. DEC 74H74	1909667	20
3	E4,E15,E22	I.C. DEC 7404	1909686	21
2	E20,E24	I.C. DEC 74193	1910018	22
2	E19,E23	I.C. DEC 7485	1910224	23
2	E5,E10	I.C. DEC 74121	1910230	24
4	E2,E7,E12,E16	I.C. DEC 74157	1910655	25
4	E3,E8,E13,E17	I.C. DEC 3341		26
4		EYELETS	9006732	27
2		HANDLE FLIP CHIP MAGENTA	9008337 6	28

3341	8	16
DEC 7485	8	16
DEC 7413	8	16
DEC 7415	8	5
IC TYPE	GND	+ 5V

GND AND 5V ARE USUALLY PIN 7 AND 14 RESPECTIVELY EXCEPTIONS ARE STATED ABOVE

IC PIN LOCATIONS

FIRST USED ON OPTION MODEL
PDP 11

QTY	REF DESIGNATION	DESCRIPTION	PART NO.	ITEM NO.

PARTS LIST

ETCH BOARD REV C

REV	CHANGE NO.
B	M7279-0(X)01
A	ORIGINAL

J. MCNAMARA

DEC NO.	EIA NO.	DEC NO.	EIA NO.
		[illegible]	[illegible]

SEMICONDUCTOR CONVERSION CHART

DRN. DATE 10-26-72
CHKD. DATE
ENG. DATE
PROJ. ENG. DATE
PROD. DATE

NEXT HIGHER ASSY B-DD-DH11-0

SCALE NONE
SHEET 1 OF 3

[redacted] EQUIPMENT CORPORATION
MAYNARD, MASSACHUSETTS

TITLE FIFO BUFFER

SIZE CODE DCS NUMBER M7279-0-1 REV. B
DIST.

DRAWING 40-522 16499
DEC FORM NO. DRD-135A

This drawing and specifications, herein, are the property of Digital Equipment Corporation and shall not be reproduced or copied or used in whole or in part as the basis for the manufacture or sale of items without written permission. COPYRIGHT © 1972

DIGITAL EQUIPMENT CORPORATION

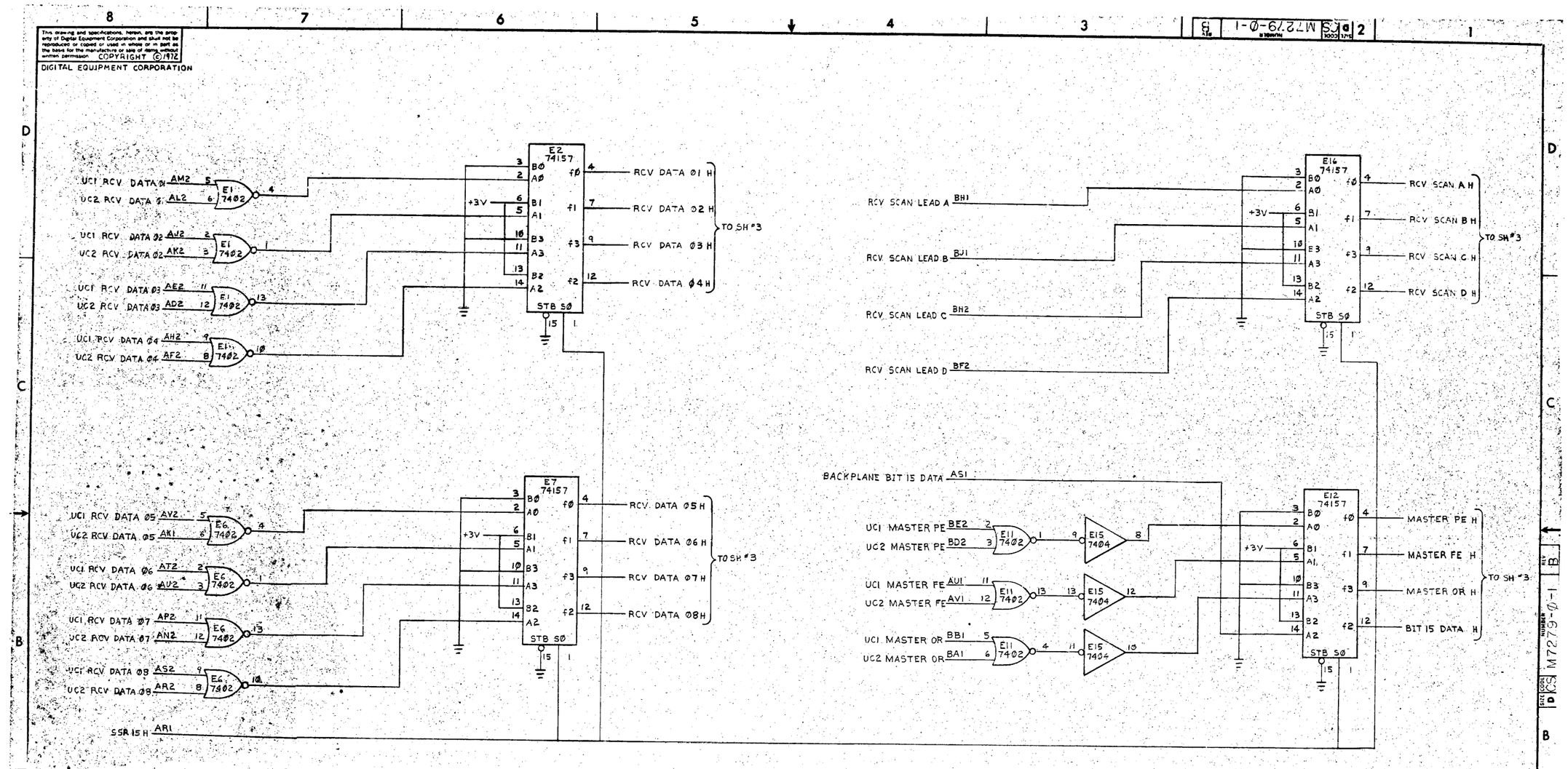

FIRST USED ON OPTION/MODEL	QTY.	DESCRIPTION	PART NO.	ITEM NO.
PDP 11		PARTS LIST		

UNLESS OTHERWISE SPECIFIED DIMENSION IN INCHES, TOLERANCES

DECIMALS	ANGLES
.XXX = .005 .XX = .02 .X = .1	±0° 30'

REMOVE BURRS AND BREAK SHARP CORNERS SURFACE QUALITY ✓

MATERIAL

FINISH

DRN		DATE 11-13-72
CHK'D		DATE 12/1/72
ENG		DATE 12/1/72
PROJ ENG		DATE 12/1/72
PROD		DATE 12-1-72

digital EQUIPMENT CORPORATION MAYNARD MASSACHUSETTS

NEXT HIGHER ASSY B-DD-D11-0

SCALE

SHEET 2 OF 3

TITLE FIFO BUFFER

SIZE	CODE	NUMBER	REV.
D	CS	M7279-0-1	B

DIST.

REVISIONS			
CHG	CHANGE NO.		REV
	M 727 900001		B

J. MCNAMARA

DRAWING No 322 1980

DEC FORM No

SIZE D CODE CS NUMBER M7279-0-1 REV B

This drawing and specifications, herein, are the property of Digital Equipment Corporation and shall not be reproduced or copied or used in whole or in part as the basis for the manufacture or sale of items without written permission. COPYRIGHT © 1972

DIGITAL EQUIPMENT CORPORATION

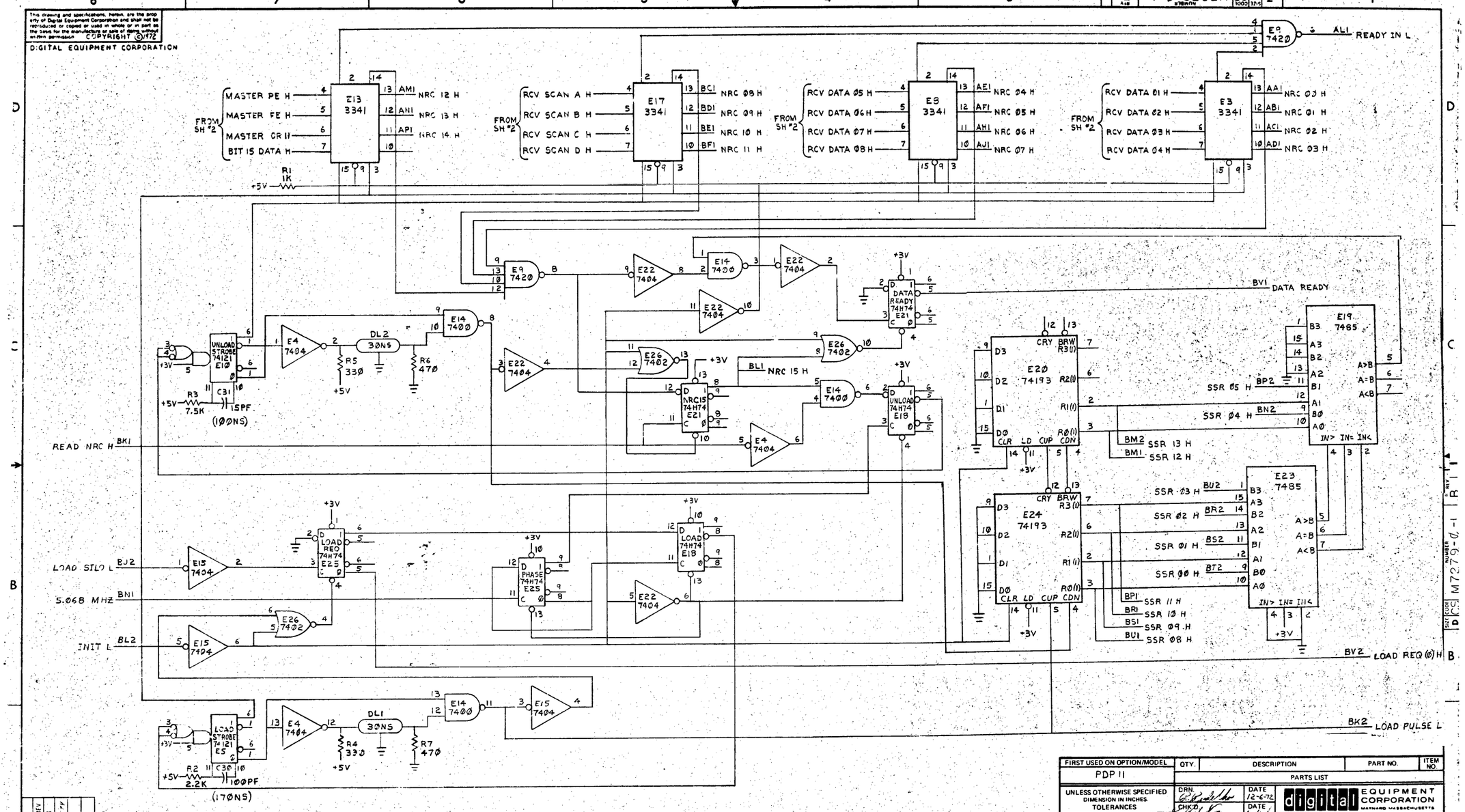

FIRST USED ON OPTION/MODEL	QTY.	DESCRIPTION	PART NO.	ITEM NO.
PDP 11		PARTS LIST		

UNLESS OTHERWISE SPECIFIED DIMENSION IN INCHES TOLERANCES

DECIMALS	ANGLES
.XXX = .005 .XX = .02 .X = .1	±0° 30'

REMOVE BURRS AND BREAK SHARP CORNERS SURFACE QUALITY ✓

MATERIAL

FINISH

DRN.	DATE 12-6-72	digital EQUIPMENT CORPORATION MAYNARD MASSACHUSETTS
CHK'D	DATE	
ENG.	DATE	TITLE FIFO BUFFER
PROJ. ENG.	DATE	
PROD.	DATE	
NEXT HIGH: R ASSY. B-DD-DH11-0		
SCALE		
SHEET		

SIZE	CODE	NUMBER	REV.
D	CS	M7279-0-1	B

DIST.

REVISIONS			
CHK	CHANGE NO		REV
	M7279-00001		B
		J MCNAMARA	

BRIJNING 40-322 15840

DEC FORM NO DRD 102-B

PAGE REVISION CONTROL SHEET

SH NO.	PAGE REVISIONS																			REMARKS
1	*	A	B																	UPDATE REVISION LETTER ON ALL SHEETS, ON EACH E.C.O.
2	*	A	B																	
3	*	A	B																	
4	*	A	B																	
5	*	A	B																	
6	*	A	B																	
7	*	A	B																	
8	*	A	B																	
9	*	A	B																	
10	*	A	B																	
11	*	A	B																	
ECO NO.		00001	00002																	
ETCH REV.	A	A	B																	
ENG.																				
DATE	12/6/72	4/23/73	3-15-74																	FIRST USED ON OPTION/MODEL: PDP 11

DRN.		DATE	12-6-72
CHK'D.		DATE	
ENG.		DATE	12/12/72
PROJ. ENG.		DATE	12/12/72
PROD.		DATE	

digital EQUIPMENT CORPORATION
MAYNARD MASSACHUSETTS

TITLE: DHII LINE PARAMETER CONTROL

NEXT HIGHER ASSY.: B-DD-DHII-Ø

SCALE: —/—

SHEET 1 OF 11

SIZE	CODE	NUMBER	REV.
B	CS	M7288-Ø-1	B

DIST.

"THIS DRAWING AND SPECIFICATIONS, HEREIN, ARE THE PROPERTY OF DIGITAL EQUIPMENT CORPORATION AND SHALL NOT BE REPRODUCED OR COPIED OR USED IN WHOLE OR IN PART AS THE BASIS FOR THE MANUFACTURE OR SALE OF ITEMS WITHOUT WRITTEN PERMISSION.
COPYRIGHT © 1972 DIGITAL EQUIPMENT CORPORATION"

This drawing and specifications, herein, are the property of Digital Equipment Corporation and shall not be reproduced or copied or used in whole or in part as the basis for the manufacture or sale of items without written permission. COPYRIGHT © 1972
DIGITAL EQUIPMENT CORPORATION

NOTES:

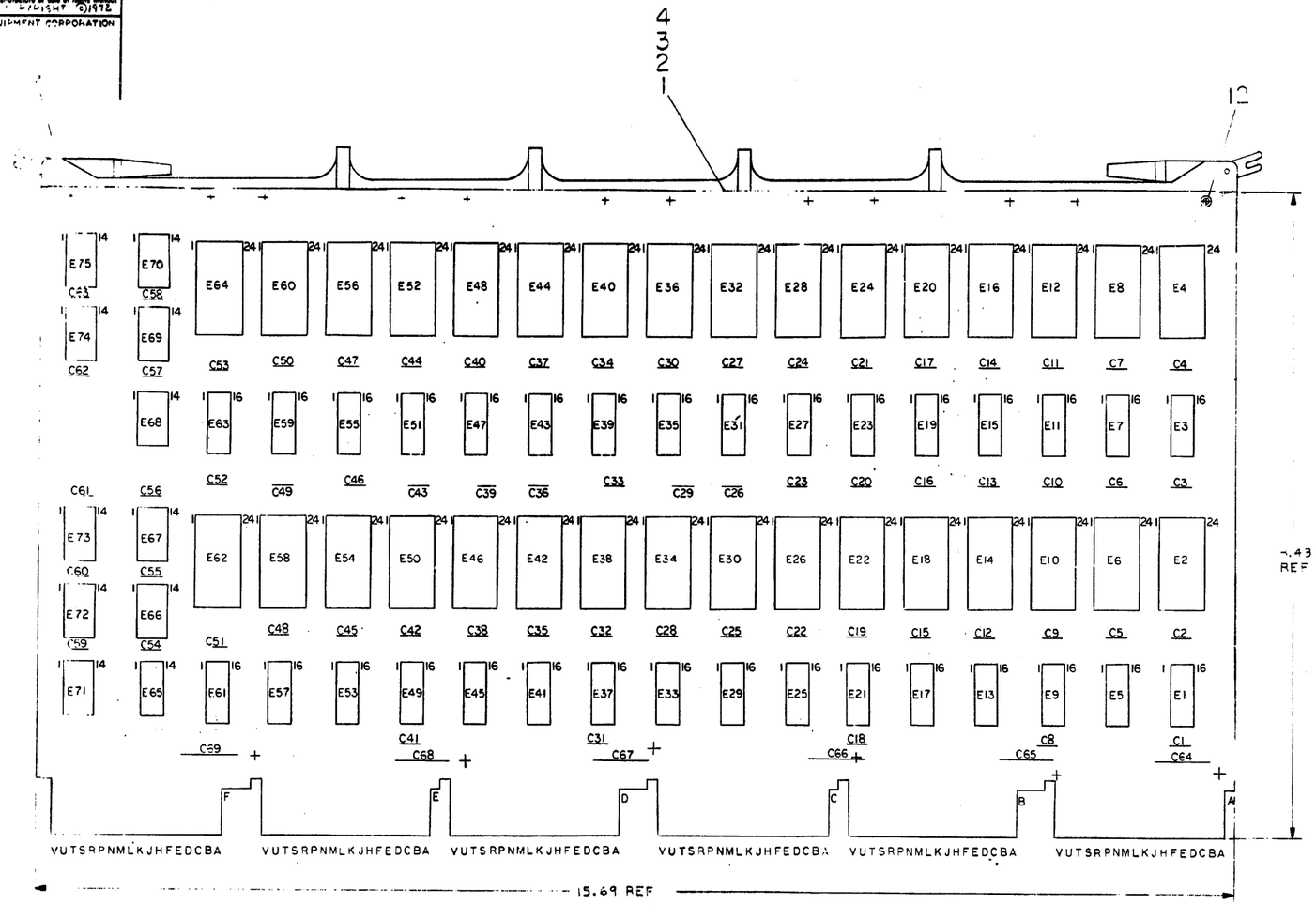

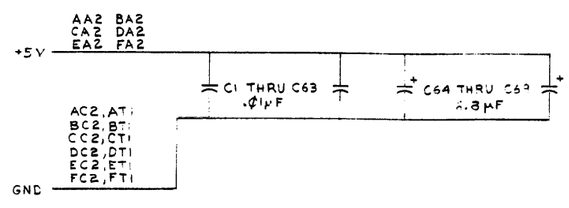

DEC 74175	8	16
DEC 74174	8	14
DEC 74150	12	24
IC TYPE	GND	+ 5V

GND AND 5V ARE USUALLY PIN 7 AND 14 RESPECTIVELY EXCEPTIONS ARE STATED ABOVE

IC PIN LOCATIONS

QTY	REF DESIGNATION	DESCRIPTION	PART NO.	ITEM NO.
REF		X-Y COORDINATE HOLE LOCATION	K-CO-M7288-0-4	1
REF		ASSY/DRILLING HOLE LAYOUT	D-AH-M7288-0-5	2
REF		MODULE ECO HISTORY	B-MH-M7288-0-6	3
1		ETCHED CIRCUIT BOARD	5010255	4
6	C64 THRU C69	CAP 6.8 MF 35V 20% TANT	1000067	5
63	C1 THRU C63	CAP .01 MF 100V 20% DISC	1001610	6
1		HANDLE MODULE	1210711-2	7
11	E65 THRU E75	I.C. DEC 7437	1910091	8
32	E2,E4,E6,E8,E10,E12,E14,E16,E18,E20,E22,E24,E26,E28,E30,E32,E34,E36,E38,E40,E42,E44,E46,E48,E50,E52,E54,E56,E58,E60,E62,E64	I.C. DEC 74150	1910153	9
16	E17,E19,E21,E23,E25,E27,E29,E31,E49,E51,E53,E55,E57,E59,E61,E63	I.C. DEC 74175	1910651	10
16	E1,E3,E5,E7,E9,E11,E13,E15,E33,E35,E37,E39,E41,E43,E45,E47	I.C. DEC 74174	1910652	11
12		EYELET	9006732	12

PARTS LIST

FIRST USED ON OPTION MODEL: PDP 11

ETCH BOARD REV A B

REV	CHANGE NO.	CHK	DEC NO.	EIA NO.	DEC NO.	EIA NO.

REVISIONS

SEMICONDUCTOR CONVERSION CHART

DRN. DATE 7-7-72
CHK'D. DATE
ENG. DATE
PROJ. ENG. DATE
PROD. DATE

NEXT HIGHER ASSY B-DD-DH11-0

SCALE NONE

SHEET 2 OF

digital EQUIPMENT CORPORATION MAYNARD MASSACHUSETTS

TITLE DH11 LINE PARAMETER CONTROL

SIZE D CODE CS NUMBER M7288-0-1 REV. B

DIST.

DEC FORM NO DRD-135A

BRUNING 40-522 16499

This drawing and specifications, herein, are the property of Digital Equipment Corporation and shall not be reproduced or copied or used in whole or in part as the basis for the manufacture or sale of items without written permission. COPYRIGHT © 1972
DIGITAL EQUIPMENT CORPORATION

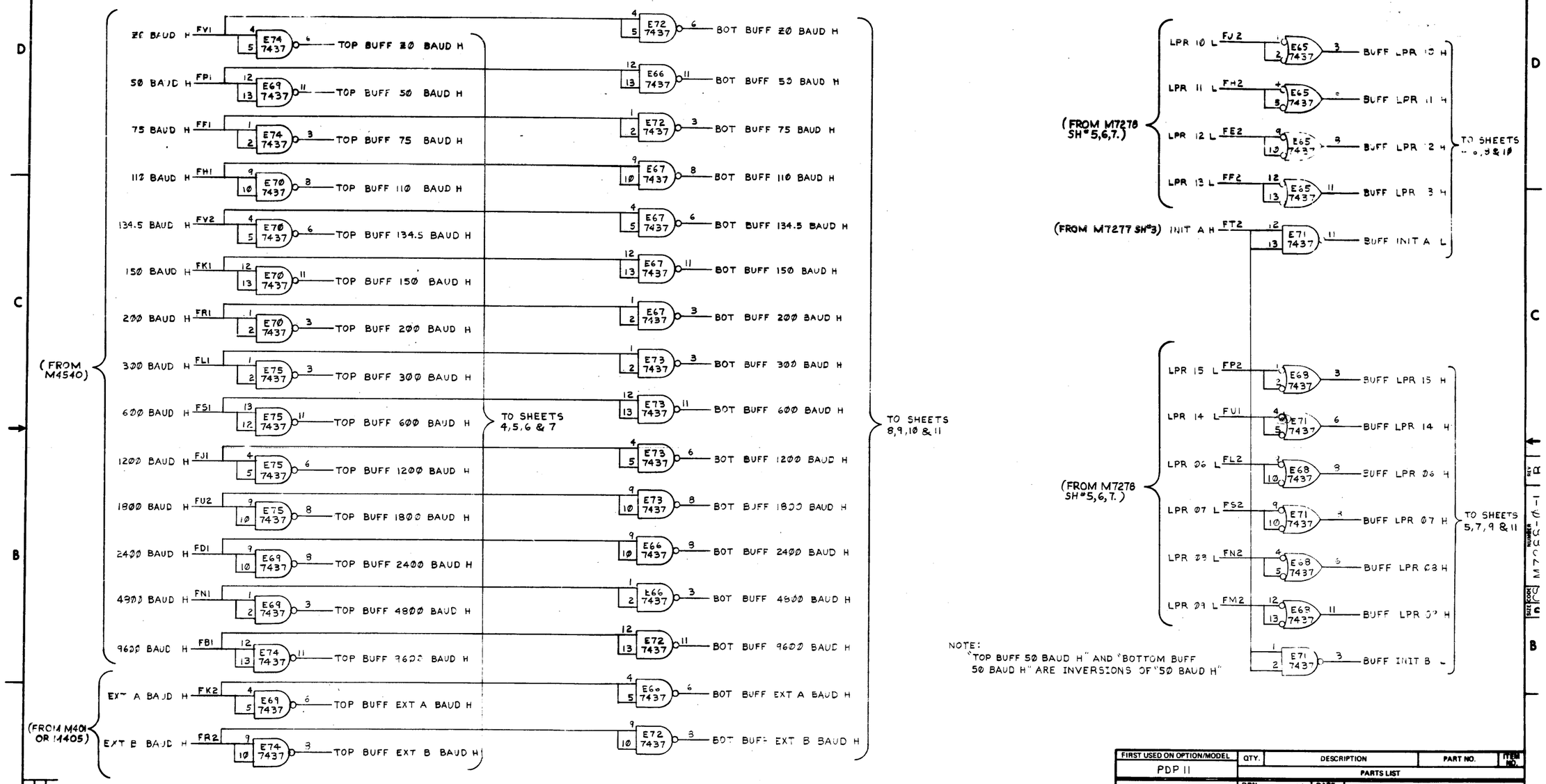

NOTE:
"TOP BUFF 50 BAUD H" AND "BOTTOM BUFF 50 BAUD H" ARE INVERSIONS OF "50 BAUD H"

FIRST USED ON OPTION/MODEL	QTY.	DESCRIPTION	PART NO.	ITEM NO.
PDP 11		PARTS LIST		

UNLESS OTHERWISE SPECIFIED DIMENSION IN INCHES. TOLERANCES

DECIMALS	ANGLES
.XXX = .005	±0° 30'
.XX = .02	
.X = .1	

REMOVE BURRS AND BREAK SHARP CORNERS SURFACE QUALITY

MATERIAL

FINISH

		DATE
DRN.	[redacted]	12-16-72
CHK'D.	[redacted]	12-16-72
ENG.	[redacted]	12-16-72
PROJ. ENG.	[redacted]	12-16-72
PROD.	[redacted]	12-16-72

NEXT HIGHER ASSY. B-DD-DH11-0

SCALE

SHEET 3 OF

[redacted] EQUIPMENT CORPORATION MAYNARD MASSACHUSETTS

TITLE DH11 LINE PARAMETER CONTROL

SIZE	CODE	NUMBER	REV.
D	CS	M7288-0-1	B

DIST.

REVISIONS: REV. / CHANGE NO. / CHK.

DEC FORM NO DRD 102-B

This drawing and specifications, herein, are the property of Digital Equipment Corporation and shall not be reproduced or copied or used in whole or in part as the basis for the manufacture or sale of items without written permission. COPYRIGHT © 1972
DIGITAL EQUIPMENT CORPORATION

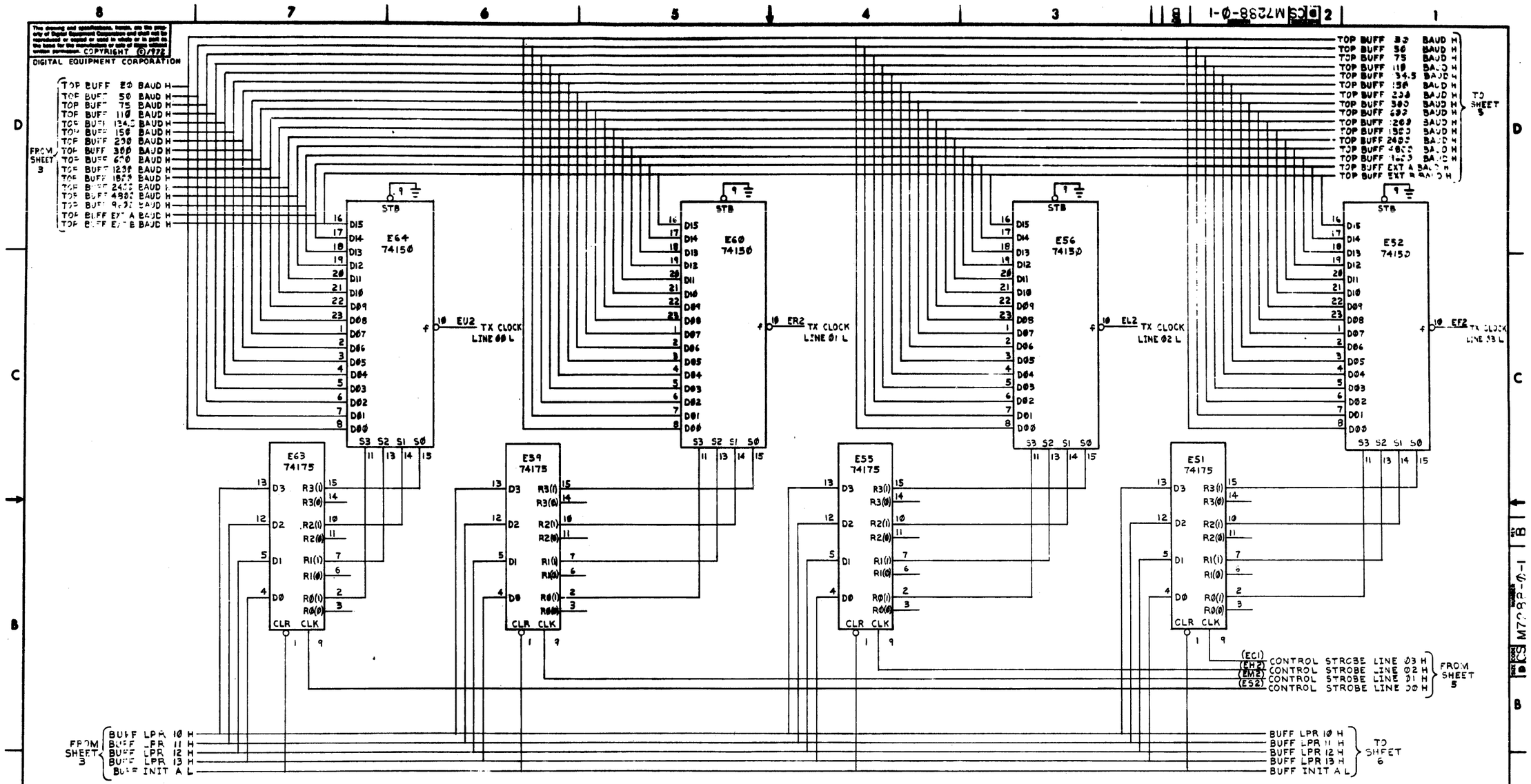

FIRST USED ON OPTION/MODEL	QTY.	DESCRIPTION	PART NO.	ITEM NO.
PDP 11		PARTS LIST		

UNLESS OTHERWISE SPECIFIED DIMENSION IN INCHES. TOLERANCES

DECIMALS	ANGLES
.XXX = .005 .XX = .02 .X = .1	±0° 30'

REMOVE BURRS AND BREAK SHARP CORNERS SURFACE QUALITY ✓

MATERIAL —/—

FINISH —/—

		DATE
DRN.	G. Smith	10-13-72
CHK'D.	[illegible]	12/12/72
ENG.	[illegible]	12/12/72
PROJ. ENG.	[illegible]	12/12/72
PROD.	Paul Tozier	12/12/72

NEXT HIGHER ASSY. B-DD-DH11-0

SCALE —/—

SHEET 4 OF

[redacted] EQUIPMENT CORPORATION MAYNARD, MASSACHUSETTS

TITLE DH11 LINE PARAMETER CONTROL

SIZE	CODE	NUMBER	REV.
D	CS	M7288-0-1	B

DIST.

REVISIONS: REV. / CHANGE NO. / CHK.

DEC FORM NO DRD 169-8

M7288-0-1 B

The drawing and specifications, herein, are the property of Digital Equipment Corporation and shall not be reproduced or copied or used in whole or in part as the basis for the manufacture or sale of items without written permission. COPYRIGHT © 1972
DIGITAL EQUIPMENT CORPORATION

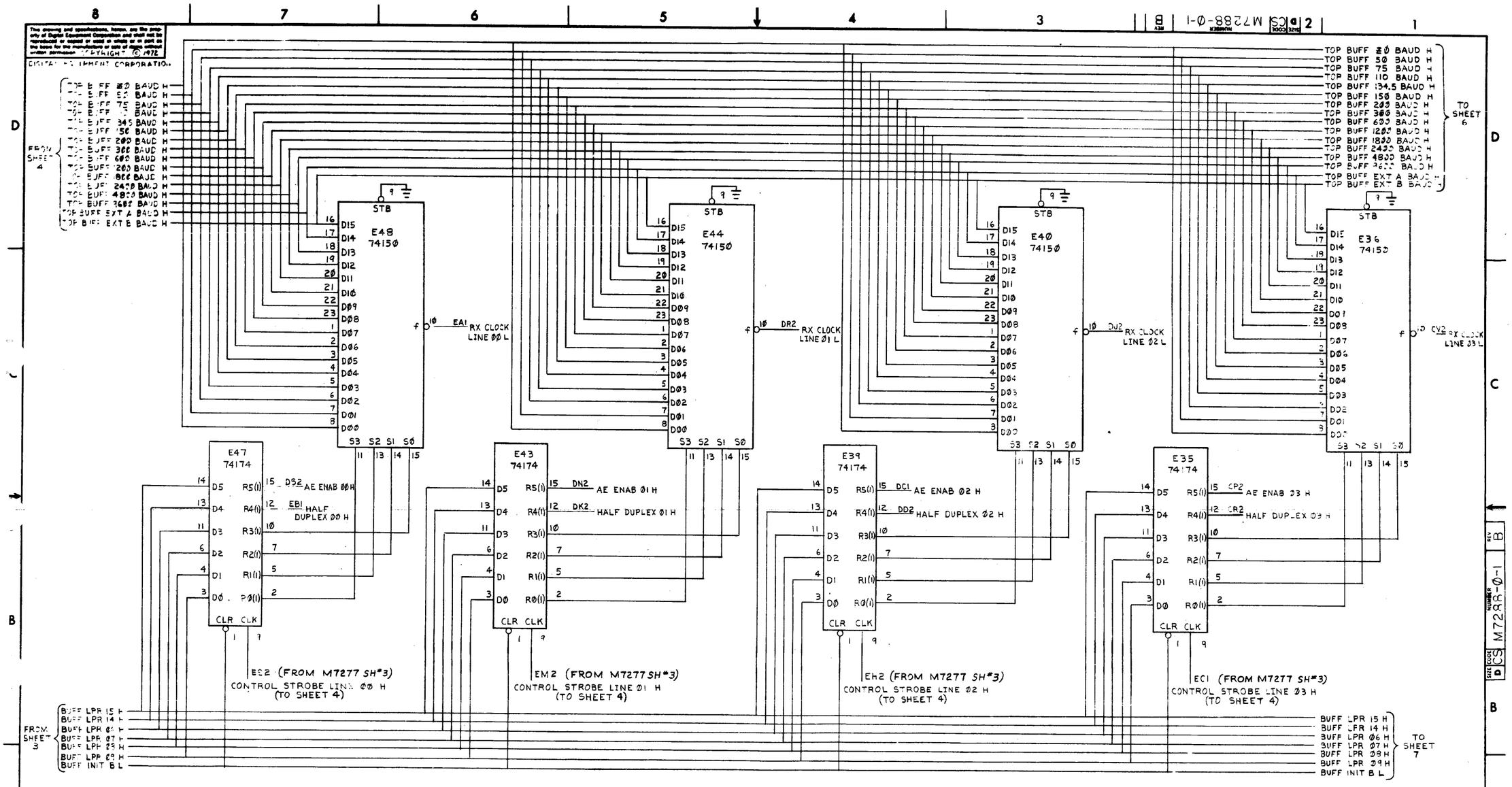

FIRST USED ON OPTION/MODEL	QTY.	DESCRIPTION	PART NO.	ITEM NO.
PDP 11		PARTS LIST		

UNLESS OTHERWISE SPECIFIED DIMENSION IN INCHES. TOLERANCES
DECIMALS: .XXX ± .005, .XX ± .02, .X ± .1
ANGLES: ±0° 30'
REMOVE BURRS AND BREAK SHARP CORNERS. SURFACE QUALITY ✓
MATERIAL: —/—
FINISH: —/—

DRN. B. Burkhart DATE 10-13-72
CHK'D. DATE
ENG. DATE
PROJ. ENG. DATE
PROD. DATE

[redacted] EQUIPMENT CORPORATION MAYNARD MASSACHUSETTS

TITLE: DH11 LINE PARAMETER CONTROL

NEXT HIGHER ASSY.: B-DD-DH11-0
SCALE: —/—
SHEET 5 OF

SIZE	CODE	NUMBER	REV.
D	CS	M7288-0-1	B

DIST.

REV	CHANGE NO.	CHK

REVISIONS

DEC FORM NO DRD 102-B

This drawing and specifications, herein, are the property of Digital Equipment Corporation and shall not be reproduced or copied or used in whole or in part as the basis for the manufacture or sale of items without written permission. COPYRIGHT © 1972
DIGITAL EQUIPMENT CORPORATION

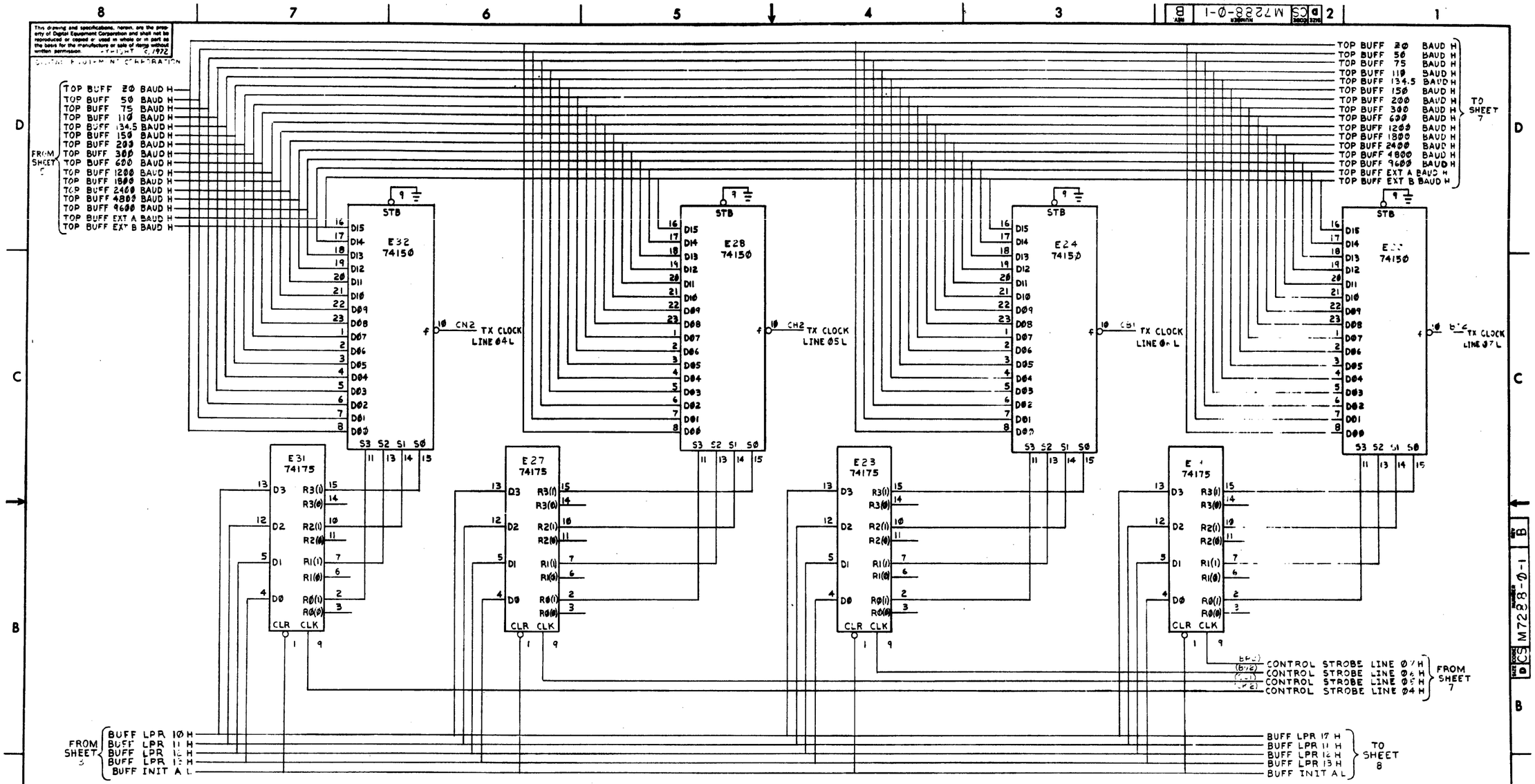

FIRST USED ON OPTION/MODEL	QTY.	DESCRIPTION	PART NO.	ITEM NO.
PDP 11		PARTS LIST		

UNLESS OTHERWISE SPECIFIED DIMENSION IN INCHES. TOLERANCES

DECIMALS	ANGLES
.XXX = .005	±0° 30'
.XX = .02	
.X = .1	

REMOVE BURRS AND BREAK SHARP CORNERS SURFACE QUALITY ✓

MATERIAL —/—/—

FINISH —/—/—

DRN. DATE 10-10-72
CHK'D. DATE 10-10-72
ENG. DATE 10/10/72
PROJ. ENG. DATE 10/10/72
PROD. DATE 10/10/72

digital EQUIPMENT CORPORATION MAYNARD MASSACHUSETTS

TITLE DH11 LINE PARAMETER CONTROL

NEXT HIGHER ASSY. B-CS-DH11-0

SCALE —/—/—

SHEET 0 OF

SIZE D CODE CS NUMBER M7288-0-1 REV. B

DIST.

REVISIONS: REV. | CHANGE NO. | CHK.

DEC FORM NO DRD 180-A

This drawing and specifications, herein, are the property of Digital Equipment Corporation and shall not be reproduced or copied or used in whole or in part as the basis for any reproduction or sale of items without written permission COPYRIGHT © 1972

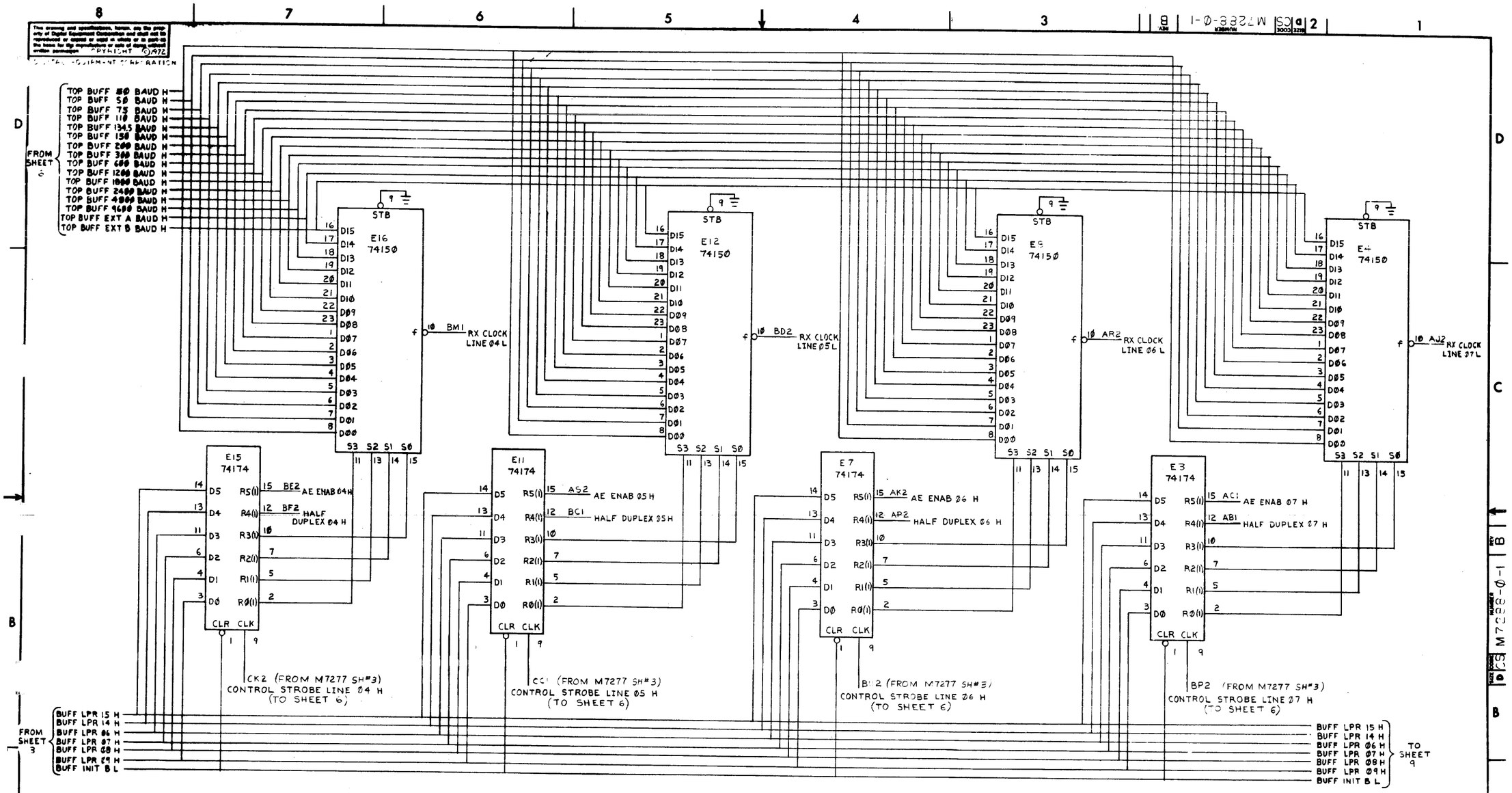

FIRST USED ON OPTION/MODEL	QTY.	DESCRIPTION	PART NO.	ITEM NO.
PDP 11		PARTS LIST		

UNLESS OTHERWISE SPECIFIED DIMENSION IN INCHES. TOLERANCES

DECIMALS	ANGLES
XXX ± .005	±0° 30'
XX ± .02	
X ± .1	

REMOVE BURRS AND BREAK SHARP CORNERS SURFACE QUALITY ✓

MATERIAL

FINISH

		DATE
DRN.		10-11-72
CHK'D.		
ENG.		
PROJ. ENG.		
PROD.		

NEXT HIGHER ASSY. S-CS-DH11-0

SCALE

SHEET 7 OF

digital EQUIPMENT CORPORATION MAYNARD MASSACHUSETTS

TITLE DH11 LINE PARAMETER CONTROL

SIZE	CODE	NUMBER	REV.
D	CS	M7288-0-1	B

DIST.

REVISIONS | REV | CHANGE NO

DEC FORM NO DRD 169-A

This drawing and specifications, herein, are the property of Digital Equipment Corporation and shall not be reproduced or copied or used in whole or in part as the basis for the manufacture or sale of items without written permission. © 1972

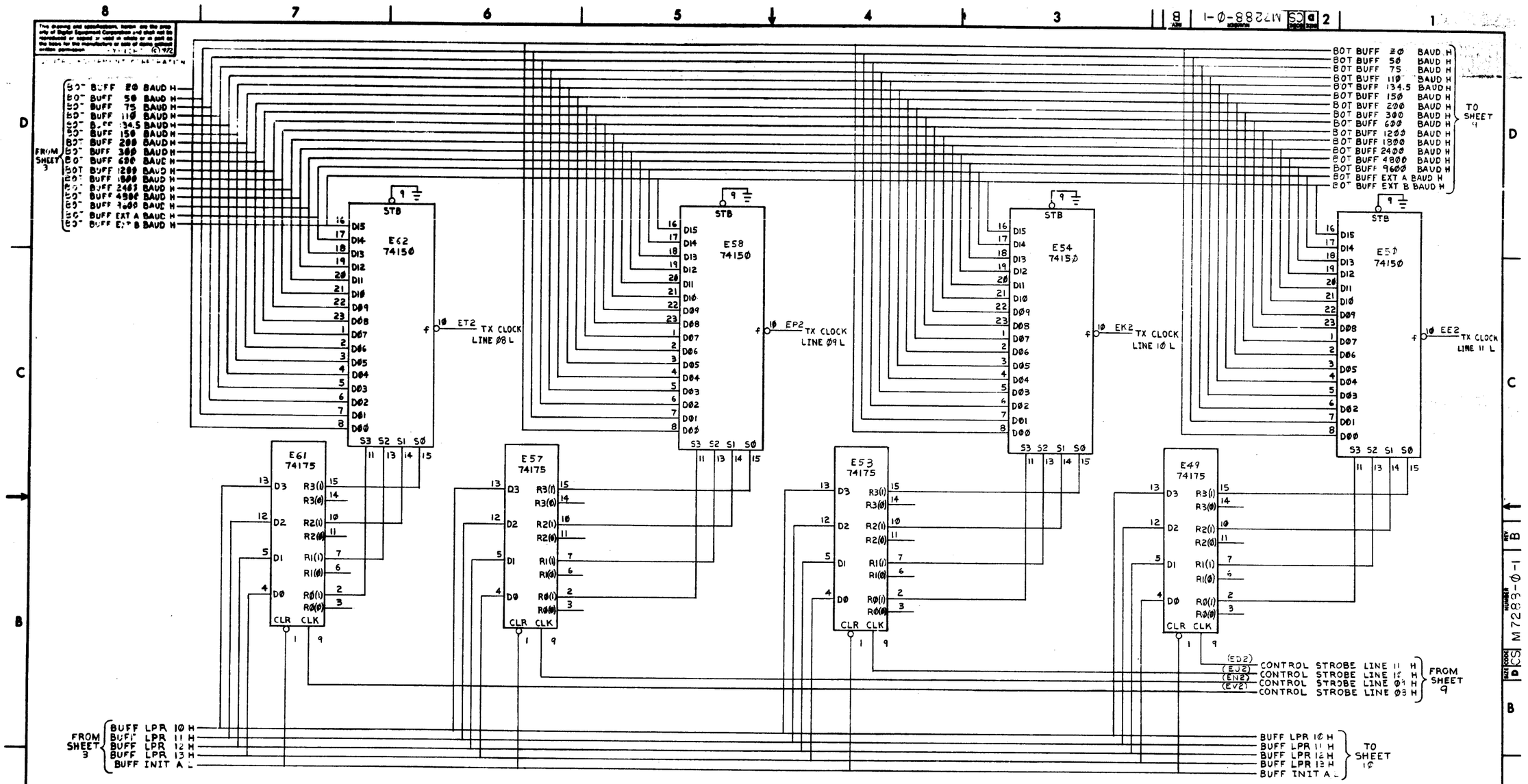

FIRST USED ON OPTION/MODEL	QTY.	DESCRIPTION	PART NO.	ITEM NO.
PDP 11		PARTS LIST		

UNLESS OTHERWISE SPECIFIED DIMENSION IN INCHES. TOLERANCES

DECIMALS	ANGLES
.XXX = .005 .XX = .02 .X = .1	±0° 30'

REMOVE BURRS AND BREAK SHARP CORNERS SURFACE QUALITY ✓

MATERIAL

FINISH

		DATE
DRN.		5-19-72
CHK'D.		DATE
ENG.		DATE
PROJ. ENG.		DATE
PROD.		DATE

digital EQUIPMENT CORPORATION MAYNARD MASSACHUSETTS

TITLE DHII LINE PARAMETER CONTROL

NEXT HIGHER ASSY. B-DD-DHII-Ø

SCALE

SHEET 8 OF

SIZE	CODE	NUMBER	REV.
D	CS	M7288-Ø-1	B

DIST.

REVISIONS: REV. | CHANGE NO. | CHK

DEC FORM NO DRD 189-A

This drawing and specifications, herein, are the property of Digital Equipment Corporation and shall not be reproduced or copied or used in whole or in part as the basis for the manufacture or sale of items without written permission. COPYRIGHT ©1972

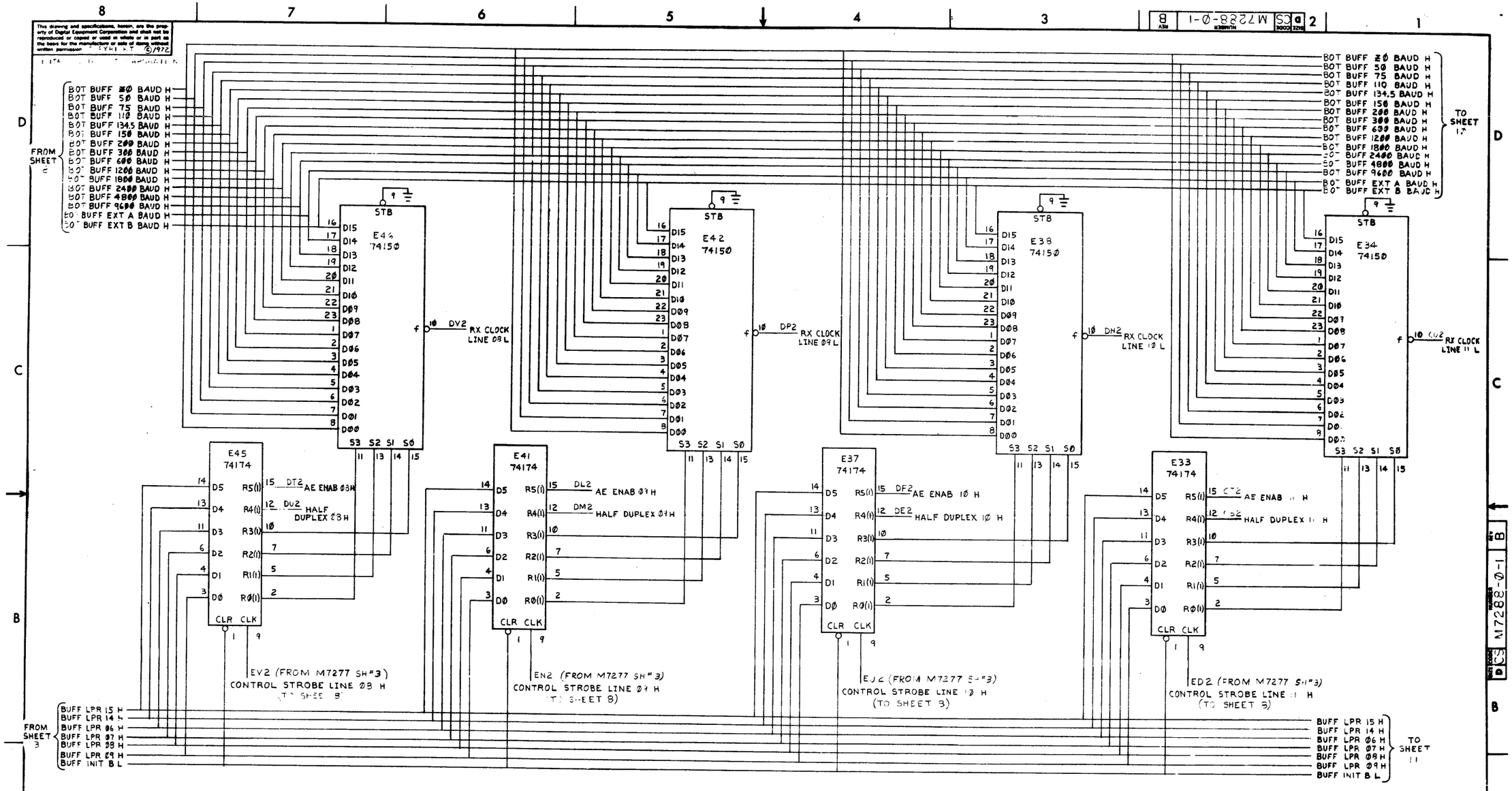

FIRST USED ON OPTION/MODEL	QTY.	DESCRIPTION	PART NO.	ITEM NO.
PDP 11		PARTS LIST		

UNLESS OTHERWISE SPECIFIED DIMENSION IN INCHES. TOLERANCES

DECIMALS	ANGLES
.XXX ± .005 .XX ± .02 .X ± .1	±0° 30'

REMOVE BURRS AND BREAK SHARP CORNERS SURFACE QUALITY ✓

MATERIAL

FINISH

		DATE
DRN.		10-19-72
CHK'D.		
ENG.		
PROJ. ENG.		
APPD.		

digital EQUIPMENT CORPORATION MAYNARD MASSACHUSETTS

TITLE DH11 LINE PARAMETER CONTROL

NEXT HIGHER ASSY. E-CS-DH11-0

SCALE

SHEET 9 OF

SIZE	CODE	NUMBER	REV.
D	CS	M7288-0-1	B

DIST.

REVISIONS	CHANGE NO.	REV.

CHK

DEC FORM NO DRD 100-A

M7288-0-1 REV B

This drawing and specifications, herein, are the property of Digital Equipment Corporation and shall not be reproduced or copied or used in whole or in part as the basis for the manufacture or sale of items without written permission. © 1972

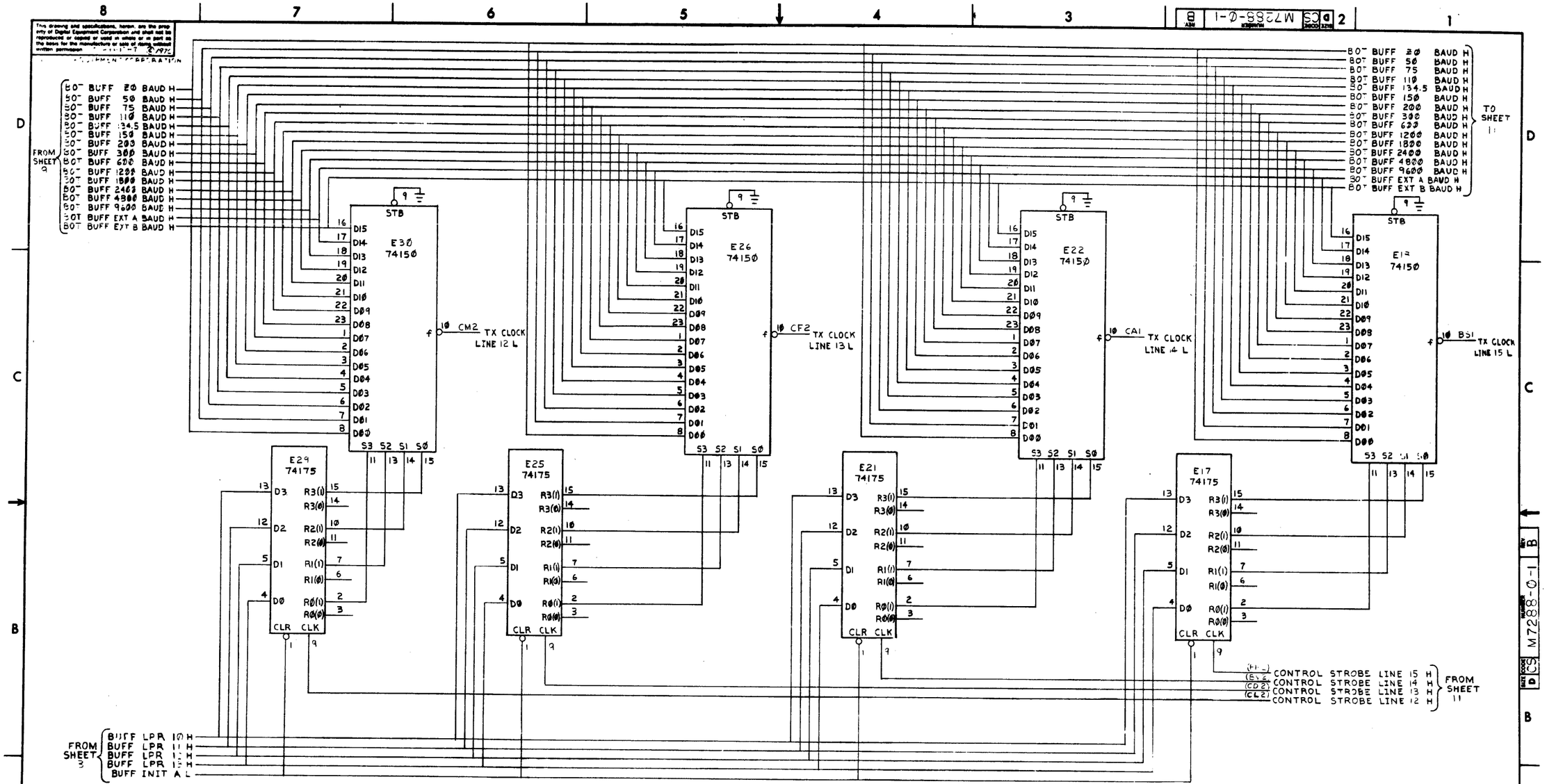

FIRST USED ON OPTION/MODEL	QTY.	DESCRIPTION	PART NO.	ITEM NO.
PDP 11		PARTS LIST		

UNLESS OTHERWISE SPECIFIED DIMENSION IN INCHES. TOLERANCES

DECIMALS	ANGLES
.XXX ± .005 .XX ± .02 .X ± .1	±0° 30'

REMOVE BURRS AND BREAK SHARP CORNERS SURFACE QUALITY ✓

MATERIAL —/—

FINISH —/—

		DATE
DRN.	L. Rudolph	10-19-72
CHK'D.	Robert Olsen	12/1/72
ENG.	[illegible]	[illegible]
PROJ. ENG.	[illegible]	12/1/72
PROD.	[illegible]	[illegible]

digital EQUIPMENT CORPORATION MAYNARD MASSACHUSETTS

TITLE DHII LINE PARAMETER CONTROL

NEXT HIGHER ASSY. B-DD-DHII-0

SCALE —/—

SHEET 10 OF

SIZE	CODE	NUMBER	REV.
D	CS	M7288-0-1	B

DIST.

REVISION'S: REV. / CHANGE NO. / CHK.

DEC FORM NO DRD 100-A

This drawing and specifications, herein, are the property of Digital Equipment Corporation and shall not be reproduced or copied or used in whole or in part as the basis for the manufacture or sale of items without written permission. COPYRIGHT (C) 1972
DIGITAL EQUIPMENT CORPORATION

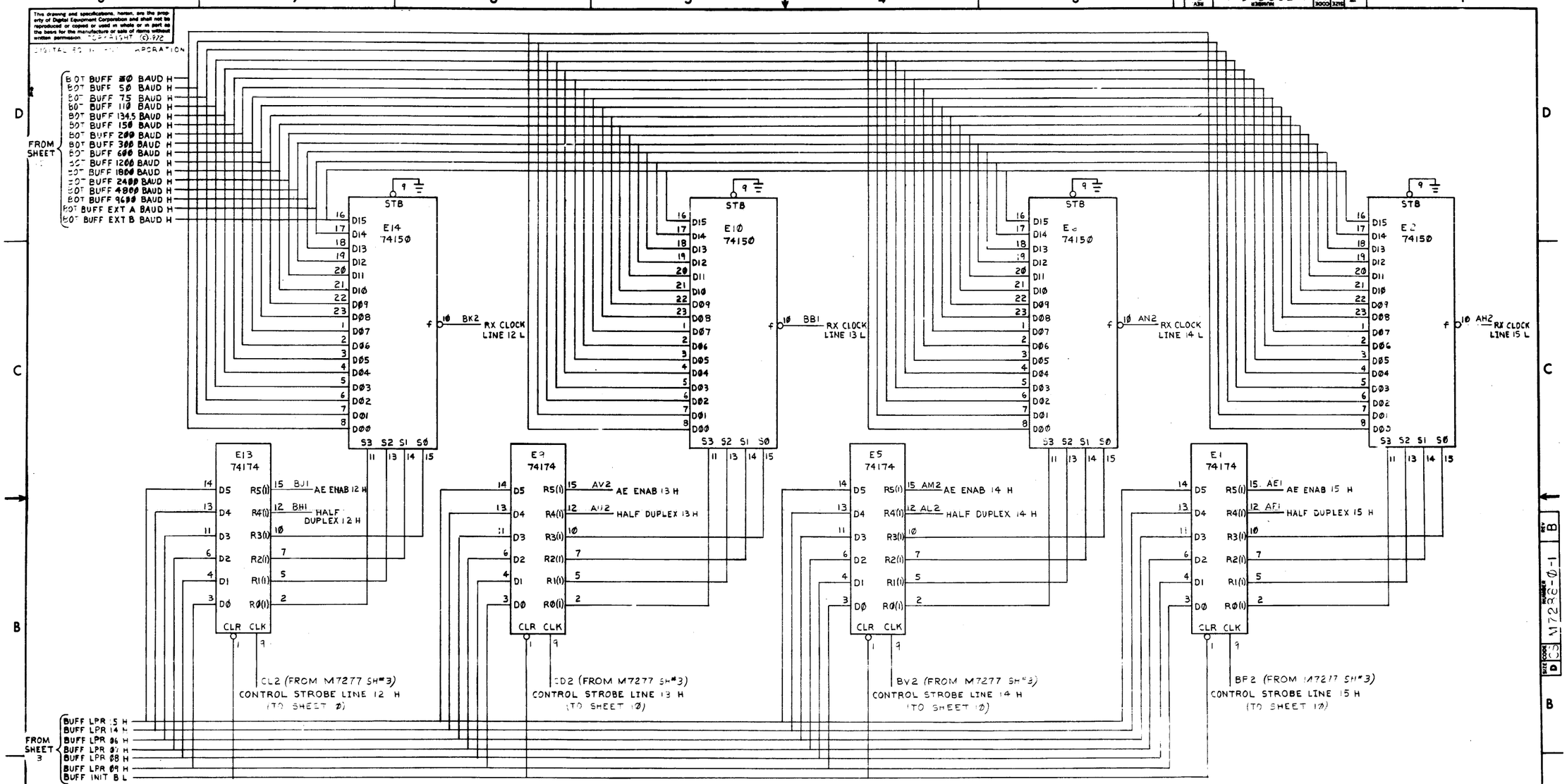

FIRST USED ON OPTION/MODEL	QTY.	DESCRIPTION	PART NO.	ITEM NO.
PDP 11		PARTS LIST		

UNLESS OTHERWISE SPECIFIED DIMENSION IN INCHES. TOLERANCES

DECIMALS	ANGLES
.XXX = .005	±0° 30'
.XX = .02	
.X = .1	

REMOVE BURRS AND BREAK SHARP CORNERS SURFACE QUALITY ✓

MATERIAL

FINISH

DRN. DATE 10-19-72
CHK'D DATE 12/18/72
ENG. DATE 12/18/72
PROJ. ENG. DATE 12/18/72
PROD. DATE 12/18/72

digital EQUIPMENT CORPORATION MAYNARD MASSACHUSETTS

TITLE DH11 LINE PARAMETER CONTROL

NEXT HIGHER ASSY. B-DC-DH11-0

SCALE

SHEET 11 OF

SIZE D CODE CS NUMBER M7288-0-1 REV B

DIST.

REVISIONS: REV | CHANGE NO. | CHK

DEC FORM NO DRD 189-A

PAGE REVISION CONTROL SHEET

SH NO.	PAGE REVISIONS					
1	*	A	B	C	D	E
2	*	*	B	C	D	E
3	*	*	B	C	D	E
4	*	A	B	C	D	E
5	*	*	B	C	D	E
6	*	*	B	C	D	E

ECO NO.	ETCH REV.	ENG.	DATE
	A		12/4/72
1	A		3/21/73
2	A		5/17/73
3	B		10/24/74
4	B		5/17/77
5	B		24 OCT 77

REMARKS

CHANGE REVISION OF ALL PAGES AT EACH ECO.

FIRST USED ON OPTION/MODEL

PDP11

DRN.		DATE 12-4-72
CHK'D.		DATE
ENG.		DATE 12/12/72
PROJ. ENG.		DATE 12/12/72
PROD.		DATE

digital EQUIPMENT CORPORATION
MAYNARD MASSACHUSETTS

TITLE
SYSTEM CONTROL & RECV SCAN

"THIS DRAWING AND SPECIFICATIONS, HEREIN, ARE THE PROPERTY OF DIGITAL EQUIPMENT CORPORATION AND SHALL NOT BE REPRODUCED OR COPIED OR USED IN WHOLE OR IN PART AS THE BASIS FOR THE MANUFACTURE OR SALE OF ITEMS WITHOUT WRITTEN PERMISSION.
COPYRIGHT © 1972 DIGITAL EQUIPMENT CORPORATION"

NEXT HIGHER ASSY. B-DD-DH11-Ø

SCALE —/—

SHEET 1 OF 6

SIZE	CODE	NUMBER	REV.
B	CS	M7289-Ø-1	E

DIST.

This drawing and specifications, herein, are the property of Digital Equipment Corporation and shall not be reproduced or copied or used in whole or in part as the basis for the manufacture or sale of things without written permission. COPYRIGHT © 1972
DIGITAL EQUIPMENT CORPORATION

NOTES:

1. UNLESS OTHERWISE NOTED RESISTANCE IS IN OHMS; CAPACITANCE IS IN PICOFARRADS.

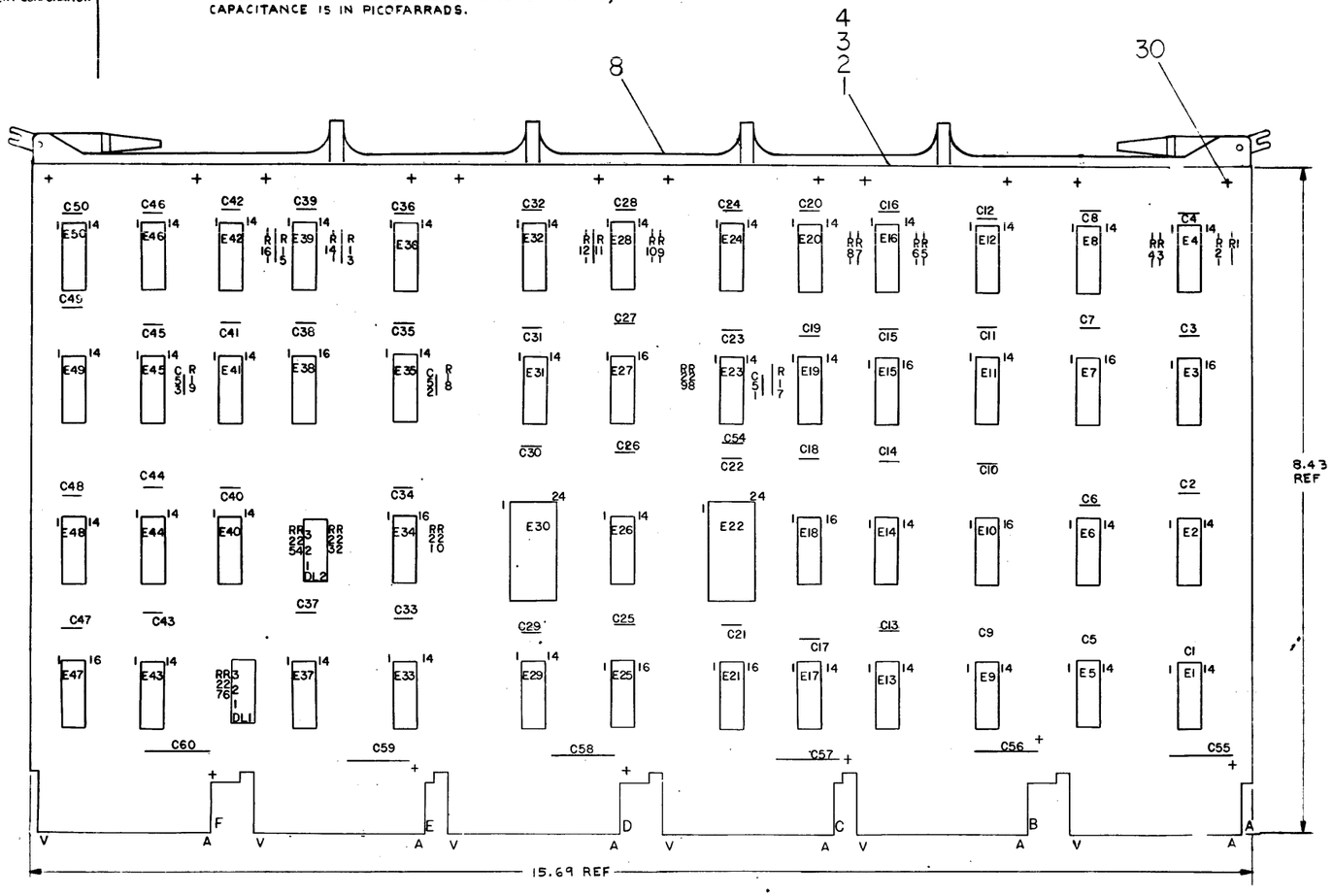

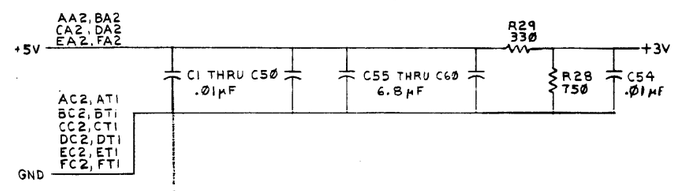

DEC 74193	8	16
DEC 74175	8	16
DEC 74174	8	16
DEC 74157	8	16
DEC 74150	2	24
IC TYPE	GND	+ 5V

GND AND 5V ARE USUALLY PIN 7 AND 14 RESPECTIVELY EXCEPTIONS ARE STATED ABOVE

IC PIN LOCATIONS

QTY	REF DESIGNATION	DESCRIPTION	PART NO.	ITEM NO.
REF		X-Y COORDINATE HOLE LOCATION	K-CO-M7289-0-4	1
REF		ASSY/DRILLING HOLE LAYOUT	D-AH-M7289-0-5	2
REF		MODULE ECO HISTORY	B-HH-M7289-0-6	3
1		ETCHED CIRCUIT BOARD	5010266	4
6	C55 THRU C60	CAP 6.8 MFD 35V ± 20% STANT	1000057	5
51	C1 THRU C50,C54	CAP .01 MFD 100V ± 10% DISC	1001610	6
3	C51,C52,C53	CAP 27 PF 100V ± 5% D.M.	1001739	7
1		HANDLE MODULE	1210711-2	8
1	R29.	RES 330 1/4W ± 5%	1300296	9
2	R25,R26	RES 390 1/4W ± 5%	1300390	10
2	R24,R27	RES 470 1/4W ± 5%	1300316	11
20	R1 THRU R16,R20 THRU R23	RES 1K 1/4W ± 5%	1300365	12
3	R17,R18,R19	RES 2.2K 1/4W ± 5%	1300417	13
1	R28	RES 750 1/4W ± 5%	1301401	14
2	DL1,DL2	DELAY LINE	1805528-01	15
6	E11,E19,E29,E37,E41,E50,	DEC I.C. 7474	1905547	16
12	E2,E4,E9,E14,E16,E20,E26, E31,E32,E38,E42,E48	DEC I.C. 7400	1905575	17
2	E6,E43	DEC I.C. 7410	1905576	18
3	E1,E8,E49	DEC I.C. 7402	1909004	19
1	E44	DEC I.C. 74H74	1909667	20
6	E5,E12,E24,E33,E36,E46	DEC I.C. 7404	1909686	21
1	E26	DEC I.C. 7417	1909929	22
1	E25	DEC I.C. 74193	1910018	23
2	E22,E30	DEC I.C. 74150	1910153	24
3	E13,E17,E40	DEC I.C. 7408	1910155	25
3	E23,E35,E45	DEC I.C. 74121	1910230	26
4	E7,E10,E18,E47	DEC I.C. 74175	1910651	27
1	E21	DEC I.C. 74174	1910652	28
5	E3,E15,E27,E34,E38	DEC I.C. 74157	1910655	29
12		EYELET (GS-4-7)	9006732	30

PARTS LIST

ETCH BOARD REV B

FIRST USED ON OPTION MODEL: PDP 11

REV	CHANGE NO.	CHK
D	M7289-00004	J MCNAMARA 11 May 77

REVISIONS

DEC NO.	EIA NO.	DEC NO.	EIA NO.

SEMICONDUCTOR CONVERSION CHART

DRN. DATE 11-7-72
DSGN. DATE 12/6/72
ENG. DATE 12/11/72
PROJ. ENG. DATE
PROD. DATE

NEXT HIGHER ASSY: B-DD-D711-0

SCALE NONE

SHEET 2 OF

digital EQUIPMENT CORPORATION MAYNARD, MASSACHUSETTS

TITLE: SYSTEM CONTROL & RECV SCAN

SIZE D CODE CS NUMBER M7289-0-1 REV. E

DIST.

BRUNING 40-522 4693

DEC FORM NO DRD-135A

This drawing and specifications, herein, are the property of Digital Equipment Corporation and shall not be reproduced or copied or used in whole or in part as the basis for the manufacture or sale of items without written permission. COPYRIGHT © 1972
DIGITAL EQUIPMENT CORPORATION

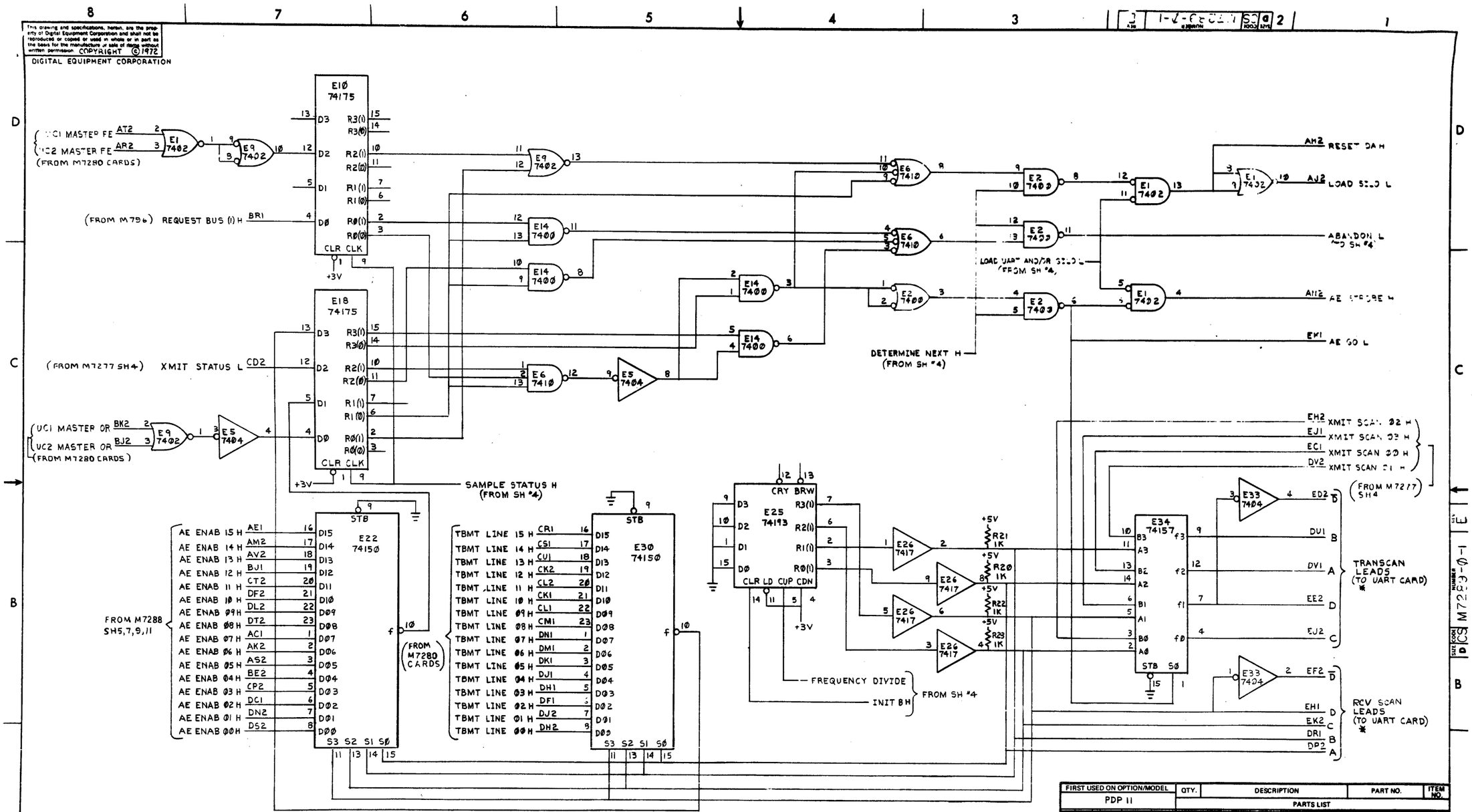

FIRST USED ON OPTION/MODEL	QTY.	DESCRIPTION	PART NO.	ITEM NO.
PDP 11		PARTS LIST		

UNLESS OTHERWISE SPECIFIED DIMENSION IN INCHES. TOLERANCES

DECIMALS	ANGLES
.XXX = .005 .XX = .02 .X = .1	±0° 30'

REMOVE BURRS AND BREAK SHARP CORNERS SURFACE QUALITY ✓

MATERIAL —/—/—

FINISH —/—/—

		DATE
DRN.		11-2-72
CHK'D		12/12/72
ENG.		12/12/72
PROJ. ENG.		12/12/72
PROD.		12/21/72

digital EQUIPMENT CORPORATION MAYNARD MASSACHUSETTS

TITLE SYSTEM CONTROL & RECV SCAN

NEXT HIGHER ASSY. B-DD-DH11-0

SCALE —/—/—

SHEET 3 OF

SIZE	CODE	NUMBER	REV.
D	CS	M7289-0-1	E

DIST.

REVISIONS | REV | CHANGE NO | CHK

BRUNING 40 522-15840

DEC FORM NO DRD 102-B

This drawing and specifications, herein, are the property of Digital Equipment Corporation and shall not be reproduced or copied or used in whole or in part as the basis for the manufacture or sale of items without written permission. COPYRIGHT ©1972

DIGITAL EQUIPMENT CORPORATION

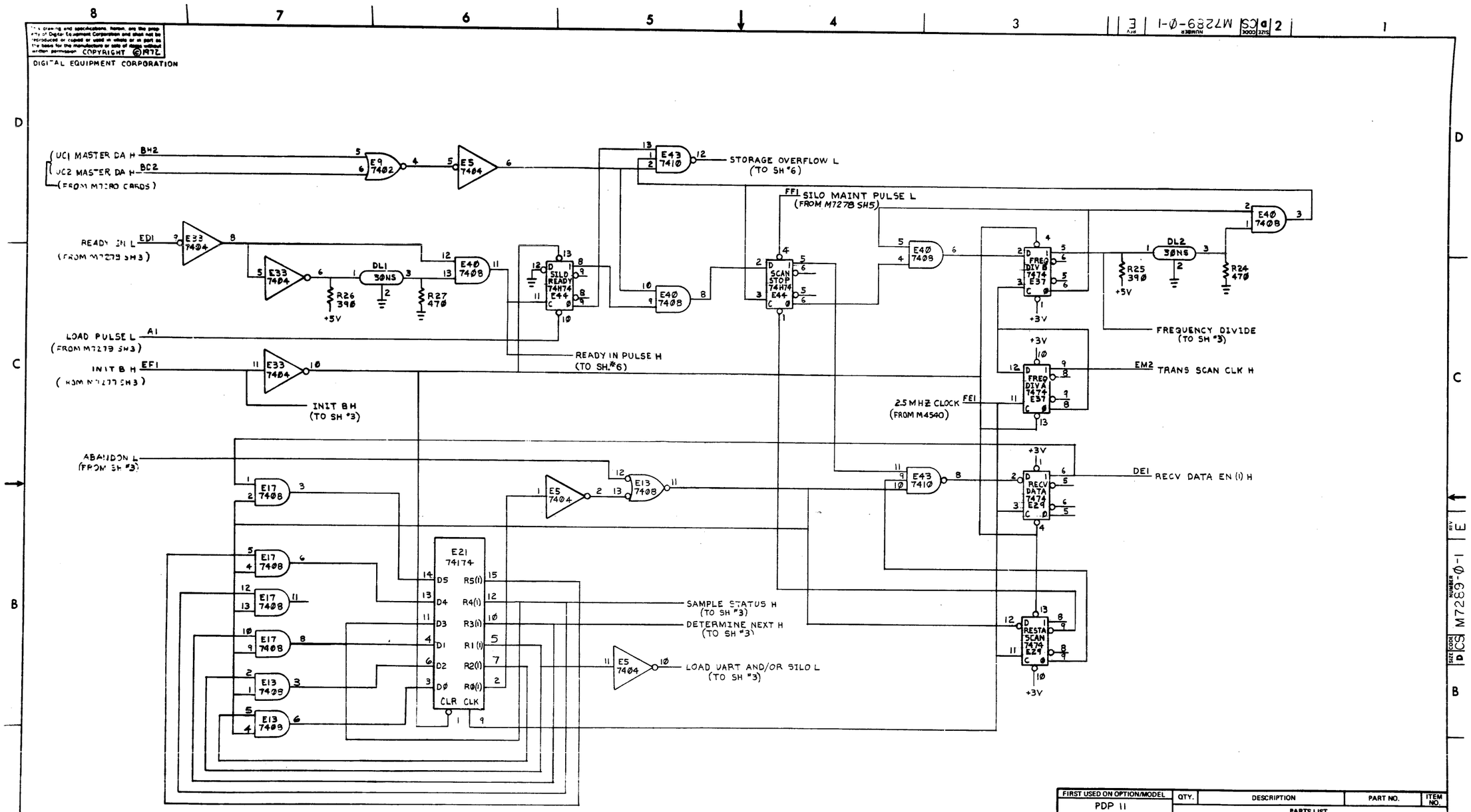

FIRST USED ON OPTION/MODEL	QTY.	DESCRIPTION	PART NO.	ITEM NO.
PDP 11		PARTS LIST		

UNLESS OTHERWISE SPECIFIED DIMENSION IN INCHES. TOLERANCES

DECIMALS	ANGLES
.XXX = .005 .XX = .02 .X = .1	±0° 30'

REMOVE BURRS AND BREAK SHARP CORNERS SURFACE QUALITY

MATERIAL

FINISH

DRN.		DATE 11-3-72
CHK'D		DATE
ENG.		DATE
PROJ. ENG.		DATE
PROD.		DATE

digital EQUIPMENT CORPORATION MAYNARD MASSACHUSETTS

TITLE SYSTEM CONTROL & RECV SCAN

NEXT HIGHER ASSY. B-DD-DH11-Ø

SCALE

SHEET 4 OF

SIZE	CODE	NUMBER	REV.
D	CS	M7289-Ø-1	E

DIST.

REV.	REVISIONS	CHK'D	DATE

BRUNING 40"×22" (560×...)
FORM NO (10) 102-P

This drawing and specifications, herein, are the property of Digital Equipment Corporation and shall not be reproduced or copied or used in whole or in part as the basis for the manufacture or sale of items without written permission. COPYRIGHT © 1972

DIGITAL EQUIPMENT CORPORATION

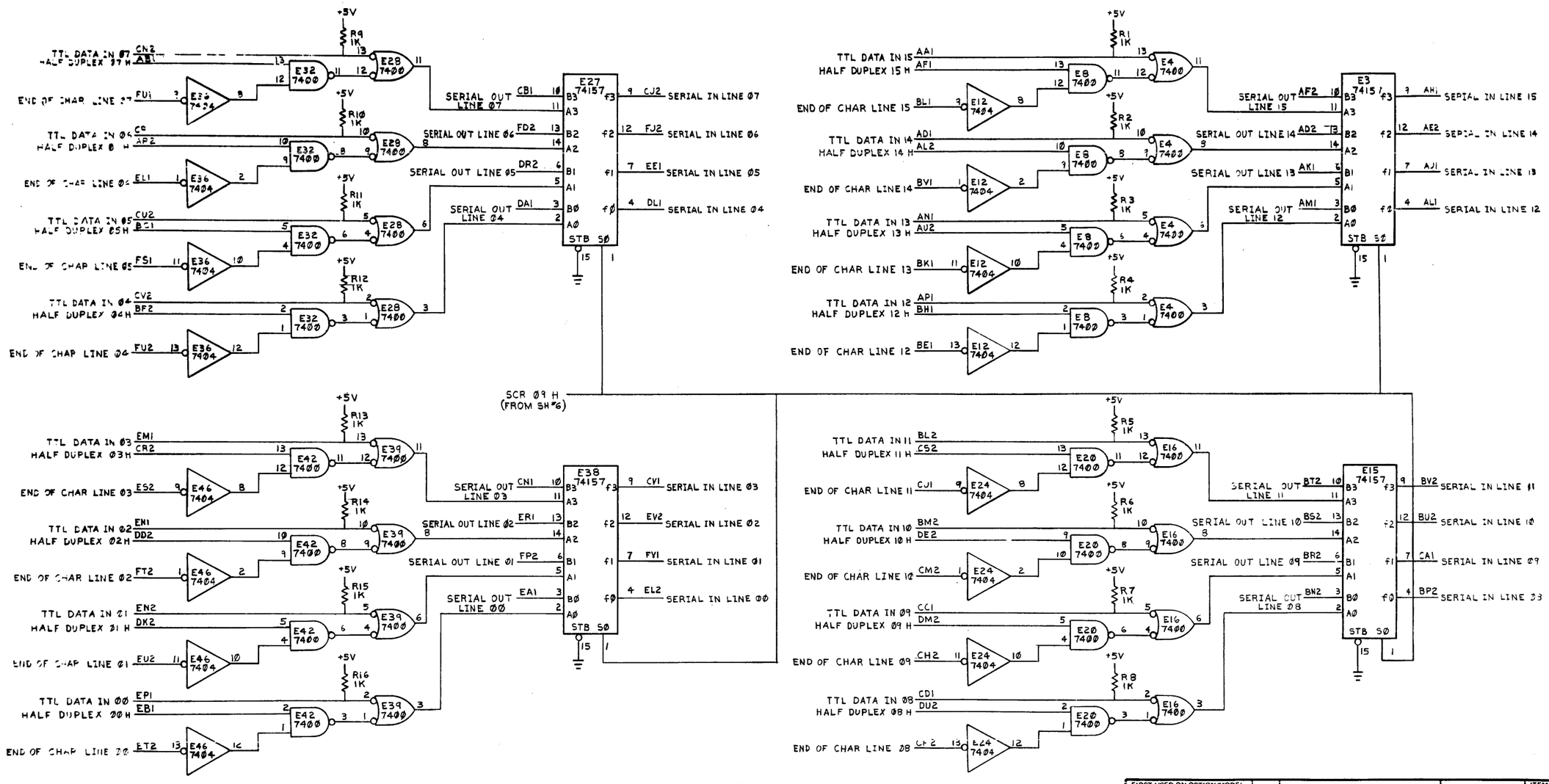

NOTE:
ALL "TTL DATA IN" SIGNALS FROM M971.
ALL "HALF DUPLEX" SIGNALS FROM M7288 SHS,7,9,11.
ALL "END OF CHAR" SIGNALS FROM M7280's.
ALL "SERIAL OUT" SIGNALS FROM M7280's.

FIRST USED ON OPTION/MODEL	QTY.	DESCRIPTION	PART NO.	ITEM NO.
PDP 11		PARTS LIST		

UNLESS OTHERWISE SPECIFIED DIMENSION IN INCHES. TOLERANCES

DECIMALS	ANGLES
.XXX = .005	±0° 30'
.XX = .02	
.X = .1	

REMOVE BURRS AND BREAK SHARP CORNERS SURFACE QUALITY ✓

MATERIAL

FINISH

		DATE
DRN.		11-7-72
CHK'D.		12/8/72
ENG.		12/7/72
PROJ. ENG.		12/8/72
PROD.		12/12/72

NEXT HIGHER ASSY. B-DD-DH11-0

SCALE

SHEET 5 OF

digital EQUIPMENT CORPORATION MAYNARD MASSACHUSETTS

TITLE SYSTEM CONTROL & RECV SCAN

SIZE	CODE	NUMBER	REV.
D	CS	M7289-0-1	E

DIST.

REVISIONS		
	CHANGE NO.	CHK

DRAWING 40-322 (5840)

CAT FORM NO. (IRD) 102-R

This drawing and specifications herein, are the property of Digital Equipment Corporation and shall not be reproduced or copied or used in whole or in part as the basis for the manufacture or sale of items without written permission. COPYRIGHT © 1972
DIGITAL EQUIPMENT CORPORATION

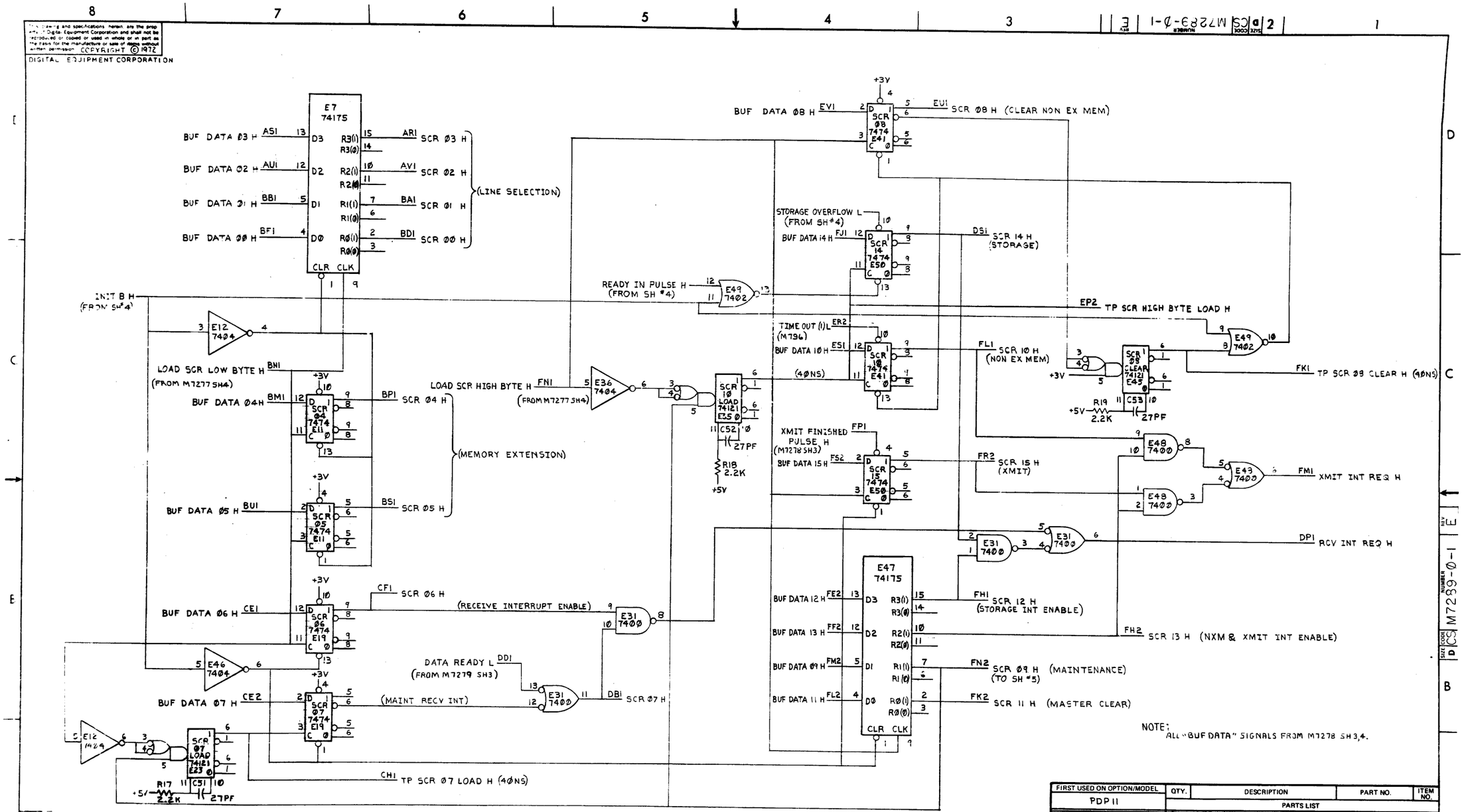

FIRST USED ON OPTION/MODEL	QTY.	DESCRIPTION	PART NO.	ITEM NO.
PDP 11		PARTS LIST		

UNLESS OTHERWISE SPECIFIED DIMENSION IN INCHES. TOLERANCES
DECIMALS: .XXX = .005, .XX = .02, .X = .1 — ANGLES: ±0° 30'
REMOVE BURRS AND BREAK SHARP CORNERS SURFACE QUALITY ✓
MATERIAL
FINISH

DRN. DATE 11-2-72
CHKD. DATE 11/4/72
ENG. DATE
PROJ. ENG. DATE
PROD. DATE

digital EQUIPMENT CORPORATION MAYNARD MASSACHUSETTS

TITLE SYSTEM CONTROL & RECV SCAN

NEXT HIGHER ASSY. B-DD-DH11-Ø
SCALE
SHEET 6 OF

SIZE	CODE	NUMBER	REV.
D	CS	M7289-Ø-1	E

DIST.

SIZE D CODE CS NUMBER M7289-Ø-1 REV E

This drawing and specifications, herein, are the property of Digital Equipment Corporation and shall not be reproduced or copied or used in whole or in part as the basis for the manufacture or sale of items without written permission. COPYRIGHT ©
DIGITAL EQUIPMENT CORPORATION

NOTES:

REF				
REF		X-Y COORDINATE HOLE LOCATION	K-CO-G7360-0-4	1
REF		ASSY/DRILLING HOLE LAYOUT	D-AH-G7360-0-5	2
REF		MODULE ECO HISTORY	B-MH-G7360-0-6	3
1		ETCHED CKT. BD	5010293	4
2	J1,J2	SOCKET IC TYPE 16 PIN	1209836	5
1		HANDLE FLIP CHIP GREEN	908337-1	6
2		EYELET GS4-7 E.B. STIMPSON	9006732	7

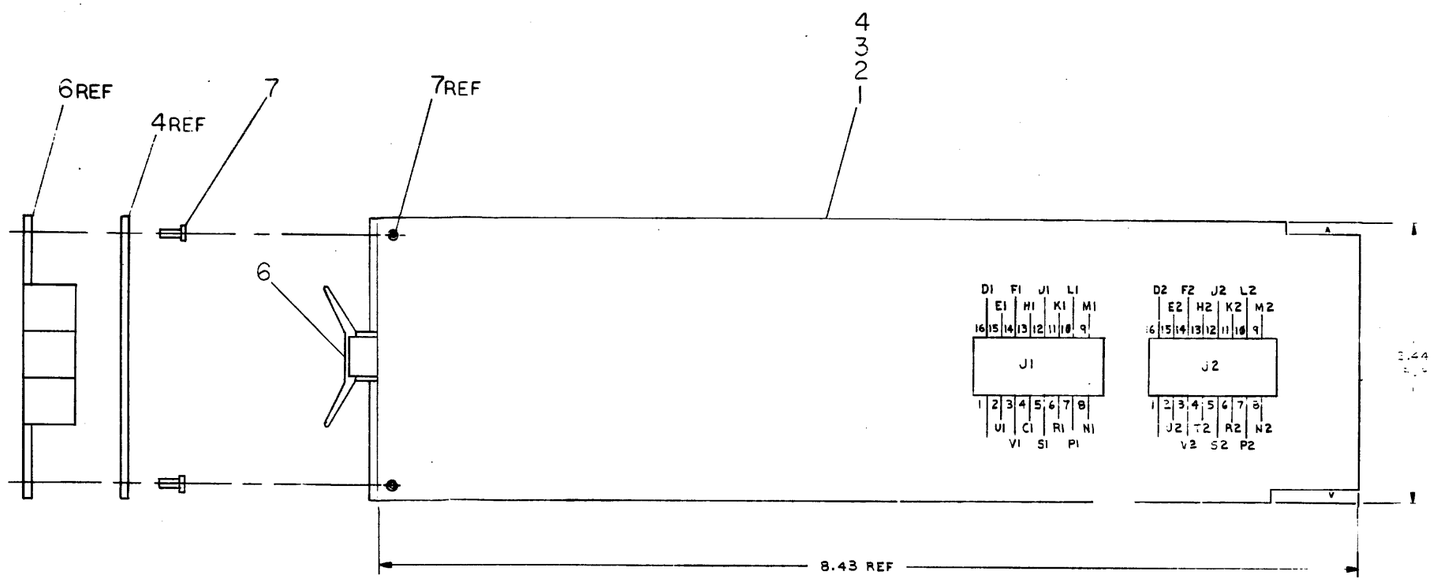

IC TYPE	GND	+ 5V
GND AND 5V ARE USUALLY PIN 7 AND 14 RESPECTIVELY EXCEPTIONS ARE STATED ABOVE		

IC PIN LOCATIONS

FIRST USED ON OPTION MODEL
PDP 11

DEC NO.	EIA NO.	DEC NO.	EIA NO.

SEMICONDUCTOR CONVERSION CHART

ORIGINATED A
CHANGE NO.
REV
REVISIONS
CHK.

QTY	REF DESIGNATION	DESCRIPTION	PART NO.	ITEM NO.

PARTS LIST

ETCH BOARD REV B

DRN. DATE 12-27-72
CHK'D. DATE
ENG. DATE
PROJ. ENG. DATE
PROD. DATE

NEXT HIGHER ASSY
B-DD-D1411-D

SCALE NONE
SHEET 1 OF 1

digital EQUIPMENT CORPORATION
MAYNARD MASSACHUSETTS

TITLE
PRIORITY SELECTOR

SIZE	CODE	NUMBER	REV.
D	CS	G7360-0-1	A

DIST.

DEC FORM NO. DRD-135A

This drawing and specifications, herein, are the property of Digital Equipment Corporation and shall not be reproduced or copied or used in whole or in part as the basis for the manufacture or sale of items without written permission. COPYRIGHT © 1972 DIGITAL EQUIPMENT CORPORATION

NOTES:

1. UNLESS OTHERWISE NOTED: RESISTANCE IS IN OHMS; CAPACITANCE IS IN PICOFARADS

BAUD RATE	FREQUENCY (IN HERTZ)	TIME FOR ONE CYCLE (IN MICROSECONDS)
9600	153,600	6.5
7200	115,200	8.8
4800	76,800	13.0
3600	57,600	17.4
2400	38,400	26.0
1800	28,800	34.7
1200	19,200	52.1
600	9600	104
300	4800	208
200	3200	313
150	2400	417
134.5	2152	465
110	1760	568
75	1200	833
50	800	1250

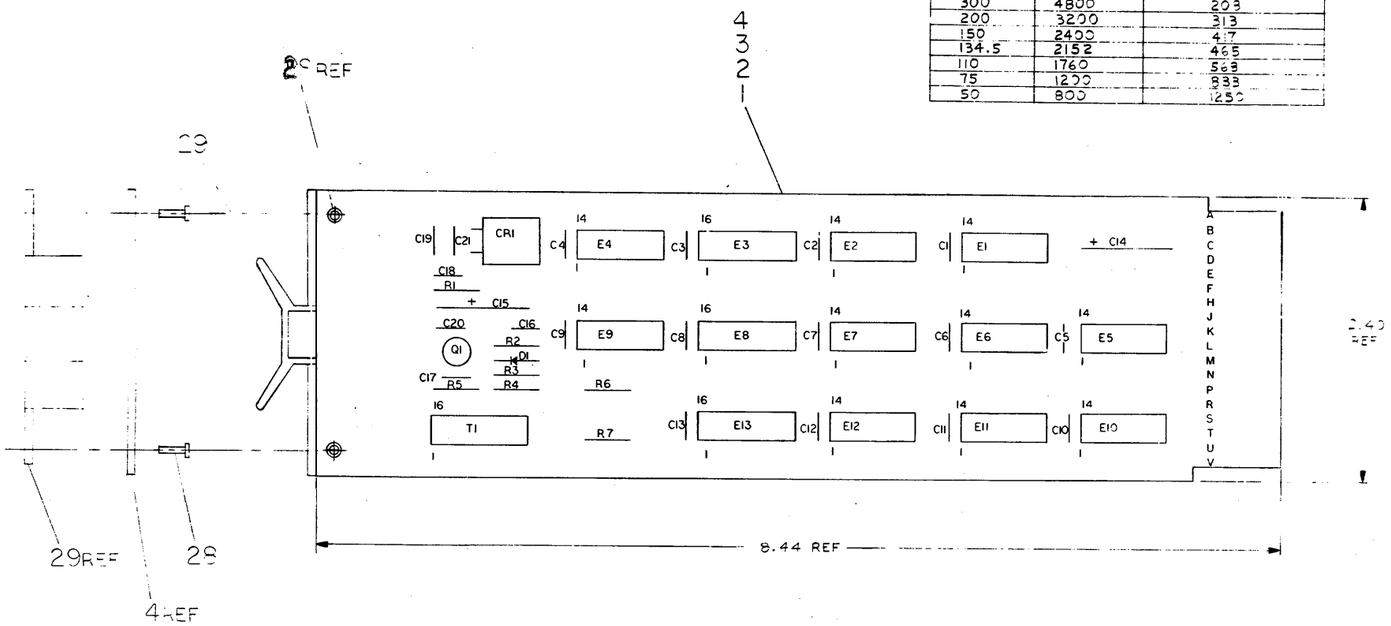

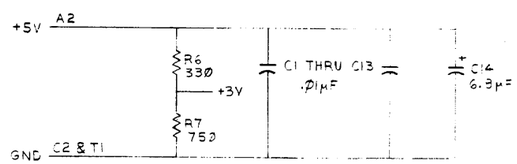

DEC 7490	10	5
DEC 7492	10	5
DEC 7493	10	5
DEC 74161	8	16
IC TYPE	GND	+ 5V

GND AND 5V ARE USUALLY PIN 7 AND 14 RESPECTIVELY EXCEPTIONS ARE STATED ABOVE

IC PIN LOCATIONS

DRAWING 40-522 16699

DEC FORM NO. DRD-135A

QTY	REF DESIGNATION	DESCRIPTION	PART NO.	ITEM NO.
REF		X-Y COORDINATE HOLE LOCATION	K-CO-M4540-0-4	1
REF		ASSY DRILLING HOLE LAYOUT	D-AH-M4540-0-5	2
REF		MODULE ECO HISTORY	B-MH-M4540-0-6	3
1		ETCHED CIRCUIT BOARD	5010233	4
1	C21	CAP 10PF 100V 5% DM	1000006	5
1	C19	CAP 33PF 100V 5 DM	1000009	6
1	C20	CAP 68PF 100V 5 DM	1000014	7
1	C18	CAP 100PF 100V 5 DM	1000016	8
2	C14, C15	CAP 6 8MF 35V 20 TANT	1000067	9
13	C1 THRU C13	CAP .01MF 100V 20 DISC	1001610	10
2	C16, C17	CAP .047MF 16V DISC	1009678	11
1	D1	DIODE D662	1100113	12
1	R5	RES 220 ¼W 5	1300271	13
1	R6	RES 330 ¼W 5	1300295	14
2	R2, R3	RES 470 ¼W 5	1300316	15
1	R4	RES 3 3K ¼W 5	1300439	16
1	R1	RES 10K ¼W 5	1300479	17
1	R7	RES 750 ¼W 5	1301401	18
1	Q1	TSTR 3009B	503100	19
1	T1	TRANSFORMER	1609651	20
1	CR1	CRYSTAL 20 277 MHZ	1809880-07	21
1	E1	I C DEC 7490	1909051	22
4	E6,E10,E11,E12	I C DEC 7492	1909053	23
3	E2,E5, E7	I C DEC 7493	1909054	24
1	E9	I C DEC 74H00	1909056	25
1	E4	I C DEC 74H74	1909657	26
3	E3,E8,E13	I C DEC 74161	1910650	27
2		EYELET (6S 4-7)	9006732	28
1		HANDLE MAGENTA	9008337-03	29

FIRST USED ON OPTION MODEL: PDP 11

PARTS LIST

ETCH BOARD REV B

ORIGINATED	CHANGE NO.	REVISIONS	REV
			A

DEC NO.	EIA NO.	DEC NO.	EIA NO.
		D662	1N645
		DEC 3009B	2N3646

SEMICONDUCTOR CONVERSION CHART

DRN. DATE 1-4-72
CHK'D DATE
ENG. DATE
PROJ. ENG. DATE
PROD. DATE

NEXT HIGHER ASSY B-DD-DH11-D

SCALE NONE

SHEET 1 OF 2

digital EQUIPMENT CORPORATION MAYNARD, MASSACHUSETTS

TITLE DH11 DCH CLOCK

SIZE D CODE CS NUMBER M4540-D-1 REV. A

DIST.

This drawing and specifications, herein, are the property of Digital Equipment Corporation and shall not be reproduced or copied or used in whole or in part as the basis for the manufacture or sale of items without written permission. COPYRIGHT © 1972
DIGITAL EQUIPMENT CORPORATION

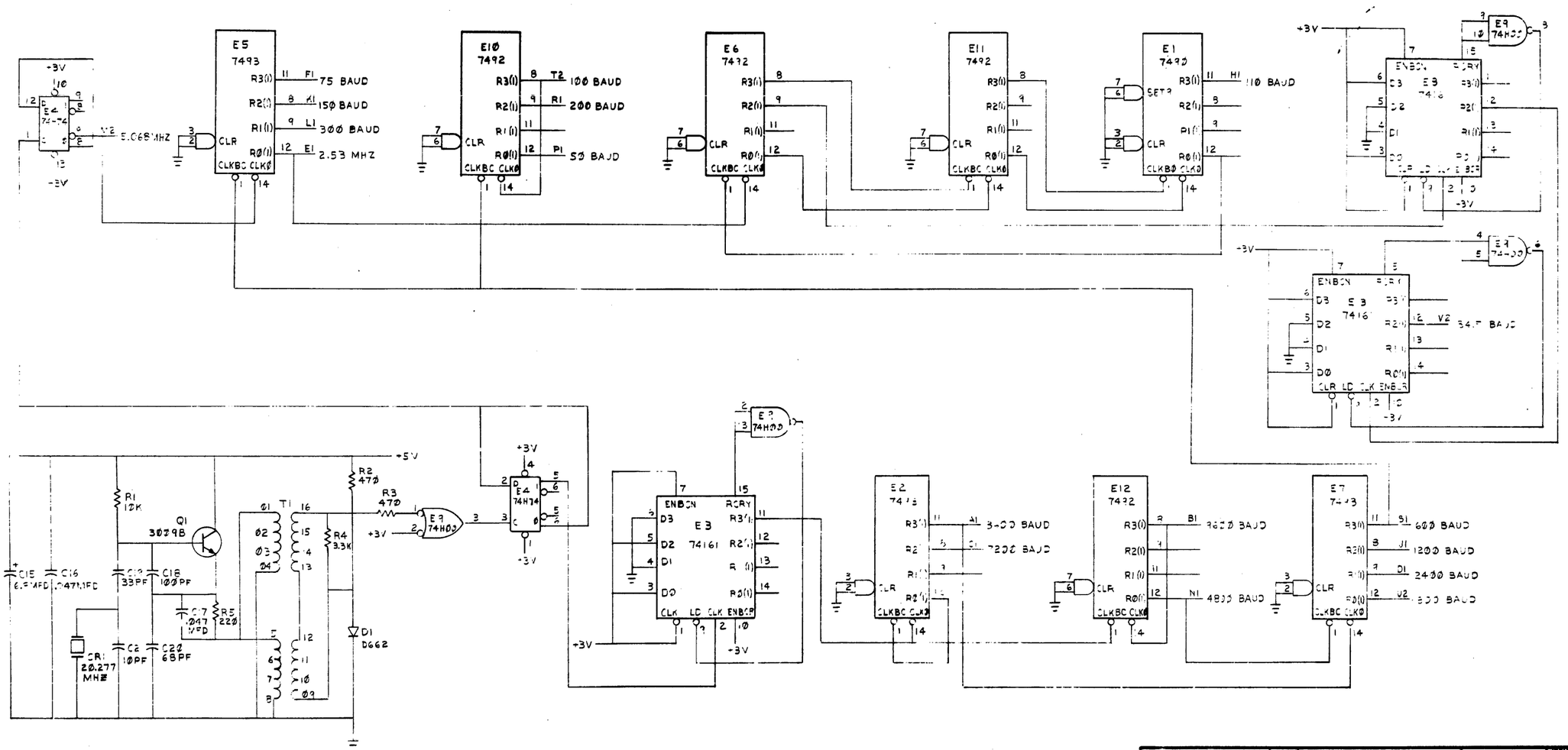

FIRST USED ON OPTION/MODEL	QTY.	DESCRIPTION	PART NO.	ITEM NO.
PDP 11		PARTS LIST		

UNLESS OTHERWISE SPECIFIED DIMENSION IN INCHES. TOLERANCES
DECIMALS .XXX = .005 .XX = .02 .X = .1
ANGLES ±0° 30'
REMOVE BURRS AND BREAK SHARP CORNERS SURFACE QUALITY ✓
MATERIAL —/—
FINISH —/—

DRN. DATE 9-29-72
CHK. DATE 10-1-72
ENG. DATE 1-16-73
PROJ. ENG. DATE 1-16-73
PROD. DATE 1-23-73

[redacted] EQUIPMENT CORPORATION
MAYNARD MASSACHUSETTS

TITLE DH11-DC11 CLOCK

NEXT HIGHER ASSY. B-DD-DH11-0
SCALE NONE
SHEET 2 OF 2

SIZE D CODE CS NUMBER M4540-0-1 REV. A
DIST.

REVISIONS		
CHK	CHANGE NO	REV

DRAWING 40-522 1968-69
DEC FORM NO DRD 103-B

"THIS DRAWING AND SPECIFICATIONS, HEREIN, ARE THE PROPERTY OF DIGITAL EQUIPMENT CORPORATION AND SHALL NOT BE REPRODUCED OR COPIED OR USED IN WHOLE OR IN PART AS THE BASIS FOR THE MANUFACTURE OR SALE OF ITEMS WITHOUT WRITTEN PERMISSION. COPYRIGHT ©1977 DIGITAL EQUIPMENT CORPORATION"

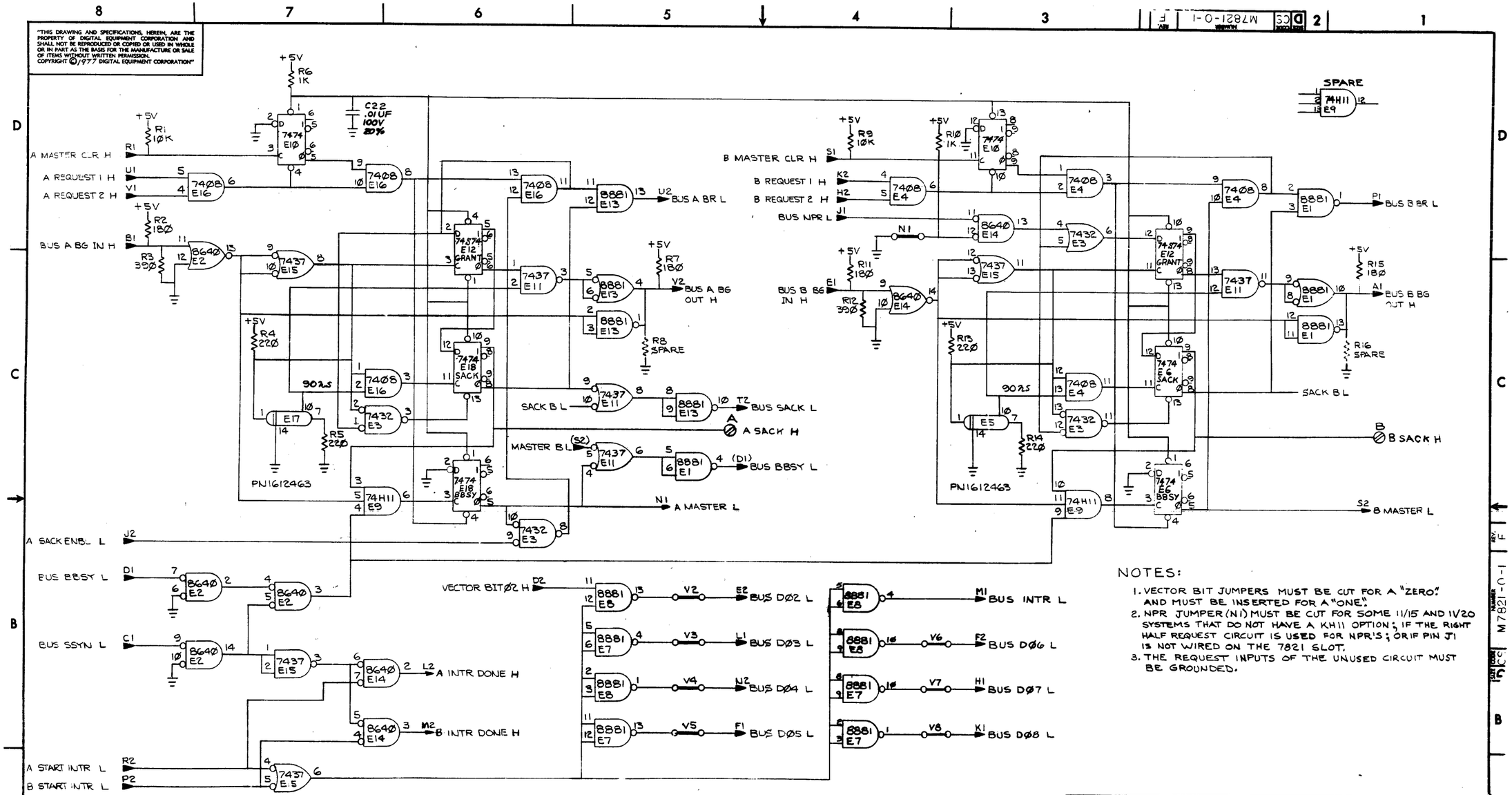

NOTES:

1. VECTOR BIT JUMPERS MUST BE CUT FOR A "ZERO" AND MUST BE INSERTED FOR A "ONE".
2. NPR JUMPER (N1) MUST BE CUT FOR SOME 11/15 AND 11/20 SYSTEMS THAT DO NOT HAVE A KH11 OPTION; IF THE RIGHT HALF REQUEST CIRCUIT IS USED FOR NPR'S; OR IF PIN J1 IS NOT WIRED ON THE 7821 SLOT.
3. THE REQUEST INPUTS OF THE UNUSED CIRCUIT MUST BE GROUNDED.

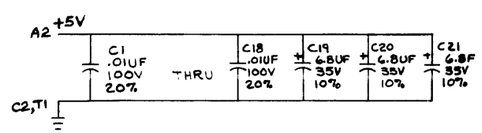

DEC DELAY LINE	14	—
DEC 8640	1	8
IC TYPE	GND	+5V

GND AND 5V ARE USUALLY PIN 7 AND 14 RESPECTIVELY EXCEPTIONS ARE STATED ABOVE

IC PIN LOCATIONS

QTY	REF. DESIGNATION	DESCRIPTION	PART NO.	ITEM NO.

FIRST USED ON OPTION MODEL

PARTS LIST

ETCH BOARD REV. D

REVISED & REDRAWN 2/2/ 00007 F

REV.	CHANGE NO.	REVISIONS

DEC NO.	EIA NO.	DEC NO.	EIA NO.

SEMICONDUCTOR CONVERSION CHART

DRN. DATE 11 AUG 77
CHKD. DATE
ENG. DATE
PROJ. ENG. DATE
PROD. DATE

NEXT HIGHER ASSY

SCALE
SHEET 1 OF 1

digital

TITLE INTERRUPT CONTROL M7821

SIZE D CODE CS NUMBER M7821-0-1 REV. F

DIST.

M7821-0-1 D CS F

THIS SCHEMATIC IS FURNISHED ONLY FOR TEST AND MAINTENANCE PURPOSES. THE CIRCUITS ARE PROPRIETARY IN NATURE AND SHOULD BE TREATED ACCORDINGLY
COPYRIGHT 1970 BY DIGITAL EQUIPMENT CORPORATION

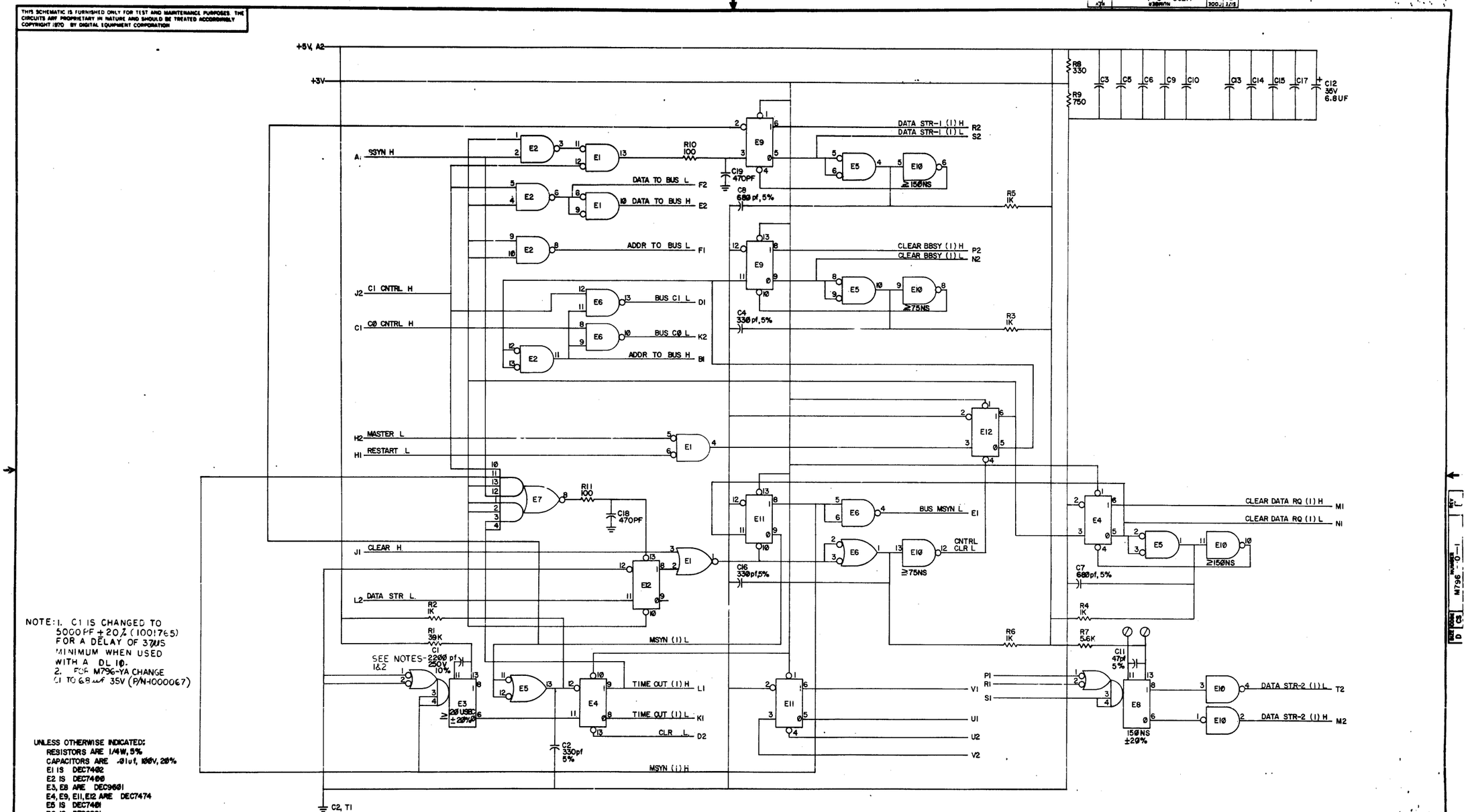

NOTE: 1. C1 IS CHANGED TO 5000PF ± 20% (100:765) FOR A DELAY OF 37μS MINIMUM WHEN USED WITH A DL 10.
2. FOR M796-YA CHANGE C1 TO 6.8μf 35V (P/N-1000067)

UNLESS OTHERWISE INDICATED:
RESISTORS ARE 1/4W, 5%
CAPACITORS ARE .01uf, 100V, 20%
E1 IS DEC7402
E2 IS DEC7400
E3, E8 ARE DEC9601
E4, E9, E11, E12 ARE DEC7474
E5 IS DEC7401
E6 IS DEC8881
E7 IS DEC74H55
E10 IS DE7404
⊘ = SPLIT LUGS

REVISIONS			
CHG	CHG NO	REV	
	00001	A	
	00002	B	
	00003	C	

TRANSISTOR & DIODE CONVERSION CHART

DEC	EIA	DEC	EIA

EQUIPMENT CORPORATION
MAYNARD, MASSACHUSETTS

TITLE: UNIBUS MASTER CONTROL M796

SIZE	CODE	NUMBER	REV
D	CS	M796 -0-1	C

PRINTED CIRCUIT REV. C

DEC FORM 1/0.

THIS SCHEMATIC IS FURNISHED ONLY FOR TEST AND MAINTENANCE PURPOSES. THE CIRCUITS ARE PROPRIETARY IN NATURE AND SHOULD BE TREATED ACCORDINGLY.
COPYRIGHT 1969 BY DIGITAL EQUIPMENT CORPORATION

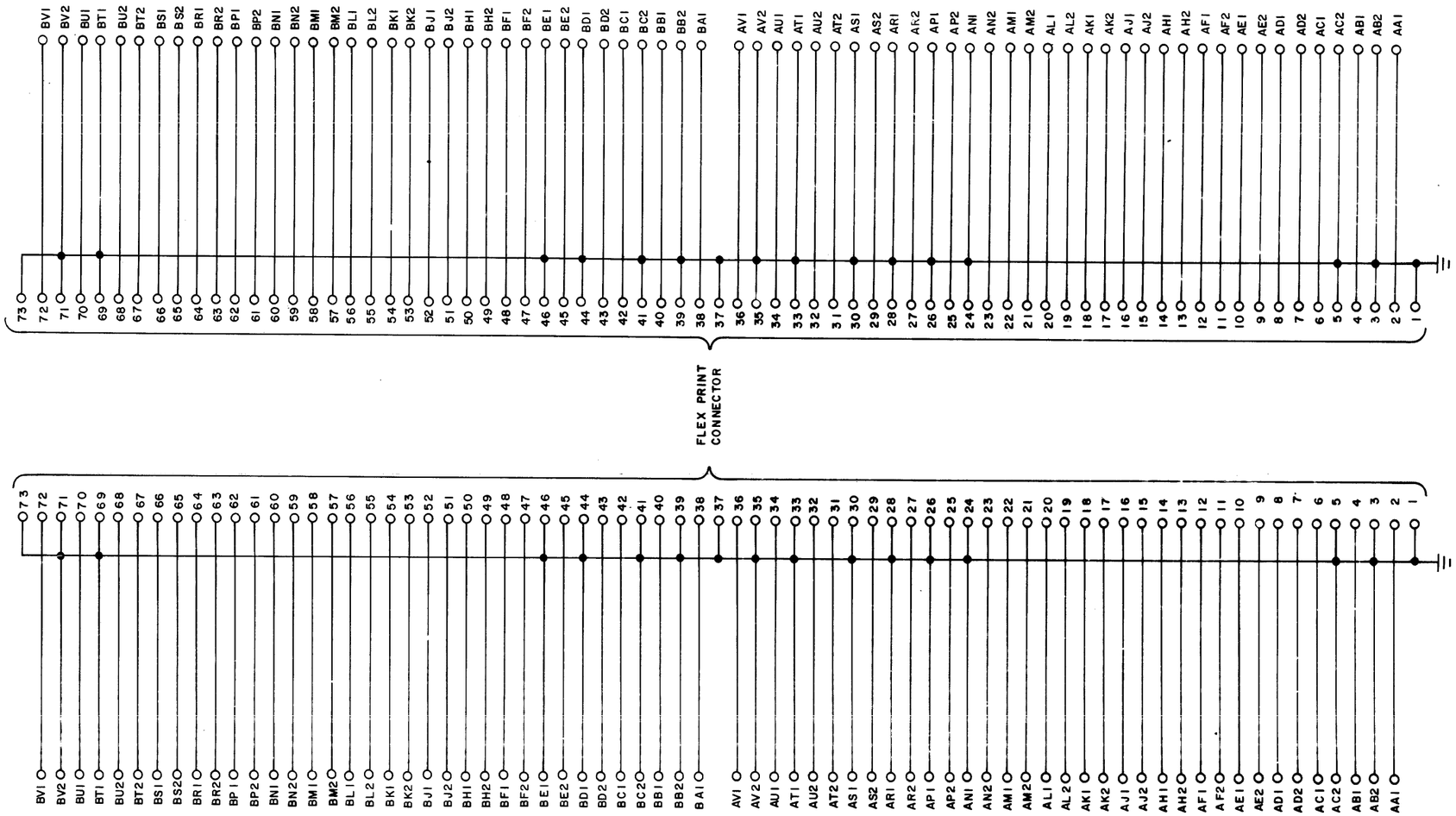

REVISIONS		
CHK	CHG NO.	REV
	00001	A
	00002	B
	00004	C

DEC FORM NO. DR0102

DRN.		DATE 11-6-69
CHK'D		DATE 11-6-69
ENG.		DATE 7-17-70
PROD.		DATE 3/26/70

TRANSISTOR & DIODE CONVERSION CHART

DEC	EIA	DEC	EIA

[redacted]
EQUIPMENT CORPORATION
MAYNARD, MASSACHUSETTS

TITLE INTERNAL BUS CONNECTOR M920

SIZE	CODE	NUMBER	REV.
C	CS	M920-0-1	C

PRINTED CIRCUIT REV. B

DIST. 324,434,435

PINK

SIZE C | CODE CS | NUMBER M920-0-1 | REV. C

THIS DOCUMENT IS PROVIDED FOR INSTALLATION AND MAINTENANCE PURPOSES. THE INFORMATION HEREIN IS PROPRIETARY IN NATURE AND SHOULD BE TREATED ACCORDINGLY
COPYRIGHT 1971 DIGITAL EQUIPMENT CORPORATION

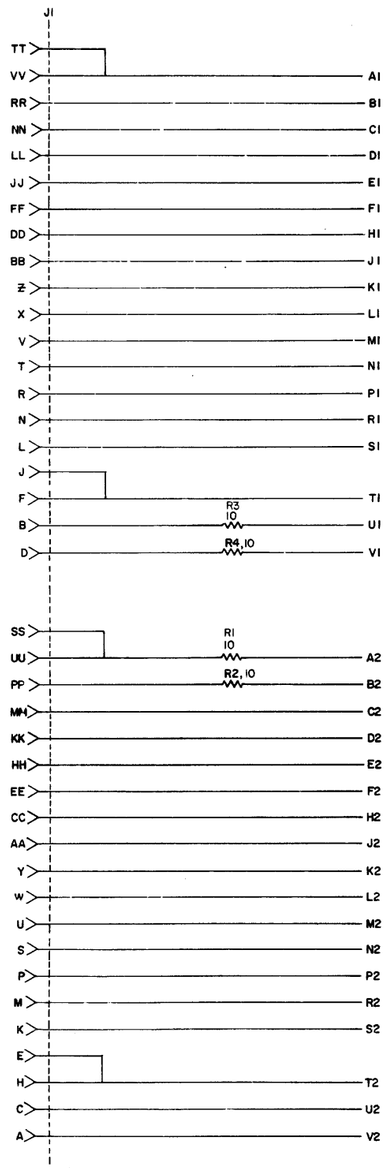

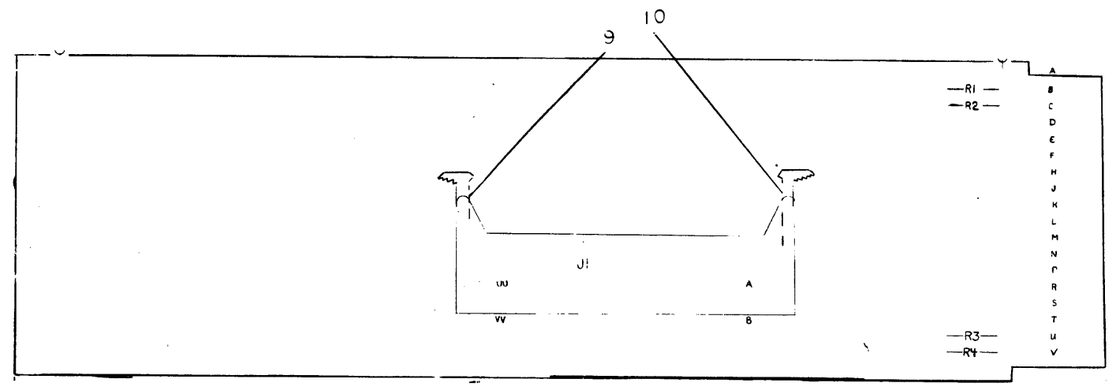

QTY.	REF. DESIGNATION	DESCRIPTION	DEC PART NO.	ITEM
1		LEFT LATCH	1209941-03	10
1		RIGHT LATCH	1209941-04	9
1		HANDLE, FLIP CHIP - MAGENTA	9008337-06	8
2		EYELET	9006732	7
4	R1, 2, 3, 4,	RES. 10 kW 10%	1300170	6
1	J1	BERG HEADER	1209941	5
1		ETCHED CIRCUIT BOARD	5009754	4
		MODULE ECO HISTORY	B-MH-M971-0-6	3
		ASSY/DRILLING HOLE LAYOUT	D-AH-M971-0-5	2
		X-Y COORDINATE HOLE LOCATION	K-CO-M971-0-4	1

PARTS LIST

TRANSISTOR & DIODE CONVERSION CHART			
DEC	EIA	DEC	EIA

[redacted]

EQUIPMENT CORPORATION
MAYNARD, MASSACHUSETTS

TITLE CABLE INTERFACE BOARD #2

SIZE	CODE	NUMBER	REV
D	CS	M971-0-1	8

PRINTED CIRCUIT REV. B

DRAWN B.J. Hale DATE 8/24/71
CHK'D Nancy Hoppe DATE 10-1-71
ENGR'G DATE
PROD DATE

REVISIONS
SYM CHG NO REV
A 00001 B

DEC FORM NO. 983 116

SIZE D CODE CS NUMBER M971-0-1 REV 8

THIS SCHEMATIC IS FURNISHED ONLY FOR TEST AND MAINTENANCE PURPOSES. THE CIRCUITS ARE PROPRIETARY IN NATURE AND SHOULD BE TREATED ACCORDINGLY.
COPYRIGHT 1971 BY DIGITAL EQUIPMENT CORPORATION

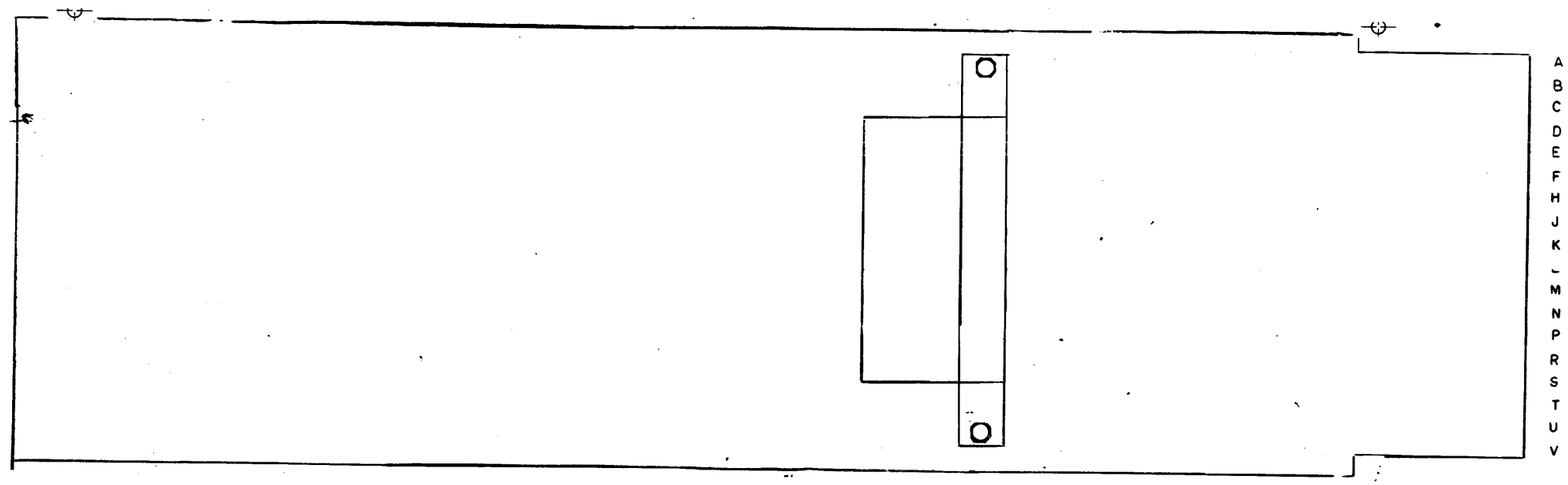

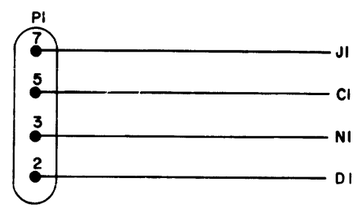

QTY.	REF DESIGNATION	DESCRIPTION	DEC PART NO.	ITEM NO.
		PARTS LIST		
2		RIVETS	9007266	13
~~4~~		~~FEED THRU BUSHING~~	~~9000901~~	~~12~~
2		WASHER	9006693	11
~~8~~		~~NUT, KEP~~	~~9006557~~	~~10~~
~~2~~		~~SCREW 4-40 X 3/8LG~~	~~9006011~~	~~9~~
1		handle FLIP CHIP - MAGENTA	9008337-06	8
2		eyelet	9006732	7
4		PINS	1209456-01	6
1		PIN HOUSING	1209340-0-0	5
1		ETCHED CIRCUIT BOARD	5009587	4
		MODULE ECO HISTORY	B-AH-M973-0-6	3
		ASSY/DRILLING HOLE LAYOUT	B-AH-M973-0-5	2
		X-Y COORDINATE HOLE LOCATION	K-CC-M973-0-4	1

REVISIONS			
CHK	CHG NO.	REV	
	000001	A	
	000002	B	

DRN. B. J. Hale DATE 5/11/71
CHK'D N. L. Miller DATE 5-12-71
ENG. S. Shammas DATE 5/21/71
PROD. DATE

TRANSISTOR & DIODE CONVERSION CHART

DEC	EIA	DEC	EIA

digital EQUIPMENT CORPORATION MAYNARD, MASSACHUSETTS

TITLE TTY CABLE CONNECTOR

SIZE C | CODE CS | NUMBER M973-0-1 | REV B

PRINTED CIRCUIT REV. A

REV F | NUMBER M973-0-1 | SIZE C | CODE CS

DEC FORM NO. DRC 102

THIS SCHEMATIC IS FURNISHED ONLY FOR TEST AND MAINTENANCE PURPOSES. THE CIRCUITS ARE PROPRIETARY IN NATURE AND SHOULD BE TREATED ACCORDINGLY.
COPYRIGHT 1967 BY DIGITAL EQUIPMENT CORPORATION

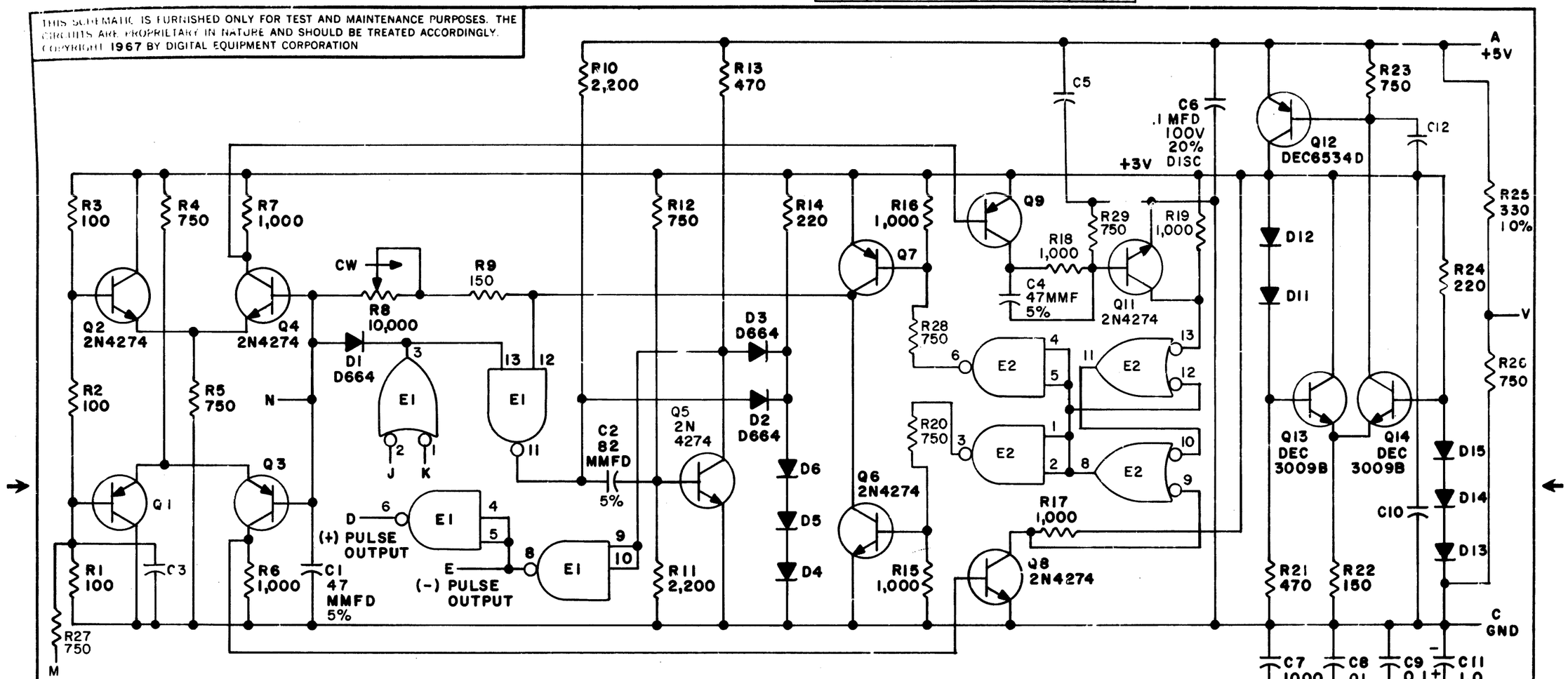

UNLESS OTHERWISE INDICATED:
DIODES ARE D662
CAPACITORS ARE .01 MFD, 100V, 20%
RESISTORS ARE 1/4W, 5%
E1 IS DEC7400, E2 IS DEC74H00
PIN 7 ON IC = GND
PIN 14 ON IC = +5V
TRANSISTORS ARE DEC4258
R8 IS A HELITRIM POT 10%-78PR

PARTS LIST A-PL-M401-0-0

REVISIONS		
REV.	CHG NO.	CHK
A	6769	
B	6844	
C	00001	
D	00002	
E	00003	
F	00004	
J	00005	
K	00006	
L	00007	
M	00008	

DRN.	M. Waller	DATE	9-11-67
CHK'D		DATE	9/13/67
ENG.		DATE	9/13/67
PROD.		DATE	

TRANSISTOR & DIODE CONVERSION CHART

DEC	EIA	DEC	EIA
DEC3009B	2N3009	D662	IN645
DEC4258	2N4258	D664	IN3606
2N4274	SAME		
DEC6534D	MPS6534		

digital EQUIPMENT CORPORATION
MAYNARD, MASSACHUSETTS

TITLE VARIABLE CLOCK M401

SIZE	CODE	NUMBER	REV
B	CS	M401-0-1	M

PRINTED CIRCUIT REV. M

DEC FORM NO.
DRB 102

4

THIS SCHEMATIC IS FURNISHED ONLY FOR TEST AND MAINTENANCE PURPOSES. THE CIRCUITS ARE PROPRIETARY IN NATURE AND SHOULD BE TREATED ACCORDINGLY.
COPYRIGHT 1971 BY DIGITAL EQUIPMENT CORPORATION

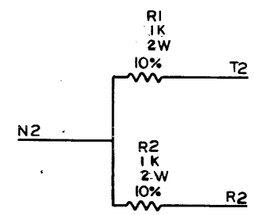

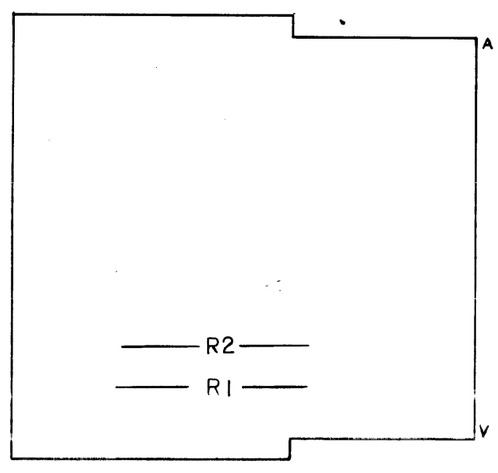

QTY.	REF DESIGNATION	DESCRIPTION	DEC PART NO.	ITEM NO.
2	R1,R2	RES. 1K, 2W, 10%	1300369	5
1		ETCHED CIRCUIT BOARD	5009588	4
		MODULE ECO HISTORY	~~B-AM-W404-0-6~~	3
		ASSY/DRILLING HOLE LAYOUT	D-AM-W404-0-5	2
		X-Y COORDINATE HOLE LOCATION	K-CO-W404-0-4	1
		PARTS LIST		

REVISIONS			
CHK	CHG NO.	REV.	
	00001	B	

S.SHAMMAS

DRN.		DATE 5/11/71
CHK'D		DATE 5/11/71
ENG.	S. Shammas	DATE 5/21/71
PROD.		DATE 5-21-71

TRANSISTOR & DIODE CONVERSION CHART

DEC	EIA	DEC	EIA

[redacted]
EQUIPMENT CORPORATION
MAYNARD, MASSACHUSETTS

TITLE
DTR JUMPER

SIZE	CODE	NUMBER	REV
C	CS	W404-0-1	B

PRINTED CIRCUIT REV. C

DIST. 3 2 4 1 4 3 4 1 4 2 5 2

DEC FORM NO.

REV. B
NUMBER W404-0-1
SIZE C CODE CS

This drawing and specifications, herein, are the property of Digital Equipment Corporation and shall not be reproduced or copied or used in whole or in part as the basis for the manufacture or sale of items without written permission

PARTS REFERENCE

ITEM NO	DRAWING REFERENCE	DESCRIPTION		PART NUMBER	QUANTITY
1	E1	DEC 384	IC	1505486	1
2	C1 THRU C5	.01 UF 100V 20%	CAP	1001610	5
3	C6 THRU C9	.47 UF 35V 10%	CAP	1005965	4
4	C10 THRU C13	10 PF 100V 5%	CAP	1000006	4
5	C14 THRU C17	.001 UF 250V 20%	CAP	1000043	4
6	C18, C19	6.8 UF 35V 20	CAP	1000057	2
7	R1, R2, R3, R7	750 1/4W 5%	RES	1301401	4
8	R4, R5, R6, R8	750 1W 5%	RES	1302385	4
9	R9 THRU R12	560 1/2W 5%	RES	1300318	4
10	R13 THRU R16	82 1/4W 5%	RES	1301477	4
11	R17, R20, R21, R23	10K 1/4W 5%	RES	1300479	4
12	R18, R19, R22, R24	3.3K 1/4W 5%	RES	1300439	4
13	R25, R29, R31, R34	4.5K 1/4W 5%	RES	1300391	4
14	R26, R28, R32, R35	470 1/2W 5%	RES	1300316	4
15	R27, R30, R33, R36, R37 THRU R40	1.5K 1/2W 5%	RES	1300249	8
16	D1 THRU D16	D664 DIODE		1100114	16
17	Q1 THRU Q4	DEC 6534D TRANSISTOR		1503409-00	4
REF		20 MA TO TTL CONVERTER		A-PL-M596-0-0	-#

COMPONENT PLACEMENT

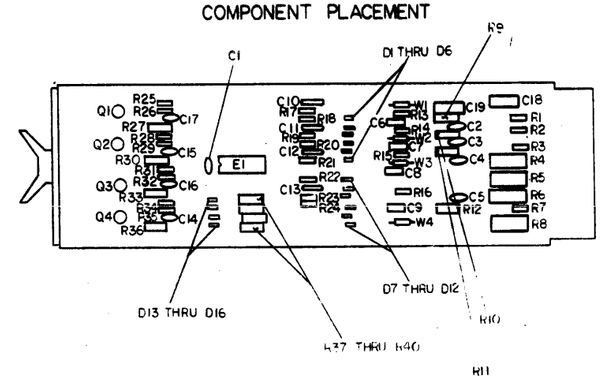

PIN NOMENCLATURE

MODULE	PROCESSOR
A	

1. DETAILS ON COMPONENTS ARE NOTED IN THE PARTS REFERENCE, PLACEMENT IS NOTED IN THE COMPONENT PLACEMENT DIAGRAM. CAPACITORS WITHOUT NOTED VALUES ARE .01 MFD.

2. GND AND +5V ARE USUALLY PIN 7 AND PIN 14, RESPECTIVELY. EXCEPTIONS ARE:

IC TYPE	GND	+5V
DEC 384	PIN 1	PIN 8

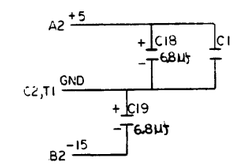

ETCH REV C

FIRST USED ON OPTION / MOD	QTY.	DESCRIPTION	PART NO.	ITEM NO.
PDP-11		PARTS LIST		

UNLESS OTHERWISE SPECIFIED
UNLESS OTHERWISE SPECIFIED
DIMENSION IN INCHES
TOLERANCES
DECIMALS ± .005 FRACTIONS ± 1/64 ANGLES ± 0°30'
FINAL SURFACE QUALITY
REMOVE BURRS AND BREAK SHARP CORNERS

MATERIAL —#—

FINISH —#—

DRN. DATE 5-26-71
CHK. DATE 5-27-71
ENG. DATE 5-26-71
PROJ. ENG. DATE 5-26-71
MOD. DATE

NEXT HIGHER ASSY

SCALE —#—
SHEET 1 OF 2

[redacted] EQUIPMENT CORPORATION
MAYNARD MASSACHUSETTS

TITLE 20MA TO TTL CONVERTER

SIZE D CODE CS NUMBER M596-0-1 REV. 3

REVISIONS		
CHG.	CHANGE NO	REV
	M596-00001 MC NAME: A	3

DEC FORM NO DRO 189A

This drawing and specifications, herein, are the property of Digital Equipment Corporation and shall not be reproduced or copied or used in whole or in part as the basis for the manufacture or sale of items without written permission.

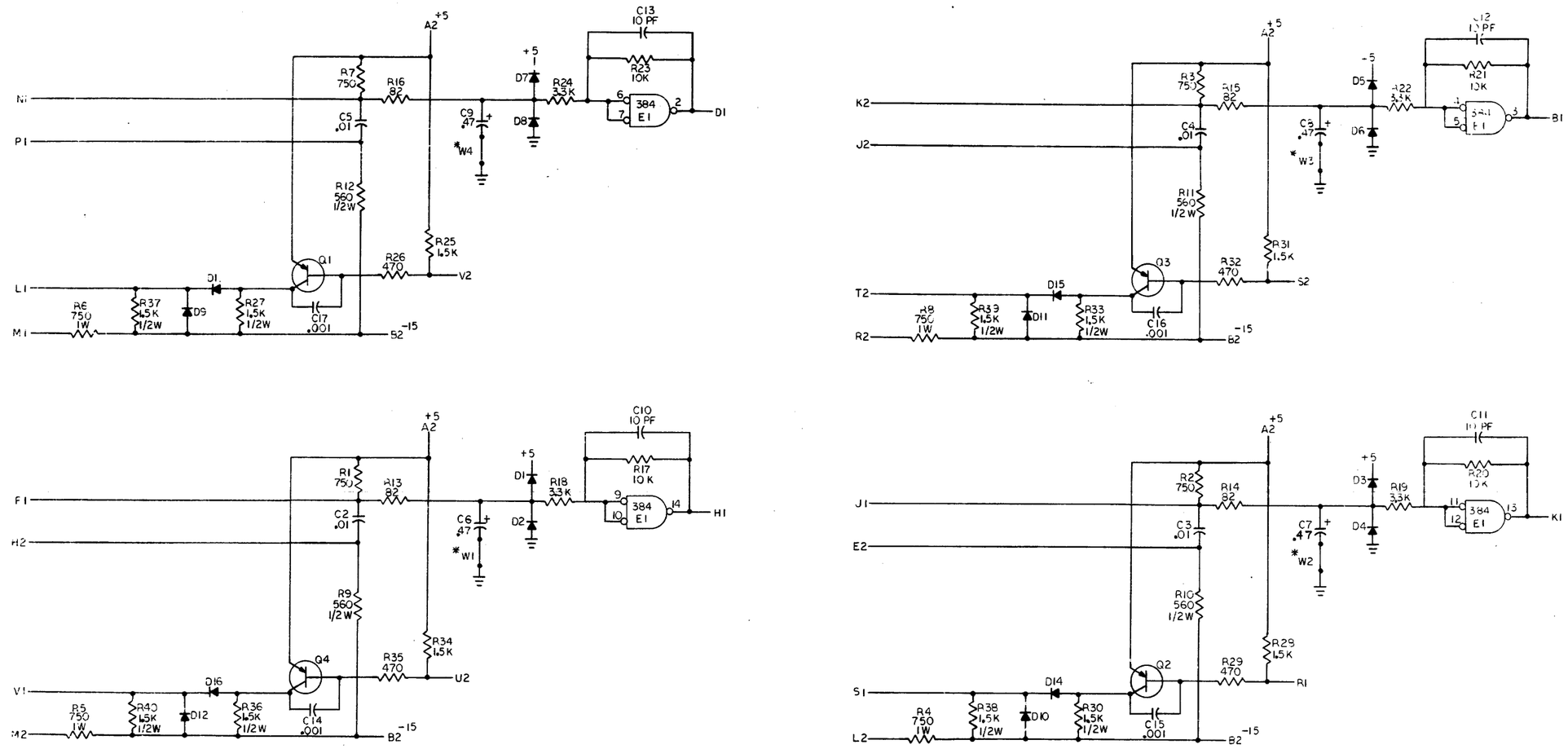

NOTES:

1. DIODES ARE D664.
2. TRANSISTORS ARE 6534D.
3. RESISTORS ARE 1/4W-5%.
4. CAPACITORS ARE IN MFD UNLESS OTHERWISE STATED.

* = MACHINE INSERTED JUMPER.

FIRST USED ON OPTION/MODEL	QTY.	DESCRIPTION	PART NO.	ITEM NO.
PDP11		PARTS LIST		

UNLESS OTHERWISE SPECIFIED DIMENSION IN INCHES. TOLERANCES

DECIMALS	ANGLES
.XXX = .005	±0° 30'
.XX = .02	
.X = .1	

REMOVE BURRS AND BREAK SHARP CORNERS SURFACE QUALITY ✓

MATERIAL

FINISH

		DATE
DRN.	Norm Cayer	20 Nov 71
CHKR.	J.A. Conroy	3-3-71
ENG.	Kent W. Hamm	6-16-71
PROJ. ENG.	Kent W. Hamm	6-16-71
PROD.		

NEXT HIGHER ASSY.

SCALE NONE

SHEET 2 OF 2

EQUIPMENT CORPORATION MAYNARD MASSACHUSETTS

TITLE

20MA TO TTL CONVERTER

SIZE	CODE	NUMBER	REV.
D	CS	M596-0-1	B

DIST.

REVISIONS: REV | CHANGE NO | CHK

DEC FORM NO

This drawing and specifications, herein, are the property of Digital Equipment Corporation and shall not be reproduced or copied or used in whole or in part as the basis for the manufacture or sale of items without written permission.

WIRE TABLE

ITEM NO.	DESCRIPTION AWG	DESCRIPTION COLOR	FROM POINT	FROM CONNECTION	FROM TERM	TO POINT	TO CONNECTION	TO TERM	PRECUT LENGTH
1	14	BLK	3	—	5	8	—	6	12.7"
2	14	RED	1	—	5	6	—	6	12.7"
3	14	ORN	4	—	5	5	—	6	12.7"
4	14	BLU	2	—	5	7	—	6	12.7"

NOTES:

1. USE TIE WRAPS (ITEM #8) EVERY 4 INCHES

DO NOT SCALE

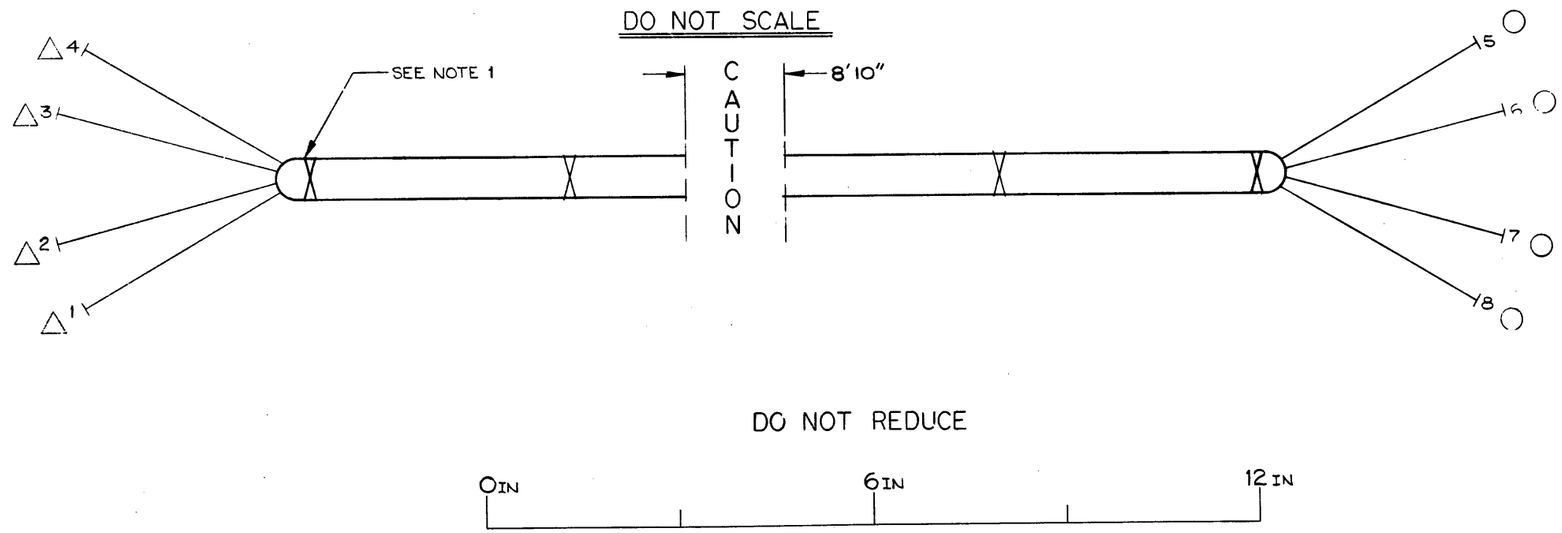

DO NOT REDUCE

X	A R	CABLE TIES SST 1.5 M	9007880	8
				7
○	4	CONN. SOLDERLESS ARKLESS #50906	9007919	6
△	4	CONN. SOLDERLESS ARKLESS #503634	9007928	5
	A/R	WIRE #14 AWG STRD. TEF. INS. BLU	9107370-66	4
	A/R	WIRE #14 AWG STRD. TEF. INS. ORN	9107370-33	3
	A/R	WIRE #14 AWG STRD. TEF. INS. RED	9107370-22	2
	A/R	WIRE #14 AWG STRD. TEF. INS. BLK	9107370-00	1
	QTY.	DESCRIPTION	PART NO.	ITEM NO.

PARTS LIST

FIRST USED ON OPTION/MODEL: DMII

UNLESS OTHERWISE SPECIFIED DIMENSION IN INCHES. TOLERANCES

DECIMALS	ANGLES
.XXX = .005	±0° 30'
.XX = .02	
.X = .1	

REMOVE BURRS AND BREAK SHARP CORNERS SURFACE QUALITY ✓

MATERIAL: SEE PARTS LIST

FINISH: —

DRN. T. Guillo	DATE 6-15-71	digital EQUIPMENT CORPORATION MAYNARD MASSACHUSETTS
CHK'D R. Cook	DATE 6-21-71	TITLE: POWER HARNESS
ENG.	DATE	
PROJ. ENG.	DATE	
PROD.	DATE 6/22/71	

NEXT HIGHER ASSY.: D-UA-DMII-A-Ø

SCALE 1/1

SHEET 1 OF 1

SIZE	CODE	NUMBER	REV.
D	IA	7008493-0-0	A

DIST. G

MK

REVISIONS			
CHK	CHANGE NO.		REV.
	7008493-00001		A
		V. BASTIANI	

DEC FORM NO. DRD 188-A

SIZE CODE D IA NUMBER 7008493-0-0 REV A

THIS SCHEMATIC IS FURNISHED ONLY FOR TEST AND MAINTENANCE PURPOSES. THE CIRCUITS ARE PROPRIETARY IN NATURE AND SHOULD BE TREATED ACCORDINGLY.
COPYRIGHT 1971 BY DIGITAL EQUIPMENT CORPORATION

SIZE | CODE | NUMBER | REV

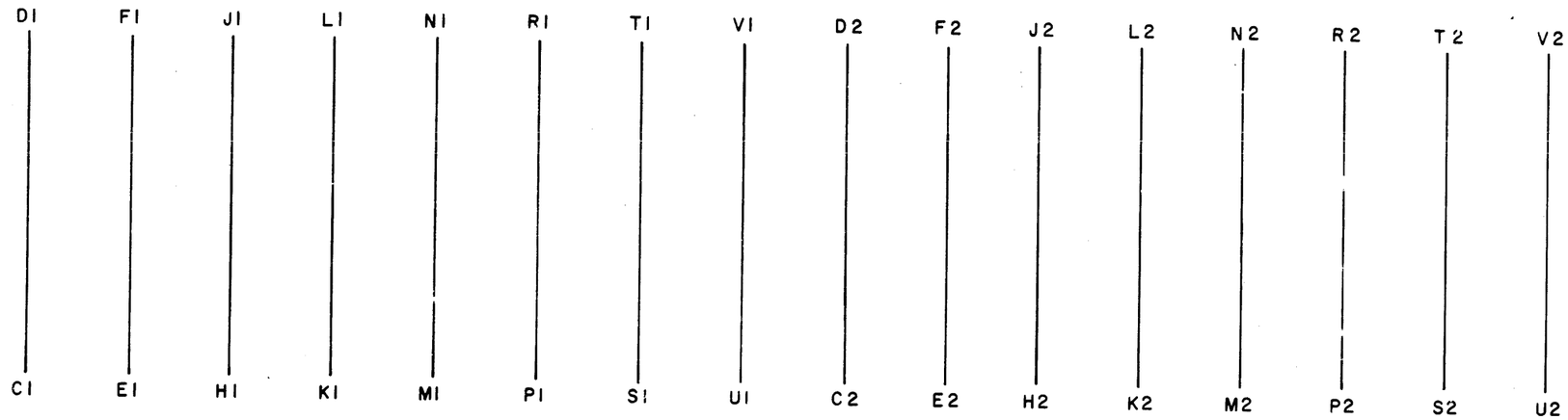

QTY.	DESCRIPTION	DEC PART NO.	ITEM NO.
1	HANDLE, FLIP CHIP - MAGENTA	9008337-06	5
2	EYELET	9006732	4
1	ETCHED CIRCUIT BOARD	5009605	3
	MODULE ECO HISTORY	B-MH-M974-0-6	2
	ASSY/DRILLING HOLE LOCATION	D-AH-M974-0-5	1
	PARTS LIST		

REVISIONS

CHK	ECO NO	REV

DRN.	S. COOPER	DATE	5-13-71
CHK'D	P. A. C. MOORE	DATE	5-14-71
ENG.	E. Shammas	DATE	6-16-71
PROD.		DATE	

TRANSISTOR & DIODE CONVERSION CHART

DEC	EIA	DEC	EIA

digital EQUIPMENT CORPORATION
MAYNARD, MASSACHUSETTS

TITLE
DM 11 MAINTENANCE JUMPER

SIZE	CODE	NUMBER	REV
B	CS	M974-0-1	

PRINTED CIRCUIT REV. A

DEC FORM NO
DRB 102

1316

This drawing and specifications, herein, are the property of Digital Equipment Corporation and shall not be reproduced or copied or used in whole or in part as the basis for the manufacture or sale of items without written permission.

NOTES:

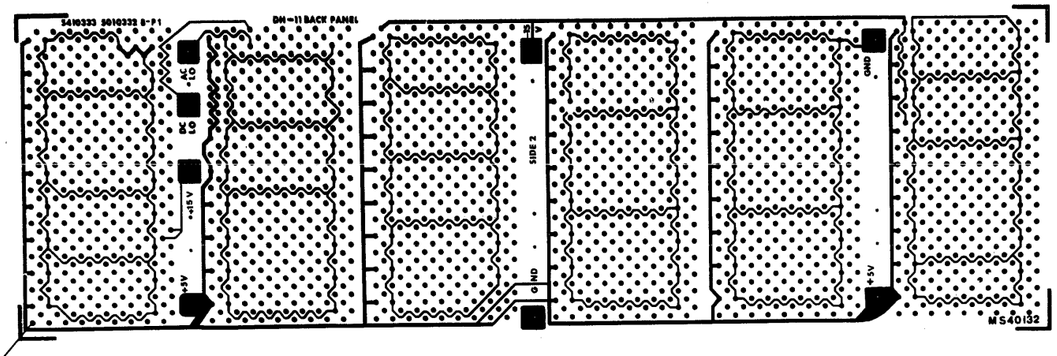

A1

SOLDER SIDE (SIDE 2)

[redacted]

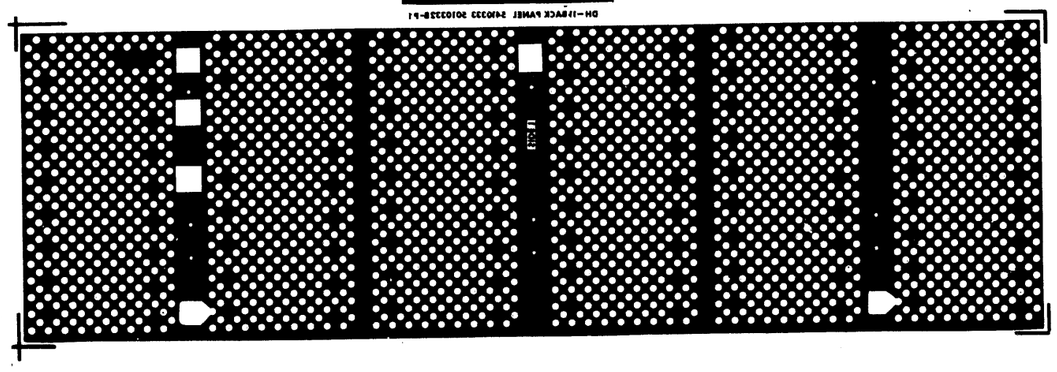

IC TYPE	GND	+ 5V
GND AND 5V ARE USUALLY PIN 7 AND 14 RESPECTIVELY EXCEPTIONS ARE STATED ABOVE		

IC PIN LOCATIONS

QTY	REF DESIGNATION	DESCRIPTION	PART NO.	ITEM NO.
REF		X-Y COORDINATE HOLE LOCATION	K-CO-5410333-0-4	4
REF		ASSY/DRILLING HOLE LAYOUT	D-AH-5410333-0-5	3
REF		MODULE ECO HISTORY	B-MH-5410333-0-6	2
1		ETCHED CIRCUIT BOARD	5010332	1

PARTS LIST

FIRST USED ON OPTION MODEL: PDP 11

ETCH BOARD REV: B

DEC NO.	EIA NO.	DEC NO.	EIA NO.

SEMICONDUCTOR CONVERSION CHART

REV	CHANGE NO.	CHK
B	*	
ORIGINATED		

REVISIONS

J MCNAMARA

5410333-00001

DRN. DATE 1-31-73
CHK'D DATE 2/22/73
ENG. DATE 2-22-73
PROJ. ENG. DATE 2-22-73
PROD. DATE 2-23-73

NEXT HIGHER ASSY: D-AD-7009182-0-0

SCALE: NONE

SHEET 1 OF 1

digital EQUIPMENT CORPORATION MAYNARD, MASSACHUSETTS

TITLE: CIRCUIT SCHEMATIC

SIZE D | CODE CS | NUMBER 5410333-0-1 | REV. A

DIST.

DEC FORM NO DRD 135A

BRUNING 40-522 16499

This drawing and specifications, herein, are the property of Digital Equipment Corporation and shall not be reproduced or copied or used in whole or in part as the basis for the manufacture or sale of items without written permission COPYRIGHT © 1973
DIGITAL EQUIPMENT CORPORATION

NOTES:

NOTES:

1. ALL 19-10459 UART PINS 2 ARE -12 VOLTS.
2. ALL SIGNALS THAT BEGIN WITH TRG BUF" ARE INTERNAL TO THE BOARD AND DO NOT GO TO EXTERNAL FINGERS.

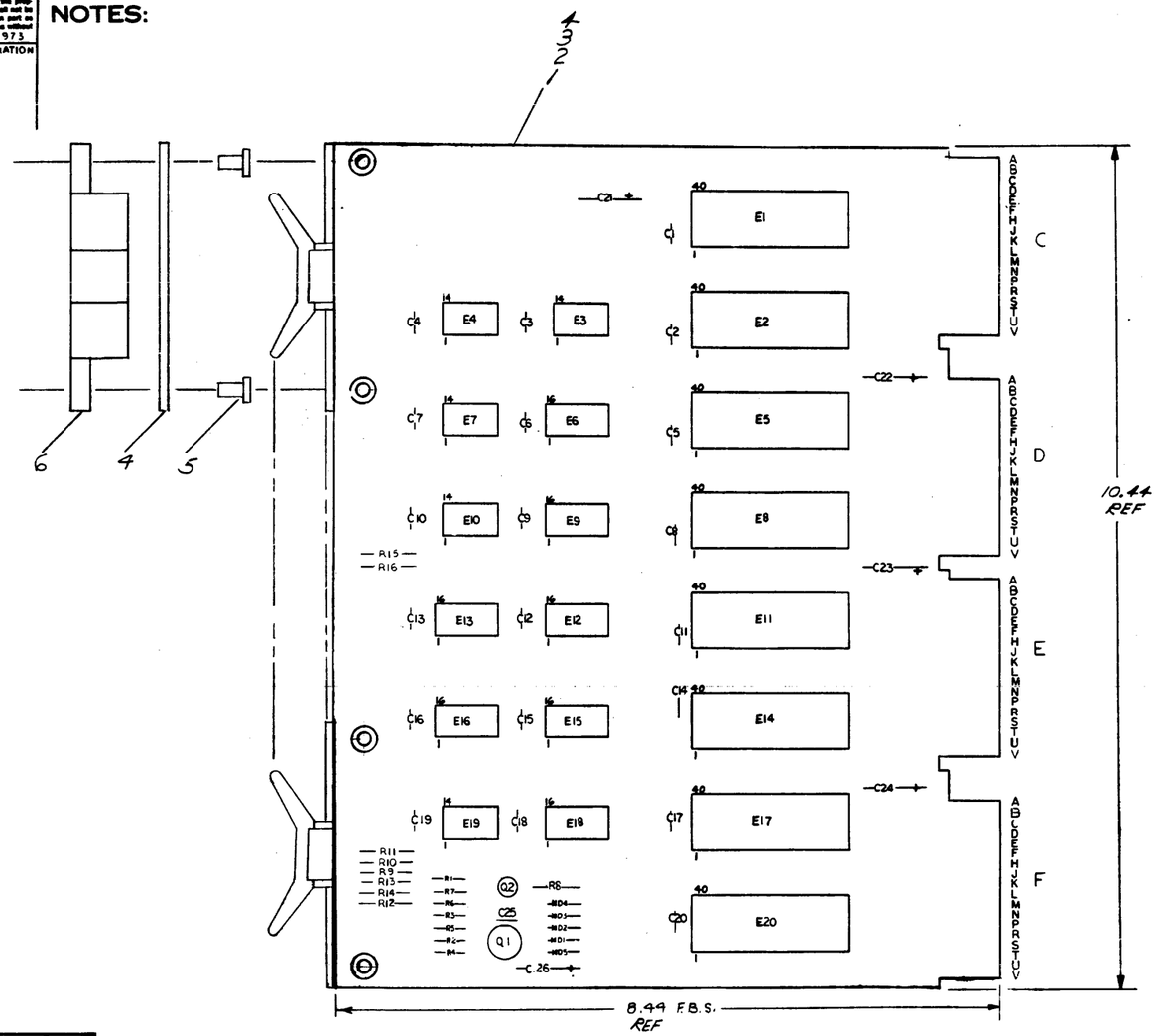

1	C25	CAP 1000 PF, 100V	1000042	24
8	R9 THRU R16	RES 30K 1/4 W, 5%	1302394	23
5	C21 THRU C24, C26	CAP 6.8 µf 35 V	1005306	22
20	C1 THRU C20	CAP .01µf, 50V, 20%	1001670	21
4	D1, D2, D3, D5	DIODE D672	1105275	20
1	D4,	DIODE IN752A	1102808	19
4	R2 THRU R5	RES. 10, 1/4 W, 5%	1301317	18
2	R6, R7	RES. 1K, 1/4 W, 5%	1300365	17
1	R8	RES. 470, 1/2, 5%	1300315	16
1	R1	RES. 220, 1/4 W 5%	1300271	15
1	Q1	TRAN DEC 2904	1501742	14
1	Q2	TRAN DEC 6534D	1503409 00	13
3	E6, E9, E12	IC. DEC 74155	1910656	12
8	E11, E8, E5 E2, E1, E7, E14, E20	IC UART	1910459-01	11
2	E3, E4	IC. DEC 7408	1910155	10
4	E13, E18, E15, E16	IC. DEC 74151	1909936	9
2	E19, E10	IC. DEC 7404	1909686	8
1	E7	IC. DEC 7400	1905575	7
4		HANDLE (FLIP CHIP) MAGENTA	9008337-06	6
8		EYELET	9006732	5
1		ETCHED CIRCUIT BOARD	5010080	4
REF		MODULE ECO HISTORY	B-MH-M7288-06	3
REF		ASSY/DRILLING HOLE LAYOUT	D-AH-M7288-05	2
REF		X-Y COORDINATE HOLE LOCATION	K-CO-M7288-D-4	1
QTY	REF DESIGNATION	DESCRIPTION	PART NO.	ITEM NO.

PARTS LIST

FIRST USED ON OPTION MODEL: PDP 11

ETCH BOARD REV: C

DEC NO.	EIA NO.
DEC 6534D	1503409
DEC 2904	2N 1132
IN752A	—
D672	IN 3653

SEMICONDUCTOR CONVERSION CHART

REV	CHANGE NO.	CHK	REVISIONS
A	DH11-00002	J. McNAMARA 7-11-73	
B	DH11-00010	J. McNAMARA 22-05-75	

DRAWN L. Bolduc DATE 2-14-73
CHECKED DATE 2-22-73
DATE 3-13-73
DATE 4-12-73
DATE 2-23-73

NEXT HIGHER ASSY: B-DD-DH11-Ø
SCALE: NONE
SHEET 1 OF 5

EQUIPMENT CORPORATION
MAYNARD, MASSACHUSETTS

TITLE: MULTIPLE UART CARD LINES Ø-7

CODE: DBS
NUMBER: DH11-Ø-8
REV: B

IC DEC 74153	8	16
IC UART	3	1
IC DEC 74151	8	16
IC TYPE	GND	+5V

GND AND 5V ARE USUALLY PIN 7 AND 14 RESPECTIVELY EXCEPTIONS ARE STATED ABOVE

IC PIN LOCATIONS

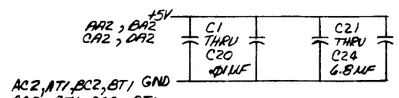

DEC FORM NO. DRD-136A

This drawing and specifications, herein, are the property of Digital Equipment Corporation and shall not be reproduced or copied or used in whole or in part as the basis for the manufacture or sale of items without written permission COPYRIGHT © 1973
DIGITAL EQUIPMENT CORPORATION

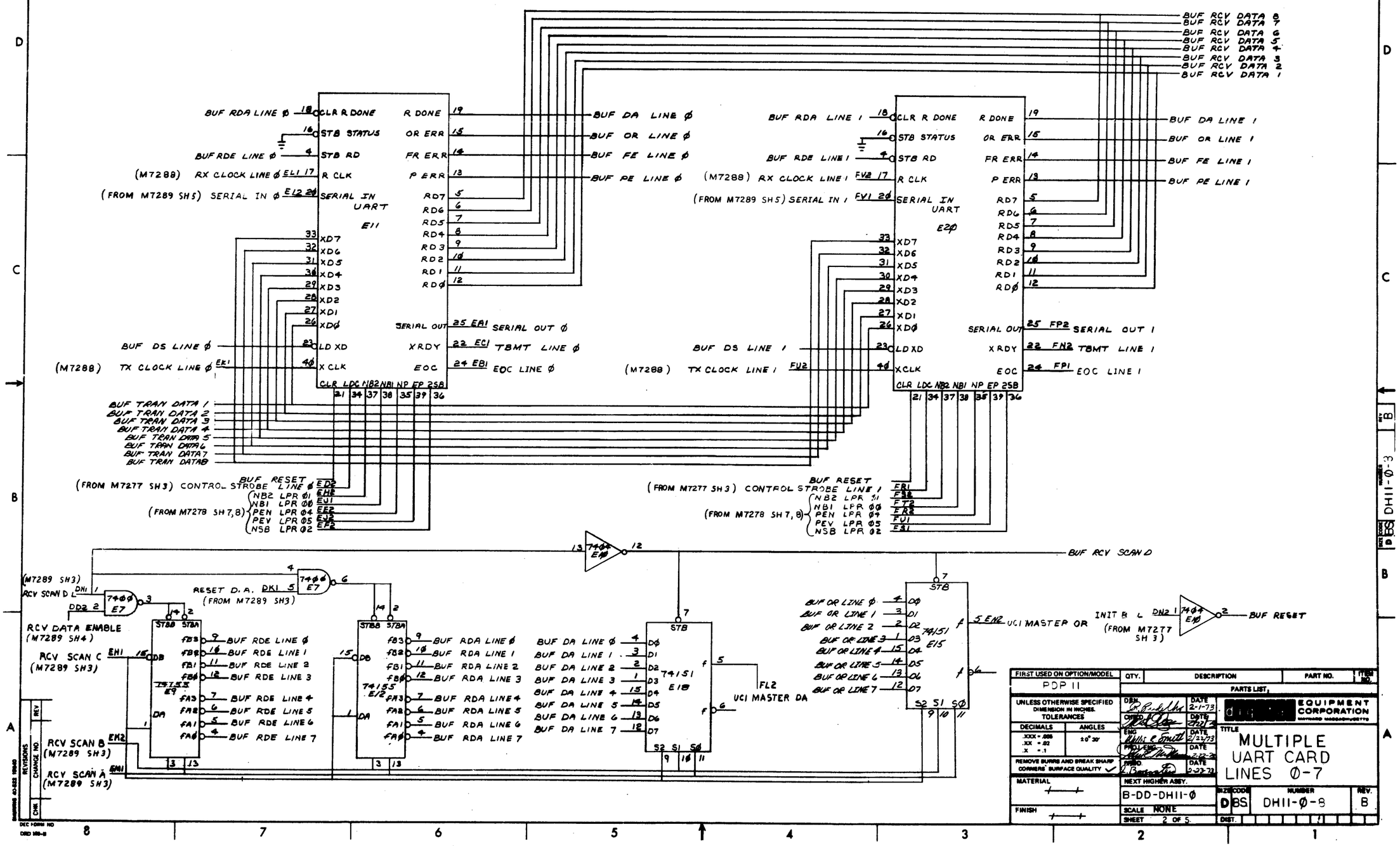

FIRST USED ON OPTION/MODEL	QTY.	DESCRIPTION	PART NO.	ITEM NO.
PDP 11		PARTS LIST		

UNLESS OTHERWISE SPECIFIED DIMENSION IN INCHES. TOLERANCES

DECIMALS	ANGLES
.XXX = .005	±0° 30'
.XX = .02	
.X = .1	

REMOVE BURRS AND BREAK SHARP CORNERS. SURFACE QUALITY ✓

MATERIAL —

FINISH —

		DATE
DRN.	[illegible]	2-1-73
CHKD.	[illegible]	2-2-73
ENG.	[illegible]	2/22/73
PROJ. ENG.	[illegible]	2-22-73
MGRD.	[illegible]	2-22-73

DIGITAL EQUIPMENT CORPORATION MAYNARD, MASSACHUSETTS

TITLE

MULTIPLE UART CARD LINES Ø-7

NEXT HIGHER ASSY. B-DD-DH11-Ø

SCALE NONE

SHEET 2 OF 5

SIZE D CODE BS NUMBER DH11-Ø-8 REV. B

DIST.

REVISIONS: REV. | CHANGE NO. | CHK.

DEC FORM NO DRD 100-B

This drawing and specifications, herein, are the property of Digital Equipment Corporation and shall not be reproduced or copied or used in whole or in part as the basis for the manufacture or sale of items without written permission COPYRIGHT © 1973
DIGITAL EQUIPMENT CORPORATION

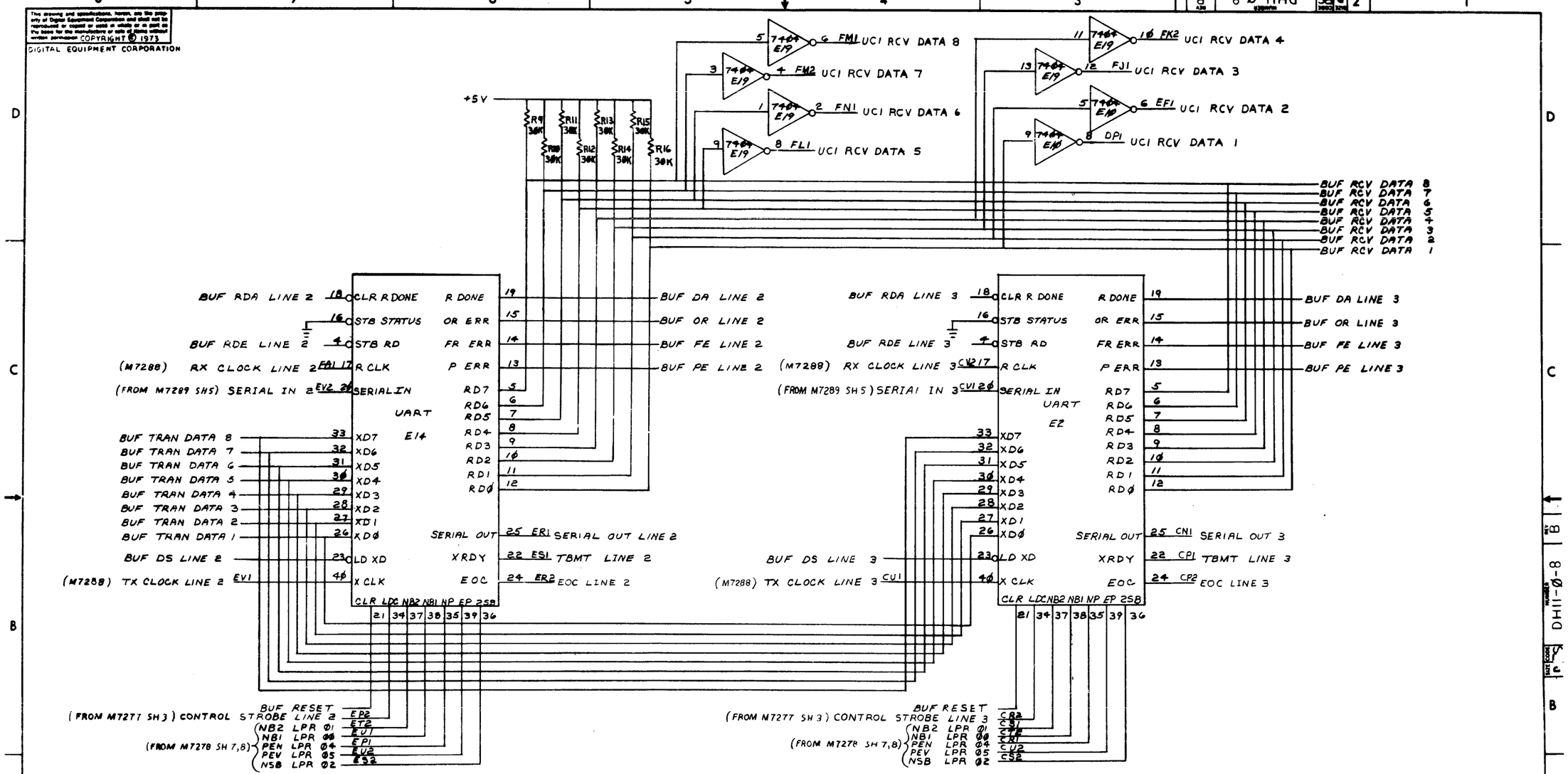

FIRST USED ON OPTION/MODEL	QTY.	DESCRIPTION	PART NO.	ITEM NO.
PDP 11		PARTS LIST		

UNLESS OTHERWISE SPECIFIED DIMENSION IN INCHES. TOLERANCES

DECIMALS	ANGLES
.XXX = .005	±0° 30'
.XX = .02	
.X = .1	

REMOVE BURRS AND BREAK SHARP CORNERS SURFACE QUALITY ✓

MATERIAL

FINISH

		DATE
DRN		2-2-73
CHK'D		2-22-73
ENG		2/22/73
PROJ ENG		2-22-73
PROD		2-23-73

digital EQUIPMENT CORPORATION MAYNARD MASSACHUSETTS

TITLE MULTIPLE UART CARD LINES Ø-7

NEXT HIGHER ASSY. B-DD-DH11-Ø

SCALE NONE

SHEET 3 OF 5

SIZE D CODE BS NUMBER DH11-Ø-8 REV. B

DIST.

REVISIONS: REV | CHANGE NO | CHK

DEC + DIGI NO DRD H11-8

This drawing and specifications, herein, are the property of Digital Equipment Corporation and shall not be reproduced or copied or used in whole or in part as the basis for the manufacture or sale of items without written permission COPYRIGHT © 1973
DIGITAL EQUIPMENT CORPORATION

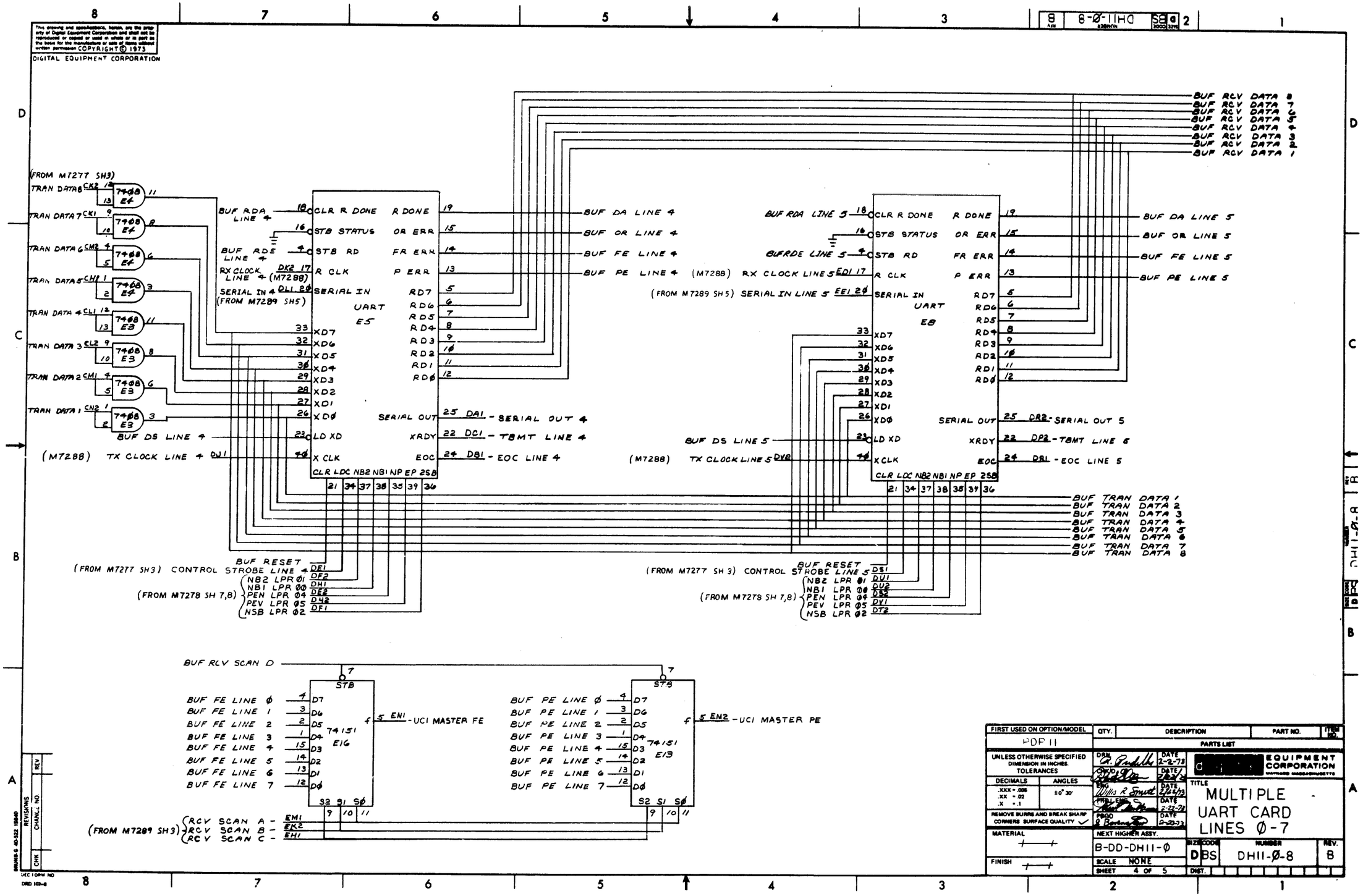

FIRST USED ON OPTION/MODEL	QTY.	DESCRIPTION	PART NO.	ITEM NO.
PDP 11		PARTS LIST		

UNLESS OTHERWISE SPECIFIED DIMENSION IN INCHES TOLERANCES
DECIMALS .XXX = .005 .XX = .02 .X = .1
ANGLES ±0° 30'
REMOVE BURRS AND BREAK SHARP CORNERS SURFACE QUALITY ✓
MATERIAL
FINISH

DRN R. Pudlik DATE 2-2-73
CHKD DATE
ENG Willis R Smith DATE 2/26/73
PROJ ENG DATE 2-27-73
PROD DATE 2-28-73

DIGITAL EQUIPMENT CORPORATION MAYNARD MASSACHUSETTS

TITLE MULTIPLE UART CARD LINES Ø-7

NEXT HIGHER ASSY. B-DD-DH11-Ø
SCALE NONE
SHEET 4 OF 5
SIZE D CODE BS NUMBER DH11-Ø-8 REV. B
DIST.

REVISIONS REV CHANGE NO CHK
DEC FORM NO DRD 103-8

The drawing and specifications, herein, are the property of Digital Equipment Corporation and shall not be reproduced or copied or used in whole or in part as the basis for the manufacture or sale of items without written permission COPYRIGHT © 1973
DIGITAL EQUIPMENT CORPORATION

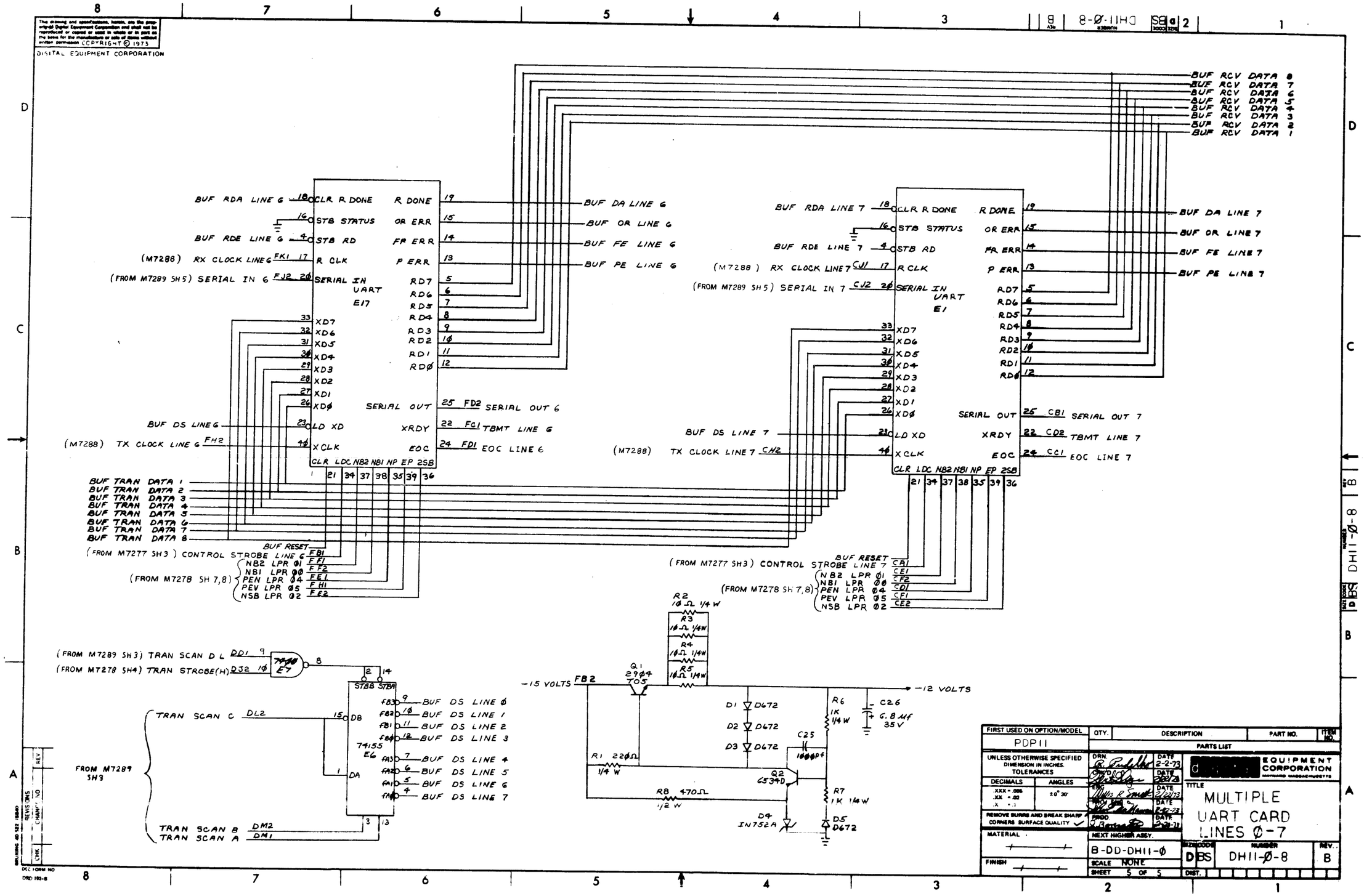

FIRST USED ON OPTION/MODEL	QTY.	DESCRIPTION	PART NO.	ITEM NO.
PDP11		PARTS LIST		

UNLESS OTHERWISE SPECIFIED DIMENSION IN INCHES. TOLERANCES

DECIMALS	ANGLES
.XXX = .005	±0° 30'
.XX = .02	
.X = .1	

REMOVE BURRS AND BREAK SHARP CORNERS SURFACE QUALITY ✓

MATERIAL

FINISH

DRN.	R. Prudhon	DATE 2-2-73
CHK'D		DATE
ENG	Willis R. Smith	DATE 2/22/73
MGR ENG		DATE 2-22-73
PROD		DATE 2-23-73

NEXT HIGHER ASSY. B-DD-DH11-Ø

SCALE NONE

SHEET 5 OF 5

EQUIPMENT CORPORATION MAYNARD MASSACHUSETTS

TITLE MULTIPLE UART CARD LINES Ø-7

SIZE	CODE	NUMBER	REV.
D	BS	DH11-Ø-8	B

DIST.

DEC FORM NO DRD 192-8

This drawing and specifications, herein, are the property of Digital Equipment Corporation and shall not be reproduced or copied or used in whole or in part as the basis for the manufacture or sale of items without written permission. COPYRIGHT © 1973
DIGITAL EQUIPMENT CORPORATION

NOTES:

NOTES:
1. ALL 19-10459 UART PINS 2 ARE -12 VOLTS.
2. ALL SIGNALS THAT BEGIN WITH TAG "BUF" ARE INTERNAL TO THE BOARD AND DO NOT GO TO EXTERNAL FINGERS.

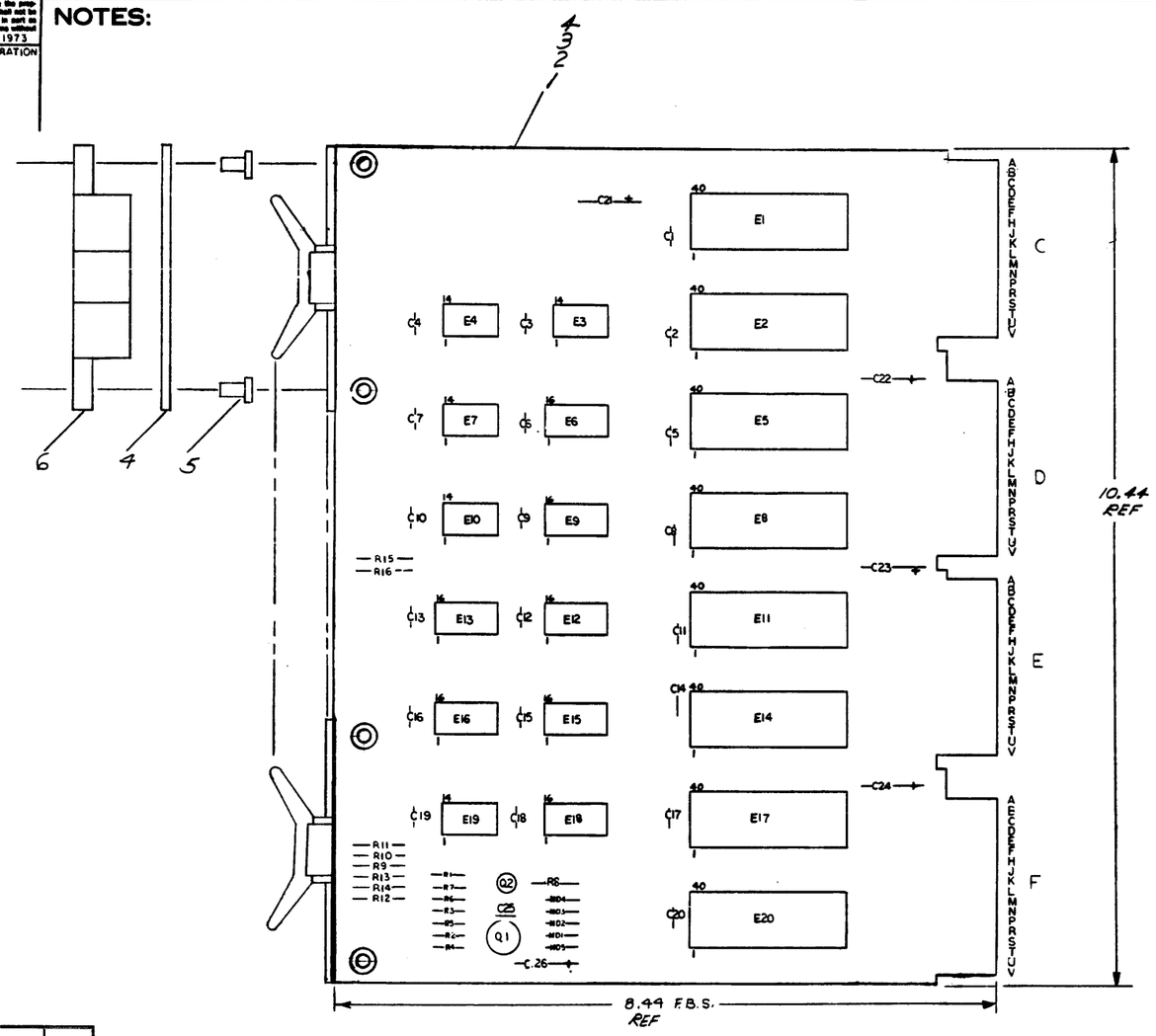

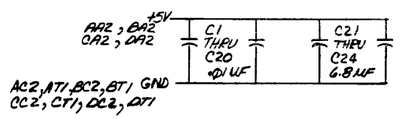

IC DEC 74155	8	16
IC UART	3	1
IC DEC 74151	8	16
IC TYPE	GND	+ 5V

GND AND 5V ARE USUALLY PIN 7 AND 14 RESPECTIVELY EXCEPTIONS ARE STATED ABOVE

IC PIN LOCATIONS

QTY	REF DESIGNATION	DESCRIPTION	PART NO.	ITEM NO.
1	C25	CAP 1000PF, 100V	1000042	24
8	R9 THRU R16	RES. 30K 1/4W 5%	1302394	23
5	C21 THRU C24, C26	CAP 6.8 UF 35V	1005306	22
20	C1 THRU C20	CAP .01UF, 50V, 20%	1001670	21
4	D1, D2, D3, D5	DIODE D672	1105275	20
1	D4	DIODE IN752A	1102808	19
4	R2 THRU R5	RES. 10, 1/4 W, 5%	1301317	18
2	R6, R7	RES. 1K, 1/4 W, 5%	1300365	17
1	R8	RES. 470, 1/2, 5%	1300315	16
1	R1	RES. 220, 1/4 W 5%	1300271	15
1	Q1	TRAN DEC 2904	1301742	14
1	Q2	TRAN DEC 6534D	1503409 00	13
3	E6, E7, E12	IC. DEC 74155	1910656	12
8	E11, E8, E5 E2, E1, E17, E14, E20	IC UART	1910459-01	11
2	E3, E4	IC. DEC 7408	1910155	10
4	E13, E18, E15, E16	IC. DEC 74151	1909936	9
2	E19, E10	IC. DEC 7404	1909686	8
1	E7	IC. DEC 7400	1905575	7
4		HANDLE (FLIP CHIP) MAGENTA	9008337-06	6
8		EYELET	9006732	5
1		ETCHED CIRCUIT BOARD	3010080	4
REF		MODULE ECO HISTORY	B-MH-M7280-06	3
REF		ASSY/DRILLING HOLE LAYOUT	D-AH-M7280-05	2
REF		X-Y COORDINATE HOLE LOCATION	K-CO-M7280-04	1

PARTS LIST

FIRST USED ON OPTION MODEL: PDP 11

ETCH BOARD REV: C

DEC NO.	EIA NO.	DEC NO.	EIA NO.
		DEC 6534D	1503409
		DEC 2904	2N 1132
		IN752A	— —
		D672	IN3653

SEMICONDUCTOR CONVERSION CHART

REV	CHANGE NO.	CHK	REVISIONS
B	DH11-00010	J. MCNAMARA	27 OCT 73
A	DH11 00002	J. MCNAMARA	1-12-73

DRN 2-14-73 · DSGN 2/26/73 · ENG 2/23/73 · MFG 2-26-73 · QA 2-23-73

NEXT HIGHER ASSY: B-DD-DH11-0

SCALE: NONE · SHEET 1 OF 5

DIGITAL EQUIPMENT CORPORATION, MAYNARD, MASSACHUSETTS

TITLE: MULTIPLE UART CARD LINES 8-15

SIZE D · CODE BS · NUMBER DH11-0-9 · REV. B

DIST.

DEC FORM NO. DRD-139A

COPYRIGHT © 1973
DIGITAL EQUIPMENT CORPORATION

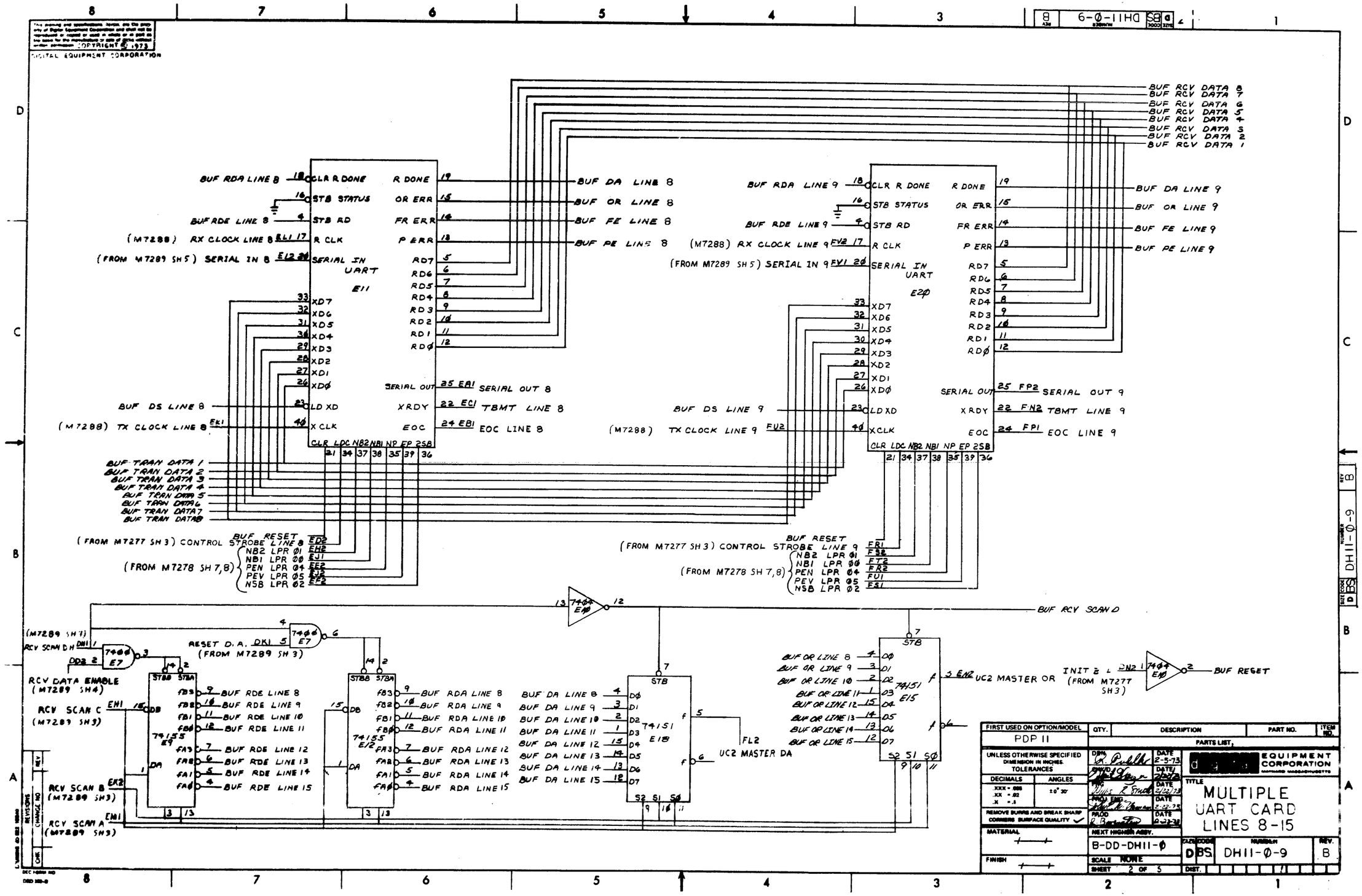

FIRST USED ON OPTION/MODEL	QTY.	DESCRIPTION	PART NO.	ITEM NO.
PDP 11		PARTS LIST		

UNLESS OTHERWISE SPECIFIED DIMENSION IN INCHES. TOLERANCES
DECIMALS .XXX = .005 .XX = .02 .X = .1
ANGLES ±0° 30'
REMOVE BURRS AND BREAK SHARP CORNERS SURFACE QUALITY ✓
MATERIAL —
FINISH —

DRN R. Pulk DATE 2-5-73
CHK'D DATE
ENG Denis E. Finch DATE 2/22/73
PROJ. ENG. DATE 2-22-73
PROD R. Bartosz DATE 2-23-73
NEXT HIGHER ASSY. B-DD-DH11-Ø
SCALE NONE
SHEET 2 OF 5

DIGITAL EQUIPMENT CORPORATION MAYNARD, MASSACHUSETTS

TITLE MULTIPLE UART CARD LINES 8-15

SIZE D CODE BS NUMBER DH11-Ø-9 REV. B

DIST.

REVISIONS: REV. CHANGE NO. DATE

This drawing and specifications, herein, are the property of Digital Equipment Corporation and shall not be reproduced or copied or used in whole or in part as the basis for the manufacture or sale of items without written permission. COPYRIGHT © 1973
DIGITAL EQUIPMENT CORPORATION

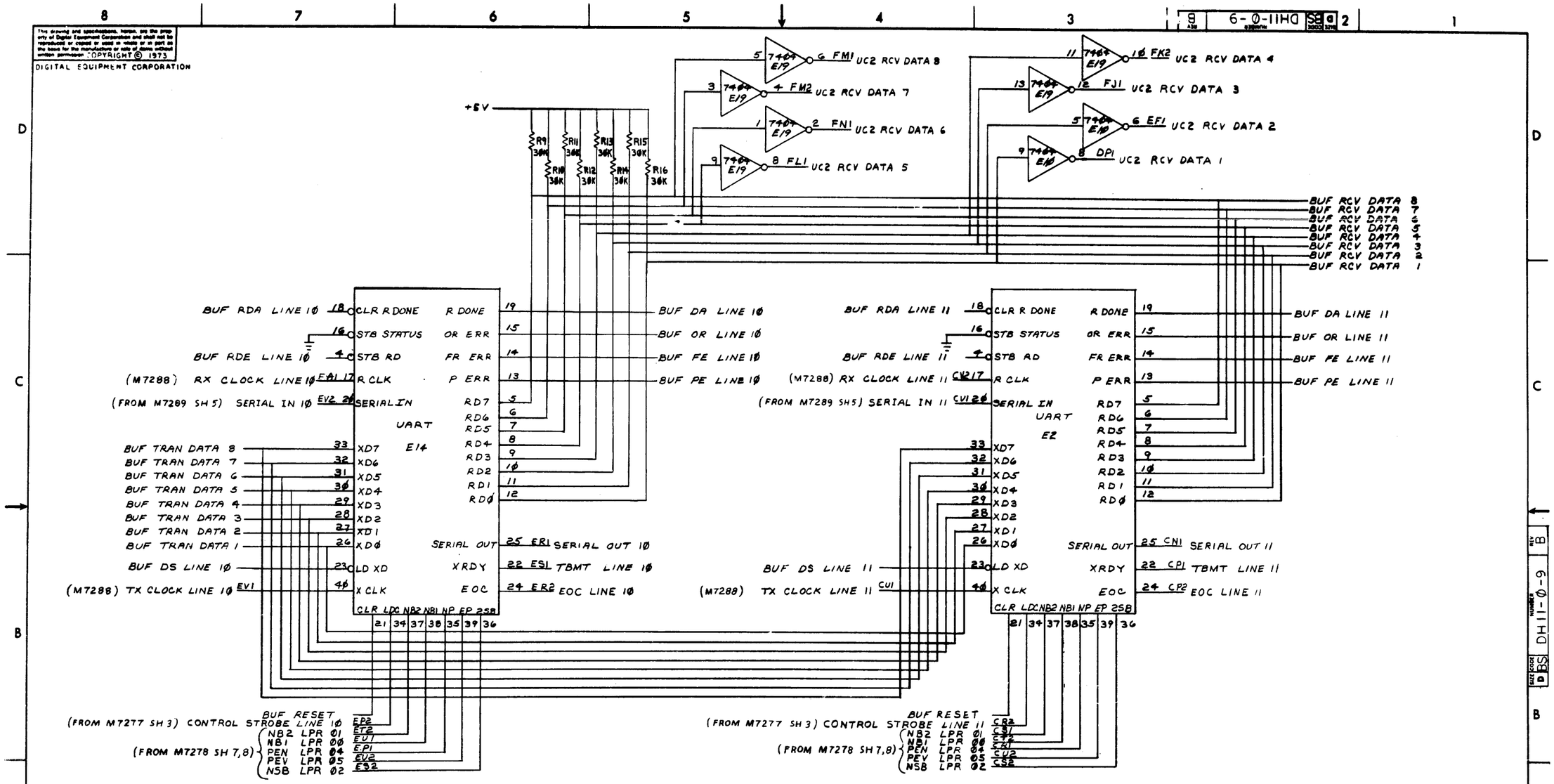

FIRST USED ON OPTION/MODEL	QTY.	DESCRIPTION	PART NO.	ITEM NO.
PDP 11		PARTS LIST		

UNLESS OTHERWISE SPECIFIED DIMENSION IN INCHES. TOLERANCES

DECIMALS	ANGLES
.XXX = .005 .XX = .02 .X = .1	±0° 30'

REMOVE BURRS AND BREAK SHARP CORNERS SURFACE QUALITY ✓

MATERIAL

FINISH

DRN. R. Riddle	DATE 2-5-73	digital EQUIPMENT CORPORATION MAYNARD MASSACHUSETTS
CHK'D	DATE 2/22/73	
ENG Willis R Smith	DATE 2/22/73	TITLE MULTIPLE UART CARD LINES 8-15
PROJ. ENG.	DATE 2-22-73	
PROD	DATE 2-23-73	

NEXT HIGHER ASSY. B-DD-DH11-0

SCALE NONE

SHEET 3 OF 5

SIZE	CODE	NUMBER	REV.
D	BS	DH11-0-9	B

DIST.

REVISIONS: REV / CHANGE NO / CHK

DRAWING 40-522 1980

DEC FORM NO ORD 102-B

This drawing and specifications, herein, are the property of Digital Equipment Corporation and shall not be reproduced or copied or used in whole or in part as the basis for the manufacture or sale of items without written permission. COPYRIGHT © 1973
DIGITAL EQUIPMENT CORPORATION

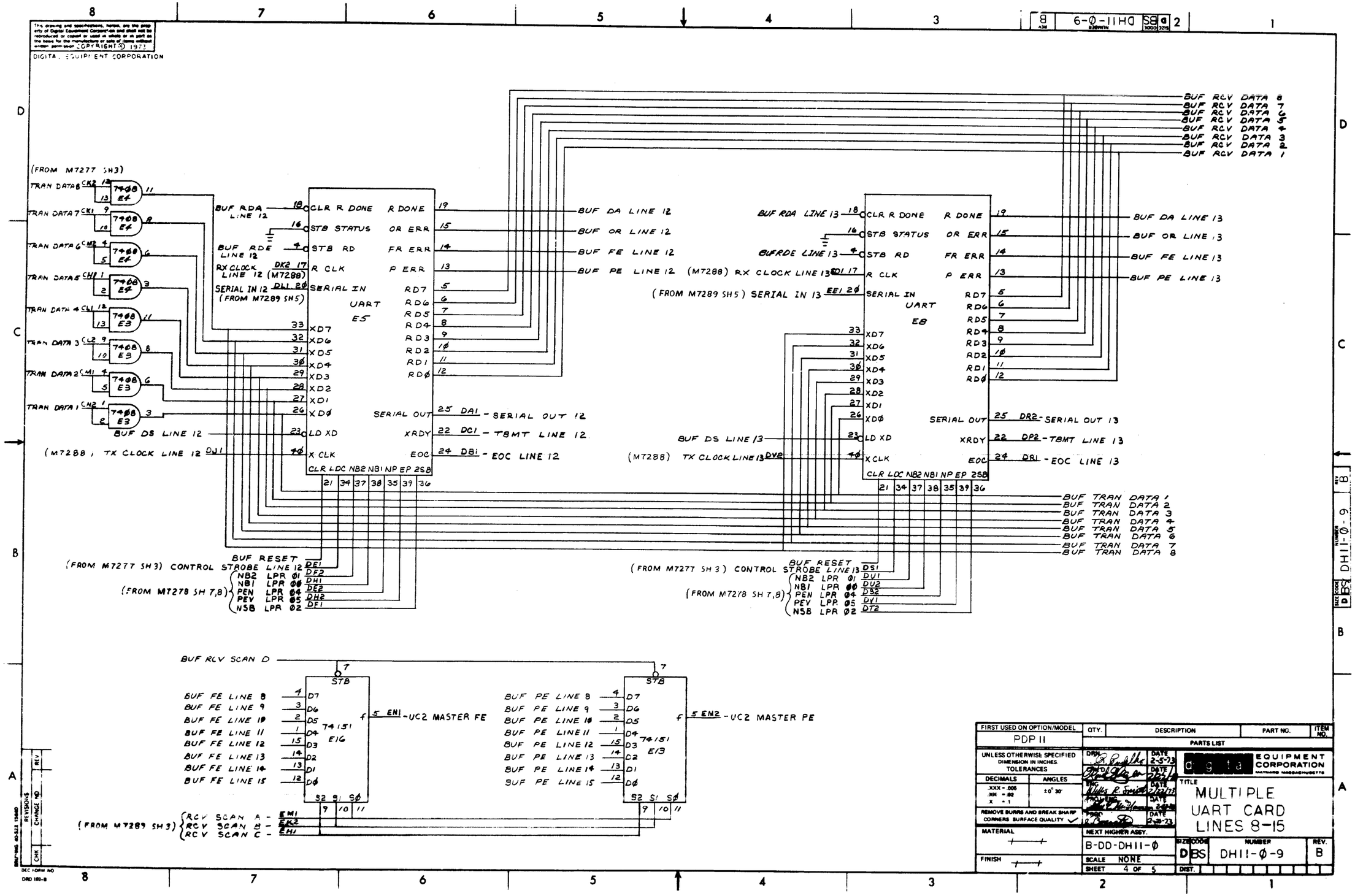

FIRST USED ON OPTION/MODEL	QTY.	DESCRIPTION	PART NO.	ITEM NO.
PDP 11		PARTS LIST		

UNLESS OTHERWISE SPECIFIED DIMENSION IN INCHES. TOLERANCES
DECIMALS: .XXX = .005, .XX = .02, .X = .1 — ANGLES: ±0° 30'
REMOVE BURRS AND BREAK SHARP CORNERS. SURFACE QUALITY ✓
MATERIAL
FINISH

DRN. DATE 2-5-73
DSGN. DATE 2-23-73
ENG. DATE 2-23-73
PROJ. ENG. DATE 2-23-73
PROD. DATE 2-23-73

EQUIPMENT CORPORATION MAYNARD MASSACHUSETTS

TITLE: MULTIPLE UART CARD LINES 8-15

NEXT HIGHER ASSY.: B-DD-DH11-0
SCALE: NONE
SHEET 4 OF 5

SIZE CODE: D BS | NUMBER: DH11-0-9 | REV. B
DIST.

REVISIONS — REV | CHANGE NO | CHK

DEC FORM NO DRD 102-B

This drawing and specifications, herein, are the property of Digital Equipment Corporation and shall not be reproduced or copied or used in whole or in part as the basis for the manufacture or sale of items without written permission. COPYRIGHT © 1973
DIGITAL EQUIPMENT CORPORATION

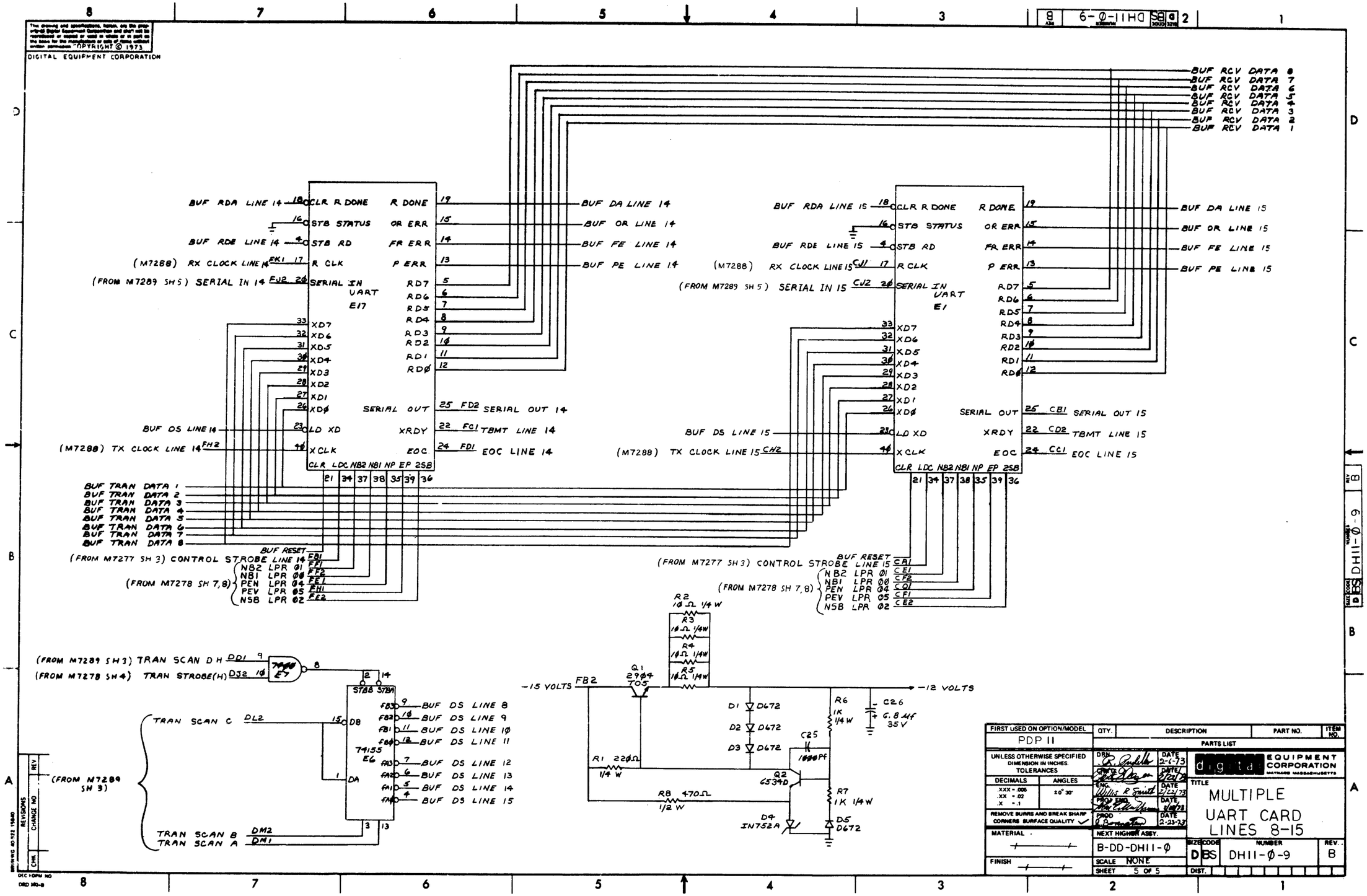

This drawing and specifications herein, are the property of Digital Equipment Corporation and shall not be reproduced or copied or used in whole or in part as the basis for the manufacture or sale of items without written permission.

DIGITAL EQUIPMENT CORPORATION
MAYNARD, MASSACHUSETTS

ENGINEERING SPECIFICATION

DATE February 5 1973

TITLE DH11 Multiplexor

REVISIONS

REV	DESCRIPTION	CHG NO	ORIG	DATE	APPD BY	DATE
A	CHANGE PER ECO	DH11-00002	MCNAMARA	6/73	J. McNamara	8-6-73
B	CHANGE PER ECO	DH11-00007	MCNAMARA	10/74	J. McNamara	11-5-74

ENG	APPD	SIZE	CODE	NUMBER	REV
		A	SP	DH11-0-5	B

General Description

The DH11 Multiplexor connects the PDP-11 with 16 asynchronous serial communications lines operating with individually programmable parameters. These parameters are:

Character length: 5,6,7, or 8 bit
Number of Stop Bits: 1 or 2 for 6,7,8 bit characters
1 or 1.5 for 5 bit characters
Parity generation and detection: Odd, Even, or None
Operating Mode: Half Duplex or Full Duplex
Transmitter Speed: 0,50,75,110,134.5,150,200,300,600, 1200, 1800,2400,4800,9600, Ext A, Ext B.
Receiver Speed: 0,50,75,110,134.5,150,200,300,600, 1200, 1800,2400,4800,9600, Ext A, Ext B.

Breaks may be detected or generated on each line.

The DH11 multiplexor uses 16 double-buffered MOS/LSI receivers to assemble the incoming characters. An automatic scanner takes each received character and the line number and deposits that information in a first-in, first-out buffer memory refered to as the "silo". The bottom of the "silo" is a register which is addressable from the Unibus.

The transmitter in the DH11 also uses double-buffered MOS/LSI units. They are loaded directly from message tables in the PDP-11 memory by means of single cycle direct memory transfers (NPR). The current addresses and byte counts for each line's message table are stored in semiconductor memories located in the DH11. This reduces the Unibus time taken for the NPR transfers to one NPR cycle per character transmitted. The NPR cycle used is lengthened slightly.

As many as 16 DH11's may be placed on a single PDP-11 processor, creating a total capacity of 256 lines.

1.0 Variations

1.1 The DH11 Multiplexor is available in five variations:

The DH11-AA consists of a double system unit, all modules necessary to implement a 16 line asynchronous multiplexor, a 5-1/4 inch level conversion and distribution panel with its own power supply,* and a data cable between the logic in the double system unit and the level conversion/distribution panel. The mdules for level conversion are not included, so that the type and quantity of lines may be customized to the customer's requirements.

The DH11-AB is the same as the DH11-AA, but does not include the level conversion/distribution panel or its associated power supply. Instead of a data cable to a distribution panel, a data cable to the DC08CS telegraph converter panel is supplied.

The DH11-AC is the same as the DH11-AA, except that the power supply on the level conversion/distribution panel is arranged for 240 volt, 50 Hertz operation. (there is no need for a 50 Hertz version of the DH11-AB because it is a processor-powered option).

The DH11-AA, -AB, and -AC include pre-wired slots in the double system unit for the insertion of the DM11-BB modem control.

The DH11-AD consists of a double system unit, all modules necessary to implement a 16 line asynchronous multiplexor, EIA level conversion for the data lines, modem control with EIA level conversion, and a 16 line EIA distribution panel.

The DH11-AE is the same as the DH11-AD except that the modem control modules are not included.

CAUTION: THE DH11 USES HEX MODULES AND THUS CANNOT BE MOUNTED IN A BA11 EXPANDER BOX. THE 11/35, 11/45 TYPE BOXES MUST BE USED.

*The power supply for the distribution panel is also 5-1/4" high. Generally, it can be mounted on the rear of the rack in a position opposite the distribution panel which is usually mounted on the front of the rack.

II. Multiplexor Control Section

2.1 The DH11 multiplexor control is located in a prewired double system unit. It contains NPR interface logic, interrupt logic, a clock card, transmitter and receiver scanners, etc.

2.2 The DH11 will operate under the following conditions:

Temperature: plus 50 to plus 110 degrees F.
Humidity: zero to 95% non condensing

2.3 The power consumption of the DH11-AA,AB and AC logic (excluding the level conversion modules, which run off the level conversion/distribution panel power supply) is:
Plus 5: 8.4 amperes (DH11 alone)*
11.2 amperes (DH11 plus DM11-BB Modem Control)*
Plus 15: None
Minus 15: 240 milliamperes

2.4 The power consumption of the DH11-AD and AE logic.

DH11-AD

Plus 5: 10.8 amperes*
Plus 15: 400 milliamperes
Minus 15: 645 milliamperes

DH11-AE

Plus 5: 8.6 amperes*
Plus 15: 100 milliamperes
Minus 15: 340 milliamperes

2.5 The DH11 receiver units provide serial to parallel conversion of 5,6,7, or 8 bit code with one start bit and at least one stop bit. An extra data bit is added when parity operation is selected. The allowable input distortion is 43.75%, assuming no speed distortion. The maximum allowable speed distortion is 4.8% for 8 bit characters.

2.6 The DH11 transmitters provide parallel to serial conversion of 5,6,7 or 8 bit code with one start bit and one, one and a half (5 bit only), or two (6,7, or 8 bit only) stop units. An extra data bit is added if parity operation is selected. The number of bits per character, the number of stop marks, and parity mode are selectable on a per-line basis, but must be the same as the

* Add .2 amperes if this is the last option on the Unibus. (The Unibus terminator consumes .2 amperes.)

2.6 Continued

corresponding receiver. The serial data rate is determined by a crystal clock and is program controllable on a per-line basis. The transmitter speeds may be program controlled independently of the receiver speeds. Output distortion is less than 2%.

2.7 Interface to and from the control section:

Outputs: There are 16 data lines at TTL levels using negative logic (mark=Ø).

Inputs: There are 16 data lines at TTL levels using negative logic (mark=Ø).

The input leads from the level conversion/distribution panel are equipped with pull up resistors which place lines not equipped with level conversion in a permanently SPACING condition. Logic in the DH11 receivers prevents this condition from assembling null characters on a continuous basis, however.

For the DH11-AD and AE options, EIA level conversion is provided for the 16 input and output TTL data lines.

2.8 Bus Load: The DH11 presents two bus loads to the Unibus. If a DM11-BB modem control is added, that will be an additional bus load. The DH11-AD is three bus loads.

2.9 Interrupts

2.9.1. There are two kinds of receiver interrupts; both are enabled by bit 6 of the System Control Register.

2.9.1.1 Receiver Interrupt (System Control Register, bit 7)

This interrupt, when enabled, occurs whenever the number of entries in the silo exceeds the "silo status alarm level" that the program has stored in the low byte of the Silo Status Register. (The program can examine that actual silo fill at any time by examining the high byte of the Silo Status Register.)

2.9.1.2 Storage Overflow Interrupt (System Control, bit 14)

This interrupt, when enabled, occurs whenever the character storage silo is full and the DH11 hardware has a need to store an additional character there. Should this situation occur, this does not necessarily mean that data has been lost. The reader is referred to Section 5.9. "Programming-Discussion"

2.9.2 There are two kinds of transmitter interrupt; both are enable by bit 13 of the System Control Register.

2.9.2.1 Transmitter Interrupt (System Control, bit 15)

This interrupt, if enabled, occurs whenever one or more lines have finished the transmission of a complete string of characters. Specifically, it occurs after the NPR cycle that loaded the last character to be transmitted (and hence incremented the byte count to zero).

2.9.2.2 Non-Existant Memory Interrupt (System Control, Bit 1Ø)

This interrupt, when enabled, occurs whenever the DH11 addresses non-existant memory. Specifically, this interrupt occurs if the DH11 enters an NPR cycle, places an address on the Unibus and fails to receive a slave sync response for the location addressed within 20 microseconds.

3.0 Description of the Hardware

3.1 Receiver Hardware

Reception on each line is by means of Universal Asynchronous Receiver/Transmitters (UARTS). These are 40 pin MOS/LSI chips which perform all the necessary functions for double buffered asynchronous character assembly.

The receiver section of the UART samples the line at 16 times the bit rate of the signals to be received on that line. Upon detection of a MARK to SPACE transition, the UART counts 8 clock pulses and checks the state of the line again. This sampling will occur in the center of a normal start bit.

3.1 Receiver Hardware (Continued)

If that sample is a MARK, the receiver returns to its idling state, ready to detect another MARK to SPACE transition. If the sample was a SPACE, the receiver enters the data entry condition and samples the state of the line at subsequent sample points spaced 16 clock ticks from the center of the start bit. The number of samples taken is determined by the "character length" information entered into the UART via the Line Parameter Register. If parity checking has been enabled for this line, the receiver computes the parity of the character just received and compares it with the parity sense specified for reception on that line. If the parity sense differs, the parity error bit will be set.

The character length, parity sense, number of stop bits, etc. that will be used by the UART to perform the above operations are stored within each UART in a control bits holding register. The control bits holding registers of each UART are addressable, on a write only basis, from the Unibus, by first setting the "Line selection bits" of the System Control Register and then loading the desired line parameters into the Line Parameter Register, from which they will automatically be transferred to the control bits holding register of the designated UART. It is important that no interrupt handling routine intervene and change the contents of the System Control Register during the above operation.

3.2 The Silo

The silo is an MOS/LSI digital storage buffer that is 16 bits wide and 64 words deep. A 16 bit word is entered at the "top", from which it automatically bubbles down to the "lowest" location that does not already contain an entry. The "bottom" of the silo is the Next Received Character Register.

There are three "registers" associated with the silo. One of these is the Next Received Character Register. The Next Received Character Register is a read-once register because it is, in fact, the bottom of the silo and reading it extracts that character from the silo and causes all other entries to bubble down one more position.

The other two registers are byte-size registers and are contained within the Silo Status Register. One of them, the high byte, is read-only and contains the status of an up-down counter giving the actual fill level of the silo. The second register, in the low byte, is read/write and is used by the program to specify that silo fill level beyond which the program wishes to receive interrupt notification. The details of these registers are explored some more in Section 5.9 (Programming - Discussion) under the heading "Silo".

3.3 Received Character Distortion

Received characters may contain up to 43.75% distortion on any bit, due to the 16 times clock rate sampling. However, the overall bit rate must be accurate. Specifically, errors in bit rate are cumulative such that when the receiver samples the stop bit to see if it is there (if not, it's a "framing error") the error accumulated by that time must not exceed 43.75% of a bit time. The accumulated error (called "gross start-stop distortion") is calculated as (clock error x (number of data bits plus one) plus bias distortion of the final character). Assuming the reception of eight data bits, or seven data bits plus parity, 4.8% speed distortion would be permissable. Speed distortion (clock error, bit rate error) of any amount poses severe problems in an echo situation, however. Specifically, if a terminal sends to the DH11 at a slightly fast rate and the DH11 sends the exact same characters back to the terminal at the correct rate, the DH11 silo will eventually fill with un-echoed characters. This problem would not occur with keyboard terminals, but high speed tape senders should have their transmission speeds carefully checked before use with the DH11 or any other asynchronous communications interface made by any

3.3 Continued-

company. In computing speeds, one may assume the DH11 receiver clock to be accurate within at least .05%.

3.4 Transmitter Hardware

Transmission on each line is by means of Universal Asynchronous Receiver/Transmitters (UARTs). These are 40 pin MOS/LSI chips which perform all the necessary functions for double buffered asynchronous character transmission. The transmitter section of the UART holds the serial output line at a MARKING state when idle. When the transmitter loading leads have been conditioned with the character to be transmitted and the data strobe lead has been brought high (these functions are performed by the NPR control), the UART will commence generation of a start space within one sixteenth of a bit time. The start space and all subsequent data bits are a full bit time each. The start space is followed by M data bits, where M is 5,6,7, or 8 as determined by the control bits holding register. (See the description of the receiver hardware for a description of the UART control bits holding registers and how they are loaded from the Line Parameter Register). The data bits are presented to the line least significant bit first. The parity bit, if parity generation is enabled, is calculated by the transmitter and affixed after the last data bit, but before the stop marks.

The stop bit or bits depend in quantity upon the setting of the control word. If the transmission of 6,7, or 8 bits has been selected, the program may select either one or two stop bits. If the transmission of 5 bit code has been selected, the program may select either one or one and a half stop bits.

If the transmitter's holding register has been loaded while a character was being transmitted, that second character will have its start bit commence immediately at the end of the preceding character's stop bit(s).

3.5 The Auto-Echo Feature

The DH11 contains provision for the hardware to echo received characters without software intervention. The feature may be enabled on any line by conditioning the line selection bits in the System Control Register and then setting the appropriate bits in the Line Parameter Register, including bit 15, Auto Echo Enable.

3.5 Continued-

The auto-echo hardware is part of the receiver scanner and operates as follows:

1) If the receiver scanner finds a received character for a line upon which auto-echo is NOT enabled, it simply dumps that character into the silo and resumes scanning.

2) If the receiver scanner finds a received character for a line upon which auto-echo IS enabled, it examines the error flags associated with that character-

   a) If a framing error is detected, this means that the remote terminal is trying to gain the attention of the processor by sending a "break". In this case, the auto-echo hardware dumps the received character and associated flag into the silo so that the system software will be alerted. The break is not echoed to the remote terminal.

   b) If an overrun error is detected, this means that the remote terminal is trying to gain the attention of the processor by typing characters. This case is treated identically to 2a, above.

3) If the receiver scanner finds a received character for a line (actually I should say "from a line") upon which auto-echo is enabled and there are no error flags of the type mentioned above, the receiver scanner and auto-echo logic will attempt to echo the character. First, however, certain tests of internal logic conditions must be made.

   a) The UART transmitters are all loaded from a common internal data bus. Therefore, the auto-echo hardware must first check to see that no NPR cycles are in progress loading a UART transmitter from that bus. If a conflict is indicated, the receiver scanner is restarted and the process will be tried again on the scanner's next rotation.

   b) If the above test indicates no problem, the one remaining check is to see if the transmitter holding register for the line upon which the character was received is available. If it is not, the scanner is restarted. If it is available, auto-echo commences.

One should note that it is not advisable to try to transmit messages on a line and auto-echo characters received on that line simultaneously. This is not unreasonable, as you plainly

4.0 Multiplexor Distribution Panel and Power Supply

4.1 The DH11 provides a panel for level converters and cables for the individual lines. The panel uses a standard H911 style rack, but only 6 connector blocks are used. A Layout of the distribution panel and the various slot assignments is shown in the option bulletin and in the manual.

Note that the slot assignments follow the DF11 (Standard level conversion and cable slot for PDP-11 Communications Products) format. Slots A06 through A21 are used for level conversion modules. Slots B06 through B21 are used for cable termination. Other slots provide inputs or special purpose outputs. The distribution panel mounts on a standard 19 inch cabinet and connects to the DH11 logic by means of a BC08-S data cable.

4.2 Power for the distribution panel is provided by the H758* power supply mounted on the rear of the cabinet. The H758 provides the voltages listed below:

+15 volts @ 2 amperes
-15 volts @ 2 amperes
+ 5 volts @ 4 amperes

Power drain of the distribution panel depends upon the type of level conversion used. The maximum draw on the +15 and -15 occurs when DF11-BB modems are used, at which time the full rated output of 2 amperes is used. The maximum +5 draw occurs when all lines are arranged for full modem control (4 DM11-DC options) - the current used is then 1.7 amperes.

Note that the level conversion types can be mixed on a 4 line basis, by using different converters on slots A4, A5, B4, and B5. Also level converters can be mixed on a single line basis by using slot A6 through A21 for level conversion on a single line basis. Consult the module utilization diagram for the distribution panel for specific details.

4.3 The DH11-AD and AE options use a 16 line EIA distribution panel. This panel requires no power of its own. It mounts on a standard 19 inch cabinet and connects to the DH11 logic by means of two BC08S data cables and four BC08R modem control cables.

*Some units in the field may be observed with H739 or H751 supplies. These are generally equivalent to an H758 supply.

3.5 Continued-

cannot receive characters on a line at 30 characters per second, echo them back by auto-echo at 30 characters per second, and transmit an independent message at 30 characters per second, all on the same line. The auto-echo hardware will interlock these functions to some degree, but if more than two characters are received on a line while the scanner is waiting for the transmitter holding buffer to become available (see 3b above), a data overrun will occur and characters will be lost. In short, auto-echo and software-driven transmission should not be attempted on the same line simultaneously if input from that line is expected.

5.0 Programming

5.1 The System Control Register - ØØ

The System Control Register is a byte-adressable register. The bit assignment is as follows:

ØØ, Ø1, Ø2, Ø3 Line Selection

Each of the 16 lines served by the DH11 has its own storage for line parameter information, current address, and byte count. These storage locations are loaded by the program via the Line Parameter Register, Current Address Register, and Byte Count Register, but the hardware must first be told which line is to have its line parameters, current address, or byte count changed. This routing is accomplished by setting the Line Selection bits. These bits are read/write.

Ø4, Ø5 Memory Extension

The information stored in these bits becomes bits 16 and 17 respectively of any current address loaded by the program into the Current Address Register. These bits are read/write, but when read represent only the status of bits 4 and 5 of the System Control Register, NOT the status of the 16th and 17th address bits of the selected line. See the Silo Status Register for further information. The reason for this arrangement is to permit interrupt service routines to save the contents of the System Control Register accurately.

Ø6 Receiver Interrupt Enable

This bit, when set, enables receiver interrupts (bit 7).

Ø7 Receiver Interrupt

This bit, when set, indicates that the number of characters stored in the silo exceeds the "alarm level" specified by the low byte of the Silo Status Register. This bit is read only, except in Maintenance Mode, when it is read/write. The setting of this bit will generate an interrupt if bit Ø6 (above) is also set.

5.1 Continued-

Ø8 Clear Non-Existant Memory Interrupt

This bit, when set, clears the non-existant memory interrupt flip-flop (bit 1Ø) and clears itself. This bit is read/write.

Ø9 Maintenance (Read/Write)

This bit, when set, places the DH11 in Maintenance mode. Maintenance mode is described in Section 5.11.

1Ø Non-existant Memory

This bit is set whenever the NPR hardware within the DH11 addresses a memory location from which no slave sync is received within 20 microseconds. This indicates that the addressed location or device does not exist. This bit causes an interrupt if set while bit 13 (see below) is set. This bit is read only, unless in maintenance mode, at which time it is read/write.

11 Master Clear

This bit, when set, generates "Initialize" within the DH11, clearing the silo, the UARTs, and the registers. The exact bits cleared are discussed in Section 5.10 Initialize. This bit is read/write.

12 Storage Interrupt Enable

This bit, when set, permits the setting of bit 14 to generate an interrupt. This bit is read/write.

13 Transmit and Non-Ex-Mem Interrupt Enable

This bit, when set, permits the setting of bit 1Ø or 15 to generate an interrupt. This bit is read/write.

14 Storage Interrupt

This bit is set whenever the receiver scanner has found a receiver holding buffer with a character in it and desires to store that character in the silo but cannot do so at this time

5.2 Continued-

reader is referred to Section 5.9 for further details on double-buffered reception.

15 Valid Data Present

This bit indicates that the data presented in bits 14-ØØ is valid. This bit permits the use of a character handling program that takes characters from the silo until there are no more available. This is done by reading this register and checking bit 15 until one obtains a word for which bit 15 is zero.

The entire Next Received Character Register is read-only and is addressable only on a word basis.

5.3 Line Parameter Register Ø4

This register should be loaded only after the System Control Register has had its line selection bits arranged to select the line to which these line parameters are to apply.

This register is write-only.

ØØ - Ø1 Character Length

These bits should be set as shown to receive and transmit characters of the length (excluding parity) shown:

Ø1	ØØ	
Ø	Ø	5 bit
Ø	1	6 bit
1	Ø	7 bit
1	1	8 bit

Ø2 Two Stop Bits

This bit, when set, conditions a line transmitting with 6,7, or 8 bit code to transmit characters having two stop marks. If the line is transmitting 5 bit code, assertion of this bit causes the characters to be transmitted wi n 1.5 stop marks. if this bit is not asserted, 1 stop mark is sent.

5.1 Continued-

because of a lack of space. This bit when set will cause an interrupt if bit 12 is set. This bit is read only, except in Maintenance Mode, at which time it is read/write.

15 Transmitter Interrupt

This bit is set whenever the DH11 concludes an NPR cycle that incremented a byte count to zero, indicating the loading of the last character in a message buffer into a UART transmitter holding register. This bit when setwill cause an interrupt if bit 13 is set. This bit is read/write. (It is set during an NPR cycle)

5.2 Next Received Character Register Ø2

ØØ - Ø7 These bits contain the next received character, right justified. The least signifigant bit is in bit ØØ. Unused bits are Ø. The parity bit is not shown.

Ø8 - 11 These bits contain the line number upon which the aforementioned character was received. Bit 8 is the least signifigant.

12 Parity Error

This bit is set if the sense of the parity of the received character does not agree with that designated for that line.

13 Framing Error

This bit is set if the received character did not have a stop bit present at the proper time. This bit is usually interperted as indicating the reception of a "break".

14 Data Overrun

This bit is set if the received character was preceded by a character that was lost due to the inablility of the receiver scanner to service the UART receiver holding buffer. The

5.3 Continued-

Ø3 Reserved (Not used)

Ø4 Parity Enabled

If this bit is set, characters transmitted on this line will have an appropriate parity bit affixed and characters received on this line will be have their parity checked.

Ø5 Even Parity

If this bit is set and bit 4 is set, characters of even parity will be generated on this line and incoming characters will be expected to have even parity. If this bit is not set, but bit 4 is set, characters of odd parity will be generated on this line and incoming characters will be expected to have odd parity. If bit 4 is not set, the setting of this bit is immaterial.

Ø6 - Ø9 Receiver Speed

The state of these bits determines the operating speed for this line's receiver. The speed table below is applicable.

1Ø - 13 Transmitter Speed

The state of these bits determines the operating speed for this line's transmitter. The speed table below is applicable.

Speed Table for Receiver and Transmitter Speeds:

Bit	9 / 13	8 / 12	7 / 11	6 / 1Ø	
	Ø	Ø	Ø	Ø	Zero Baud (See 5.9)
	0	0	0	1	50 baud
	0	0	1	0	75 baud
	0	0	1	1	110 baud
	0	1	0	0	134.5 baud
	0	1	0	1	150 baud
	0	1	1	0	200 baud
	0	1	1	1	300 baud

5.3 Continued-

Speed Table for Receiver and Transmitter Speeds (Continued):

Bit	9 / 13	8 / 12	7 / 11	6 / 1Ø	
	1	Ø	Ø	Ø	600 baud
	1	Ø	Ø	1	1200 baud
	1	Ø	1	Ø	1800 baud
	1	Ø	1	1	2400 baud
	1	1	Ø	Ø	4800 baud
	1	1	Ø	1	9600 baud
	1	1	1	Ø	External Input A
	1	1	1	1	External Input B

14 Half-Duplex/Full-Duplex

If this bit is set, this line is conditioned to operate in half-duplex mode. If this bit is clear, this line is conditioned to operate in full-duplex mode.

In this application "half-duplex" means that the DH11 receiver is blinded during transmission of a character.

15 Auto-Echo Enable

When this bit is set, characters received on this line will be hardware echoed. See Section 3.5 for further details.

5.4 Current Address Register Ø6

This register should be loaded only after the System Control Register has had the appropriate bits set to select the line number to which this current address is to apply. When this register is loaded, address bits ØØ-15 are transferred into semiconductor memories in the DH11 from bits ØØ-15 respectively of this register. Address bits 16-17 are transferred into semiconductor memories in the DH11 from bits 4-5 of the System Control Register.

When this register is read, it will indicate the current address of the line selected by the System Control Register. Bits 16 and 17 will appear in the Silo Status Register.

5.5 Byte Count Register 1Ø

In the same fashion as the Line Parameter and Current Address registers, this register should not be loaded or read without first selecting a line number by means of the lower-order four bits of the System Control Register. This register should be loaded with the two's complement* of the number of characters (bytes) to be transmitted on that line. The byte count register is read/write.

5.6 Buffer Active Register 12

This register contains one bit for each line. The bits are to be individually set using BIS instructions. Setting a bit initiates transmission on the associated line. The bit is cleared by the hardware when the last character to be transmitted on that line is loaded into the transmitter data holding register of the UART for that line. It should be noted that while the clearing of a BAR bit does indicate that a new message may be sent, it does not indicate that the last characters from the preceding message have been completely sent. Specifically, two more characters will be sent after the BAR bit clears. These are the last two characters of the message; one of them was just starting when the BAR was cleared and one was that final character that was loaded into the holding register, thus clearing the BAR bit. Thiseffect is a normal consequence of double-buffered transmission and is mentioned here for the benefit of programmers who want to write programs that control such modem leads as Request to Send. Clearly, Request to Send should not be dropped until at least two character times after the BAR bit for a given line clears.

Clearing a BAR bit should not be used to abort transmission on a line. Rather, the byte count for that line should be set to zero. The Buffer Active Register (BAR) bits are read/write.

5.7 Break Control Register 14

This register contains one bit for each line. Setting a bit in this register will immediately generate a break condition on the line corresponding to that bit number. Clearing the bit will terminate the break condition. The break condition may be timed by sending characters during the break interval, since these characters will never actually reach the line. Further comments concerning the transmission of break signals may be found in Section 5.9

*To determine the two's complement, write the number out in binary, complement each bit to obtain the "complement" and then add 1 to get "two's complement".

5.8 Silo Status Register 16

This register is actually two byte-sized registers. The bit assignments are:

ØØ - Ø5 Silo Alarm Level

The program writes a number 0,1,2,4,8,16,or 32 into this location. When the number of characters stored in the silo exceeds that number, an interrupt (System Control Register bit 7)is generated, if enabled (System Control Register bit 6 is 1). These bits are read/write.

Ø6 - Ø7 Read Extended Memory

These bits are read only and contain the A16 and A17 bits of the current address for the line to which the line selection bits of the System Control Register are pointing.

Ø8 - 13 Silo Fill Level

These bits represent an up-down counter that indicates the actial number of characters in the silo. It should be noted that there are six binary digits; hence numbers between 0 and 63_{10} can be represented. A full silo has 64_{10} entries and appears as ØØØØØ, but one may easily tell the difference between an empty silo (ØØØØØ) and a full silo (ØØØØØ) by checking the Storage Overflow bit (bit 14 of System Control). These bits are read-only.

14 Reserved (Not used; this bit is read/write).

15 Silo Maintenance (See Section 5.11)

5.9 Programming - Discussion

Double Buffered Receivers - General

"Double-buffered" receivers contain two registers, one of which is a shift register into which the character being received from the communications line is shifted a bit at a time. The second register is a holding register; when the shift register has assembled a complete character, that character is transferred in a parallel fashion into the holding register. At that time a flag is set and the hardware or software of the system using the double-buffered receiver can access the holding register and remove/copy the data stored there. When the shift register has assembled another character, that character will be transferred into the holding register, obliterating the character previously stored there. If this action takes place before the data in the holding register has been accessed by the aforementioned hardware/software, a "data overrun" flag will be set, indicating that data was lost.

Double Buffered Receivers - DH11

The Universal Asynchronous Receiver Transmitters (UARTs) used in the DH11 are MOS/LSI units that each contain a double buffered receiver and a double buffered transmitter. The double buffered receivers found in DH11 UARTs function exactly as described above. In the DH11, the flags indicating presence of data in the holding registers of the double-buffered UART receivers are scanned by an automatic hardware scanner which copies data from holding registers into the "silo" if and only if storage space is available in the silo. If that space is not available, and the scanner finds a flag indicating a holding register with data in it, the "Storage Overflow" bit (System Control Register, bit 14) is set, and an interrupt is generated, if enabled. As indicated in Section 2.9.1.2, the setting of this bit does not necessarily mean that data has been lost. Rather, it idicates that data will be lost if the hardware scanner is unable to service (i.e. dump into the silo) the data in one or more holding registers before before additional characters arrive on those lines. Actual data loss will become evident to the program when characters are received with the "Data Overrun" bit set. (See the description of the "Next Received Character Register".)

5.9 Continued-

Silo

The silo, actually more similar in design to a grainery, is a first-in first-out buffer store. A parallel - loaded 16 bit word (see Next Received Character Register for the format) automatically propagates "downward" into the first location not already containing a word. In the case where the silo is empty, this means that the word would propagate directly into the Next Received Character Register. The propagation time from the top of the silo to the bottom may be as much as 32 microseconds. For this reason, the hardware is arranged such that the Receiver Interrupt is not generated until the number of characters in the silo exceeds the "silo alarm level" AND there is at least one character in the bottom of the silo. This arrangement is necessary because the up-down counter that indicates the number of characters in the silo indicates exactly that, the number of characters in the silo, both those resting in the bottom and those propagating downward. While the hardware arrangement protects the case where the silo is empty and the alarm level is zero (if the "AND there is at least one character in the bottom of the silo" was not made a condition in the interrupt generation, the program would receive an interrupt while the single character in the silo was propagating downward), the fact still remains that the number of characters IN the silo and the number actually available to be serviced may differ due to the propagation time. For this reason, character handling programs should not assume there are some particular number of characters in the silo when servicing begins. Rather, the program should extract a character, check the "valid data present" bit (bit 15) and handle the character; then the program should extract the next character and repeat the process until bit 15 no longer tests as "1". At that time, the silo may be assumed to be empty (although there may be another character propagating downward) and the character handling routine may be terminated until another Receiver Interrupt is received.

On very fast processors, such as the PDP-11/45, the program should avoid reading the Next Received Character Register more often than once per microsecond, as it takes one microsecond for characters in the silo to shift downward one position. Since the typical program will be checking bit 15 and moving the character to some location, it is anticipated that this speed requirement will not pose a problem.

5.10 Addresses and Vectors

The DH11 uses floating addresses and is located after DJ11's in the floating address space that begins at location 160010. Because the DH11 has eight registers, it must be assigned an address that is a multiple of 20 (octal). All DH11's in a system should have consequtive addresses.

Example #1: A system with no DJ11's, but two DH11's:

160010 Cannot use for DH11's because not multiple of 20.
160020 First DH11
160040 Second DH11
160060 DH11 Gap (Indicates that there are no more DH11's).

Example #2: A system with one DJ11, two DH11's:

160010 First DJ11
160020 DJ11 Gap (Indicates that there are no more DJ11's).
160030 Cannot use for DH11's because not multiple of 20.
160040 First DH11
160060 Second DH11
160100 DH11 Gap (Indicates that there are no more DH11's).

The DH11 vectors (2) follow those of the DJ11 in the floating vector space that starts at address 300. The vectors starting at 300 are used in the following order: DC11; KL11/DL11-A,B; DP11; DM11-A; DN11; DM11-BB; DR11-A; DR11-C; PA611 Readers; PA611 Punches; DT11; DX11; DL11-C,D,E; DJ11; DH11.

Of the two DH11 vectors, the receiver vector is the lower numbered vector. The priority of the receiver and transmitter interrupts are individually selectable by means of two standard PDP11 priority jumper plugs.

INITIALIZE

The Initialize signal clears the Silo, the UARTs, and all registers except the Current Addresses and Byte Counts. All scanners are forced to line ØØ but continue operation from there.

5.9 Continued-

Zero Baud

A speed selection of "zero baud" is provided so that the program may turn off any line. This would be useful should excessive circuit noise on an unused line cause the receipt of annoying quantities of bogus characters.

BREAK Signals

When the Break Control Register has been conditioned to transmit a break signal on a particular line, DH11 logic immediately forces the output on that line to the SPACE (Ø) condition.

As indicated in Section 5.6, the generation of a Transmitter Interrupt occurs when the last character of a message has been loaded into a UART transmitter from a message table in PDP-11 core. It is thus appropriate at that time for the program to set up a new message in core and to load the appropriate current address and byte count so that the new message can begin when the old one is finished.

It is important to note that the **former** message is not "finished' when the Transmitter Interrupt is given. Rather, the use of the core table is finished. In terms of the actual serial communications line, there are two more characters left to go. One of these characters is in the UART transmitter's shift register; the other is in the UART transmitter's holding register.

The consequence of the above is that to send a break signal, one should load two nulls and wait for a transmitter interrupt before setting the appropriate bit in the Break Control Register. In this way, generation of a break will not interrupt the transmission of any printing characters. In like manner, when using characters to time the transmission of a break signal, nulls should be used so that when the break condition is terminated by clearing the bit in the Break Control Register, **no** printing characters will be produced from the UART shift and holding registers.

5.10 Maintenance Bits and Their Function

Setting of SCR Ø9 (Maintenance) does the following:

1) It enables the ability of the program to write SCR Ø7 (Receiver Interrupt), SCR 1Ø (Non-Existant Memory Interrupt), and SCR 14 (Storage Overflow Interrupt) bits. This write capability is normally not enabled as it can produce hardware/software synchronization problems unless carefully done.

2) It loops the transmitted data leads (serial out line ØØ-15) to the received data leads (serial in line ØØ -15).

Setting of SSR 15 (Silo Maintenance) causes the inputs of the silo to be set to a 1010101010101010 bit pattern, and a single 16-bit character made up of this pattern to be loaded into the silo. Successive clears and sets of SSR 15 will repeat this procedure. All receiver speeds should be set to zero baud and the silo emptied before this is done, so that no data from the incoming serial lines will be placed in the silo while it is under test.

This drawing and specifications, herein, are the property of Digital Equipment Corporation and shall not be reproduced or copied or used in whole or in part as the basis for the manufacture or sale of items without written permission. COPYRIGHT © 1972

DIGITAL EQUIPMENT CORPORATION

FIRST USED ON OPTION MODEL	QTY.	DESCRIPTION	PART NO.	ITEM NO.
PDP 11		PARTS LIST		

REVISIONS			
CHK	CHANGE NO.	REV.	
	DH11-00005	A	
	MCNAMARA		
	DH11-00008	B	12-19-74
	MCNAMARA		
	DH11-00011	C	19 JULY 76
	J. MCNAMARA		7-29-76

DRN.	DATE 1-4-73	digital EQUIPMENT CORPORATION MAYNARD, MASSACHUSETTS
CHK'D.	DATE 1-4-73	TITLE
ENG.	DATE	WIRE LIST
PROJ. ENG.	DATE 1-4-73	
PROD.	DATE 1-4-73	
NEXT HIGHER ASSEMBLY D-IA-7009180-0-0		SIZE K / CODE WL / NUMBER DH11-Ø-2 / REV. C
SCALE		
SHEET 1 OF		DIST.

DEC FORM NO. DRB 109

RUN NAME	A/P	PIN NAME	ORDER PIN	BAY - ORDER	Q	DRAW OPT	RV	RG	Y	X	Z	REMARKS	NC FLAG	LENGTH EXCEPTIONS	RUN NUMBER
+5V 1	H	A07B1		1-01 *	1						1		N	3-1/8	1
+5V 1	H	A03V2		1-02 *							2		N	6-7/8	1
+5V 1	H	C01U1		1-03 *											1
+5V 1	H			1										10-0/8	1
+5V 2	H	C02U1		1-01 *	1						1		N	6-3/8	2
+5V 2	H	A03U2		1-02 *											2
+5V 2	H			1										6-3/8	2
-5V 1	L	A07B2		1-01 *	1						1		N	6-5/8	3
-5V 1	L	C09B2		1-02 *							2		N	4	3
-5V 1	L	C02B2		1-03 *							1		N	1	3
-5V 1	L	C01B2		1-04 *											3
-5V 1	L			1										11-5/8	3
-5V 2	L	D01B2		1-01 *	2						2		N	1	4
-5V 2	L	D02B2		1-02 *							1		N	4	4
-5V 2	L	D09B2		1-03 *											4
-5V 2	L			1										5-0/6	4
100 BAUD	H	F09T2				D06								1-PIN RUN	5
110 BAUD	H	F08H1		1-01 *		D05- 3					1		N	1	6
110 BAUD	H	F09H1		1-02 *		D06									6
110 BAUD	H			1										1-0/8	6
1200 BAUD	H	F08J1		1-01 *		D05- 3					1		N	1	7
1200 BAUD	H	F09J1		1-02 *		D06									7
1200 BAUD	H			1										1-0/8	7
134.5 BAUD	H	F08V2		1-01 *		D05- 3					1		N	1	8
134.5 BAUD	H	F09V2		1-02 *		D06									8
134.5 BAUD	H			1										1-0/8	8
150 BAUD	H	F08K1		1-01 *		D05- 3					1		N	1	9
150 BAUD	H	F09K1		1-02 *		D06									9
150 BAUD	H			1										1-0/8	9
1800 BAUD	H	F08U2		1-01 *		D05- 3					1		N	1	10
1800 BAUD	H	F09U2		1-02 *		D06									10
1800 BAUD	H			1										1-0/8	10
2.53 MHZ	H	F05E1		1-01 *		D11- 1					1		N	2-4/8	11
9.53 MHZ	H	F09E1		1-02 *		D06									11
2.53 MHZ	H			1										2-4/8	11
200 BAUD	H	F08R1		1-01 *		D05- 3					1		N	1	12
200 BAUD	H	F09R1		1-02 *		D06									12
200 BAUD	H			1										1-0/8	12
2400 BAUD	H	F08D1		1-01 *		D05- 3					1		N	1	13
2400 BAUD	H	F09D1		1-02 *		D06									13
2400 BAUD	H			1										1-0/8	13

RUN NAME	A/P	PIN NAME	ORDER PIN	RAY - ORDER	Q	DRAW OPT	RV RG Y	X	Z	REMARKS	NC FLAG	LENGTH EXCEPTIONS	RUN NUMBER
300 BAUD	H	F08L1		1-01 *		D05- 3			1		N	1	14
300 BAUD	H	F09L1		1-02 *		D06							14
300 BAUD	H			1								1-0/8	14
3600 BAUD	H	F09A1				D06						1-PIN RUN	15
4800 BAUD	H	F08N1		1-01 *		D05- 3			1		N	1	16
4800 BAUD	H	F09N1		1-02 *		D06							16
4800 BAUD	H			1								1-0/8	16
5.068 MHZ	H	D09N1		1-01 *		D01- 2			1		N	5-5/8	17
5.068 MHZ	H	F09M2		1-02 *		D06							17
5.068 MHZ	H			1								5-5/8	17
50 BAUD	H	F08P1		1-01 *		D05- 3			1		N	1	18
50 BAUD	H	F09P1		1-02 *		D06							18
50 BAUD	H			1								1-0/8	18
600 BAUD	H	F08S1		1-01 *		D05- 3			1		N	1	19
600 BAUD	H	F09S1		1-02 *		D06							19
600 BAUD	H			1								1-0/8	19
7200 BAUD	H	F09C1				D06						1-PIN RUN	20
75 BAUD	H	F08F1		1-01 *		D05- 3			1		N	1	21
75 BAUD	H	F09F1		1-02 *		D06							21
75 BAUD	H			1								1-0/8	21
9600 BAUD	H	F08B1		1-01 *		D05- 3			1		N	1	22
9600 BAUD	H	F09B1		1-02 *		D06							22
9600 BAUD	H			1								1-0/8	22
A INTR DONE	H	A06L2		1-01 *		D07			1		N	1	23
A INTR DONE	H	A06R1		1-02 *		D07							23
A INTR DONE	H			1								1-0/8	23
A START INTR	L	A06D2		1-01 *		D07			2		N	1-6/8	24
A START INTR	L	A06R2		1-02 *		D07			1		N	0-4/8	24
A START INTR	L	A06N1		1-03 *		D07							24
A START INTR	L			1								2-2/8	24
ADDRS TO BUS	H	A03R2		1-01 *		D12- 1			1		N	2-2/8	25
ADDRS TO BUS	H	B02B1		1-02 *		D07							25
ADDRS TO BUS	H			1								2-2/8	25
ADDRS TO BUS	L	A04M1		1-01 *		D13- 2			1		N	3-3/8	26
ADDRS TO BUS	L	B02F1		1-02 *		D07							26
ADDRS TO BUS	L			1								3-3/8	26
AE ENAB 00	H	D05S2		1-01 *		D11- 1			1		N	2	27
AE ENAB 00	H	D08S2		1-02 *		D05- 1							27
AE ENAB 00	H			1								2-0/8	27
AE ENAB 01	H	D05N2		1-01 *		D11- 1			1		N	2	28
AE ENAB 01	H	D08N2		1-02 *		D05- 1							28
AE ENAB 01	H			1								2-0/8	28

RUN NAME	A/P	PIN NAME	ORDER PIN	RAY - ORDER	Q	DRAW OPT	RV RG Y	X	Z	REMARKS	NC FLAG	LENGTH EXCEPTIONS	RUN NUMBER
AE ENAB 02	H	D05C1		1-01 *		D11- 1			1		N	2	29
AE ENAB 02	H	D08C1		1-02 *		D05- 1							29
AE ENAB 02	H			1								2-0/8	29
AE ENAB 03	H	C05P2		1-01 *		D11- 1			1		N	2	30
AE ENAB 03	H	C08P2		1-02 *		D05- 1							30
AE ENAB 03	H			1								2-0/8	30
AE ENAB 04	H	B05E2		1-01 *		D11- 1			1		N	2	31
AE ENAB 04	H	B08E2		1-02 *		D05- 2							31
AE ENAB 04	H			1								2-0/8	31
AE ENAB 05	H	A05S2		1-01 *		D11- 1			1		N	2	32
AE ENAB 05	H	A08S2		1-02 *		D05- 2							32
AE ENAB 05	H			1								2-0/8	32
AE ENAB 06	H	A05K2		1-01 *		D11- 1			1		N	2	33
AE ENAB 06	H	A08K2		1-02 *		D05- 2							33
AE ENAB 06	H			1								2-0/8	33
AE ENAB 07	H	A05C1		1-01 *		D11- 1			1		N	2	34
AE ENAB 07	H	A08C1		1-02 *		D05- 2							34
AE ENAB 07	H			1								2-0/8	34
AE ENAB 08	H	D05T2		1-01 *		D11- 1			1		N	2	35
AE ENAB 08	H	D08T2		1-02 *		D05- 3							35
AE ENAB 08	H			1								2-0/8	35
AE ENAB 09	H	D05L2		1-01 *		D11- 1			1		N	2	36
AE ENAB 09	H	D08L2		1-02 *		D05- 3							36
AE ENAB 09	H			1								2-0/8	36
AE ENAB 10	H	D05F2		1-01 *		D11- 1			1		N	2	37
AE ENAB 10	H	D08F2		1-02 *		D05- 3							37
AE ENAB 10	H			1								2-0/8	37
AE ENAB 11	H	C05T2		1-01 *		D11- 1			1		N	2	38
AE ENAB 11	H	C08T2		1-02 *		D05- 3							38
AE ENAB 11	H			1								2-0/8	38
AE ENAB 12	H	B05J1		1-01 *		D11- 1			1		N	2	39
AE ENAB 12	H	B08J1		1-02 *		D05- 4							39
AE ENAB 12	H			1								2-0/8	39
AE ENAB 13	H	A05V2		1-01 *		D11- 1			1		N	2	40
AE ENAB 13	H	A08V2		1-02 *		D05- 4							40
AE ENAB 13	H			1								2-0/8	40
AE ENAB 14	H	A05M2		1-01 *		D11- 1			1		N	2	41
AE ENAB 14	H	A08M2		1-02 *		D05- 4							41
AE ENAB 14	H			1								2-0/8	41
AE ENAB 15	H	A05E1		1-01 *		D11- 1			1		N	2	42
AE ENAB 15	H	A08E1		1-02 *		D05- 4							42
AE ENAB 15	H			1								2-0/8	42

RUN NAME	A/P	PIN NAME	ORDER PIN	BAY - ORDER	Q	DRAW OPT	RV	RG	Y	X	Z	REMARKS	NC FLAG	LENGTH EXCEPTIONS	RUN NUMBER
AE GO	L	C04S2		1-01 *		D13- 1					1		N	5-1/8	43
AE GO	L	E05K1		1-02 *		D11- 1									43
AE GO	L			1										5-1/8	43
AE STROBE	H	A05N2		1-01 *		D11- 1					1		N	8-7/8	44
AE STROBE	H	D03E1		1-02 *		D12- 1									44
AE STROBE	H			1										8-7/8	44
B INTR DONE	H	A06M2		1-01 *		D07					1		N	1	45
B INTR DONE	H	A06S1		1-02 *		D07									45
B INTR DONE	H			1										1-0/8	45
B START INTR	L	A06P2		1-01 *		D07					1		N	0-4/8	46
B START INTR	L	A06S2		1-02 *		D07									46
B START INTR	L			1										0-4/8	46
BAR 00	H	D03K1		1-01 *		D12- 2					1		N	3-5/8	47
BAR 00	H	E04K2		1-02 *		D13- 1									47
BAR 00	H			1										3-5/8	47
BAR 01	H	E03F2		1-01 *		D12- 2					1		N	1-3/8	48
BAR 01	H	E04N1		1-02 *		D13- 1									48
BAR 01	H			1										1-3/8	48
BAR 02	H	E04S1		1-01 *		D13- 1					1		N	2-3/8	49
BAR 02	H	F03E1		1-02 *		D12- 2									49
BAR 02	H			1										2-3/8	49
BAR 03	H	E03V2		1-01 *		D12- 2					1		N	1	50
BAR 03	H	E04V2		1-02 *		D13- 1									50
BAR 03	H			1										1-0/8	50
BAR 04	H	D03E2		1-01 *		D12- 2					1		N	7-5/8	51
BAR 04	H	F04T2		1-02 *		D13- 1									51
BAR 04	H			1										7-5/8	51
BAR 05	H	C04S1		1-01 *		D13- 1					1		N	4-5/8	52
BAR 05	H	E03E2		1-02 *		D12- 2									52
BAR 05	H			1										4-5/8	52
BAR 06	H	E03P2		1-01 *		D12- 2					1		N	2-7/8	53
BAR 06	H	F04J1		1-02 *		D13- 1									53
BAR 06	H			1										2-7/8	53
BAR 07	H	F03A1		1-01 *		D12- 2					1		N	1-3/8	54
BAR 07	H	F04E2		1-02 *		D13- 1									54
BAR 07	H			1										1-3/8	54
BAR 08	H	C03R1		1-01 *		D12- 3					1		N	5-3/8	55
BAR 08	H	E04K1		1-02 *		D13- 1									55
BAR 08	H			1										5-3/8	55
BAR 09	H	C03R1		1-01 *		D12- 3					1		N	7-1/8	56
BAR 09	H	E04M1		1-02 *		D13- 1									56
BAR 09	H			1										7-1/8	56

RUN NAME	A/P	PIN NAME	ORDER PIN	BAY - ORDER	Q	DRAW OPT	RV	RG	Y	X	Z	REMARKS	NC FLAG	LENGTH EXCEPTIONS	RUN NUMBER
BAR 10	H	B03N1		1-01 *		D12- 3					1		N	9-1/8	57
BAR 10	H	E04S2		1-02 *		D13- 1									57
BAR 10	H			1										9-1/8	57
BAR 11	H	A03V1		1-01 *		D12- 3					1		N	11-1/8	58
BAR 11	H	E04U1		1-02 *		D13- 1									58
BAR 11	H			1										11-1/8	58
BAR 12	H	B03E1		1-01 *		D12- 3					1		N	11-3/8	59
BAR 12	H	F04E1		1-02 *		D13- 1									59
BAR 12	H			1										11-3/8	59
BAR 13	H	B03R1		1-01 *		D12- 3					1		N	10-5/8	60
BAR 13	H	F04H2		1-02 *		D13- 1									60
BAR 13	H			1										10-5/8	60
BAR 14	H	C03H1		1-01 *		D12- 3					1		N	9-7/8	61
BAR 14	H	F04P2		1-02 *		D13- 1									61
BAR 14	H			1										9-7/8	61
BAR 15	H	C03S1		1-01 *		D12- 3					1		N	8-7/8	62
BAR 15	H	F04S1		1-02 *		D13- 1									62
BAR 15	H			1										8-7/8	62
BC MEM WRITE ENAB	L	B03T2		1-01 *		D12- 1					1		N	7-1/8	63
BC MEM WRITE ENAB	L	E04H1		1-02 *		D13- 2									63
BC MEM WRITE ENAB	L			1										7-1/8	63
BG 4 AB	H	A07S1		1-01 *		D08					1		N	0-5/8	64
BG 4 AB	H	A07T2		1-02 *		D08									64
BG 4 AB	H			1										0-5/8	64
BG 4 BC	H	A07C1		1-01 *		D08					1		N	13-7/8	65
BG 4 BC	H	E02L2		1-02 *		D09					2		N	3-3/8	65
BG 4 BC	H	F01E1		1-03 *		D08									65
BG 4 BC	H			1										17-2/8	65
BG 4 IN A	H	A07S2		1-01 *		D08					1		N	4-7/8	66
BG 4 IN A	H	B01E2		1-02 *		D08									66
BG 4 IN A	H			1										4-7/8	66
BG 4 OUT C	H	B09E2		1-01 *		D08					1		N	12-1/8	67
BG 4 OUT C	H	E02K2		1-02 *		D09					2		N	2-7/8	67
BG 4 OUT C	H	F01A1		1-03 *		D08									67
BG 4 OUT C	H			1										15-0/8	67
BG 5 AB	H	A07P1		1-01 *		D08					1		N	0-5/8	68
BG 5 AB	H	A07R2		1-02 *		D08									68
BG 5 AB	H			1										0-5/8	68
BG 5 IN A	H	A07P2		1-01 *		D08					1		N	4-7/8	69
BG 5 IN A	H	B01B1		1-02 *		D08									69
BG 5 IN A	H			1										4-7/8	69

RUN NAME	A/P	PIN NAME	ORDER PIN	BAY - ORDER	Q	DRAW OPT	RV	RG	Y	X	Z	REMARKS	NC FLAG	LENGTH EXCEPTIONS	RUN NUMBER
BG 5 OUT B	H	A07R1		1-01	*	D08					1		N	2-1/8	70
BG 5 OUT B	H	B09B1		1-02	*	D08									70
BG 5 OUT B	H			1										2-1/8	70
BG 6 AB	H	A07M1		1-01	*	D08					1		N	0-5/8	71
BG 6 AB	H	A07N2		1-02	*	D08									71
BG 6 AB	H			1										0-5/8	71
BG 6 IN A	H	A07M2		1-01	*	D08					1		N	5-1/8	72
BG 6 IN A	H	B01A1		1-02	*	D08									72
BG 6 IN A	H			1										5-1/8	72
BG 6 OUT B	H	A07N1		1-01	*	D08					1		N	2-3/8	73
BG 6 OUT B	H	B09A1		1-02	*	D08									73
BG 6 OUT B	H			1										2-3/8	73
BG 7 AB	H	A07K1		1-01	*	D08					1		N	0-5/8	74
BG 7 AB	H	A07L2		1-02	*	D08									74
BG 7 AB	H			1										0-5/8	74
BG 7 IN A	H	A01V1		1-01	*	D08					1		N	4-5/8	75
BG 7 IN A	H	A07K2		1-02	*	D08									75
BG 7 IN A	H			1										4-5/8	75
BG 7 OUT B	H	A07L1		1-01	*	D08					1		N	1-7/8	76
BG 7 OUT B	H	A09V1		1-02	*	D08									76
BG 7 OUT B	H			1										1-7/8	76
BG IN A	H	A06B1		1-01	*	D07					1		N	2-7/8	77
BG IN A	H	A07U2		1-02	*	D08									77
BG IN A	H			1										2-7/8	77
BG IN B	H	A06E1		1-01	*	D08					1		N	2-3/8	78
BG IN B	H	A07U1		1-02	*	D08									78
BG IN B	H			1										2-3/8	78
BG OUT A	H	A06V2		1-01	*	D07					1		N	1	79
BG OUT A	H	A07V2		1-02	*	D08									79
BG OUT A	H			1										1-0/8	79
BG OUT B	H	A06A1		1-01	*	D08					1		N	3-1/8	80
BG OUT B	H	A07V1		1-02	*	D08									80
BG OUT B	H			1										3-1/8	80
BR 4	L	B09D2		1-01	*	D08					2		N	3-7/8	81
BR 4	L	A07H2		1-02	*	D08					1		N	0-4/8	81
BR 4	L	A07H1		1-03	*	D08					2		N	4	81
BR 4	L	B01D2		1-04	*	D08					1		N	12-3/8	81
BR 4	L	F01P1		1-05	*	D08									81
BR 4	L			1										20-6/8	81
BR 5	L	A07F1		1-01	*	D08					1		N	0-4/8	82
BR 5	L	A07F2		1-02	*	D08					2		N	3-3/8	82
BR 5	L	B09C1		1-03	*	D08					1		N	4-4/8	82
BR 5	L	B01C1		1-04	*	D08									82
BR 5	L			1										8-3/8	82

RUN NAME	A/P	PIN NAME	ORDER PIN	BAY - ORDER	Q	DRAW OPT	RV	RG	Y	X	Z	REMARKS	NC FLAG	LENGTH EXCEPTIONS	RUN NUMBER
BR 6	L	A01U2		1-01	*	D08					1		N	4-4/8	83
BR 6	L	A09U2		1-02	*	D08					2		N	2-4/8	83
BR 6	L	A07E1		1-03	*	D08					1		N	0-4/8	83
BR 6	L	A07E2		1-04	*	D08									83
BR 6	L			1										7-4/8	83
BR 7	L	A01T2		1-01	*	D08					1		N	4-4/8	84
BR 7	L	A09T2		1-02	*	D08					2		N	2-4/8	84
BR 7	L	A07D1		1-03	*	D08					1		N	0-4/8	84
BR 7	L	A07D2		1-04	*	D08									84
BR 7	L			1										7-4/8	84
BUF DATA 00	H	A04J1		1-01	*	D13- 2					2		N	3-3/8	85
BUF DATA 00	H	B05F1		1-02	*	D11- 2					1		N	9-1/8	85
BUF DATA 00	H	E03H2		1-03	*	D12- 1									85
BUF DATA 00	H			1										12-4/8	85
BUF DATA 01	H	A04B1		1-01	*	D13- 2					2		N	2-1/8	86
BUF DATA 01	H	A03N1		1-02	*	D12- 1					1		N	2-5/8	86
BUF DATA 01	H	B05B1		1-03	*	D11- 2									86
BUF DATA 01	H			1										4-6/8	86
BUF DATA 02	H	A05U1		1-01	*	D11- 2					2		N	2-7/8	87
BUF DATA 02	H	B03J1		1-02	*	D12- 1					1		N	5-7/8	87
BUF DATA 02	H	D04D2		1-03	*	D13- 2									87
BUF DATA 02	H			1										8-6/8	87
BUF DATA 03	H	A04H1		1-01	*	D13- 2					2		N	1-7/8	88
BUF DATA 03	H	A05S1		1-02	*	D11- 2					1		N	14-7/8	88
BUF DATA 03	H	F03U1		1-03	*	D12- 1									88
BUF DATA 03	H			1										16-6/8	88
BUF DATA 04	H	A04S2		1-01	*	D13- 2					1		N	2-5/8	89
BUF DATA 04	H	B03H2		1-02	*	D12- 1					2		N	1-3/8	89
BUF DATA 04	H	B05M1		1-03	*	D11- 2									89
BUF DATA 04	H			1										4-0/8	89
BUF DATA 05	H	A04K1		1-01	*	D13- 2					1		N	0-5/8	90
BUF DATA 05	H	A03N2		1-02	*	D12- 1					2		N	4-3/8	90
BUF DATA 05	H	B05U1		1-03	*	D11- 2									90
BUF DATA 05	H			1										5-0/8	90
BUF DATA 06	H	B03H1		1-01	*	D12- 1					2		N	3-5/8	91
BUF DATA 06	H	C05E1		1-02	*	D11- 2					1		N	0-4/8	91
BUF DATA 06	H	C04H2		1-03	*	D13- 2									91
BUF DATA 06	H			1										4-1/8	91
BUF DATA 07	H	A04S1		1-01	*	D13- 2					1		N	3-3/8	92
BUF DATA 07	H	B03S2		1-02	*	D12- 1					2		N	2-1/8	92
BUF DATA 07	H	C05E2		1-03	*	D11- 2									92
BUF DATA 07	H			1										5-4/8	92

RUN NAME	A/P	PIN NAME	ORDER PIN	BAY - ORDER	Q	DRAW OPT	RV	RG	Y	X	Z	REMARKS	NC FLAG	LENGTH EXCEPTIONS	RUN NUMBER
BUF DATA 08	H	B03K1		1-01 *		D12- 1					2		N	1-3/8	93
BUF DATA 08	H	B04D1		1-02 *		D13- 2					1		N	10-3/8	93
BUF DATA 08	H	E05V1		1-03 *		D11- 2									93
BUF DATA 08	H			1										11-6/8	93
BUF DATA 09	H	A04T2		1-01 *		D13- 7					2		N	2-3/8	94
BUF DATA 09	H	B03F2		1-02 *		D12- 1					1		N	12-3/8	94
BUF DATA 09	H	F05M2		1-03 *		D11- 2									94
BUF DATA 09	H			1										14-6/8	94
BUF DATA 10	H	A03M1		1-01 *		D12- 1					1		N	8-1/8	95
BUF DATA 10	H	D04E1		1-02 *		D13- 2					2		N	4-5/8	95
BUF DATA 10	H	E05S1		1-03 *		D11- 2									95
BUF DATA 10	H			1										12-6/8	95
BUF DATA 11	H	A03A1		1-01 *		D12- 1					2		N	3-7/8	96
BUF DATA 11	H	B04C1		1-02 *		D13- 2					1		N	12-5/8	96
BUF DATA 11	H	F05L2		1-03 *		D11- 2									96
BUF DATA 11	H			1										16-4/8	96
BUF DATA 12	H	C04D1		1-01 *		D13- 2					2		N	2-1/8	97
BUF DATA 12	H	C03T2		1-02 *		D12- 1					1		N	7-7/8	97
BUF DATA 12	H	F05E2		1-03 *		D11- 2									97
BUF DATA 12	H			1										10-0/8	97
BUF DATA 13	H	B04E1		1-01 *		D13- 2					2		N	1-5/8	98
BUF DATA 13	H	B03R2		1-02 *		D12- 1					1		N	10-7/8	98
BUF DATA 13	H	F05F2		1-03 *		D11- 2									98
BUF DATA 13	H			1										12-4/8	98
BUF DATA 14	H	A03P2		1-01 *		D12- 1					2		N	5-3/8	99
BUF DATA 14	H	C04F2		1-02 *		D13- 2					1		N	8-7/8	99
BUF DATA 14	H	F05J1		1-03 *		D11- 2									99
BUF DATA 14	H			1										14-2/8	99
BUF DATA 15	H	A03P1		1-01 *		D12- 1					2		N	4-7/8	100
BUF DATA 15	H	C04C1		1-02 *		D13- 2					1		N	10-5/8	100
BUF DATA 15	H	F05S2		1-03 *		D11- 2									100
BUF DATA 15	H			1										15-4/8	100
BUS A00	L	B09H2		1-01 *		D10					1		N	3	101
BUS A00	L	B04H2		1-02 *		D13- 2					2		N	2	101
BUS A00	L	B01H2		1-03 *		D09					1		N	8-2/8	101
BUS A00	L	E01H2		1-04 *		D09									101
BUS A00	L			1										13-2/8	101
BUS A01	L	B09H1		1-01 *		D10					1		N	3	102
BUS A01	L	B04H1		1-02 *		D13- 2					2		N	2	102
BUS A01	L	B01H1		1-03 *		D09					1		N	8-2/8	102
BUS A01	L	E01H1		1-04 *		D09									102
BUS A01	L			1										13-2/8	102

RUN NAME	A/P	PIN NAME	ORDER PIN	BAY - ORDER	Q	DRAW OPT	RV	RG	Y	X	Z	REMARKS	NC FLAG	LENGTH EXCEPTIONS	RUN NUMBER
BUS A02	L	B09J2		1-01 *		D10					1		N	3	103
BUS A02	L	B04J2		1-02 *		D13- 2					2		N	2	103
BUS A02	L	B01J2		1-03 *		D09					1		N	8-1/8	103
BUS A02	L	E01F1		1-04 *		D09									103
BUS A02	L			1										13-1/8	103
BUS A03	L	B09J1		1-01 *		D10					1		N	3	104
BUS A03	L	B04J1		1-02 *		D13- 2					2		N	2	104
BUS A03	L	B01J1		1-03 *		D09					1		N	9-5/8	104
BUS A03	L	E01V2		1-04 *		D09									104
BUS A03	L			1										14-5/8	104
BUS A04	L	B09K2		1-01 *		D10					1		N	3	105
BUS A04	L	B04K2		1-02 *		D13- 2					2		N	2	105
BUS A04	L	B01K2		1-03 *		D09					1		N	9-2/8	105
BUS A04	L	E01U2		1-04 *		D09									105
BUS A04	L			1										14-2/8	105
BUS A05	L	B09K1		1-01 *		D10					1		N	3	106
BUS A05	L	B04K1		1-02 *		D13- 2					2		N	2	106
BUS A05	L	B01K1		1-03 *		D09					1		N	9-3/8	106
BUS A05	L	E01V1		1-04 *		D09									106
BUS A05	L			1										14-3/8	106
BUS A06	L	B09L2		1-01 *		D10					1		N	3	107
BUS A06	L	B04L2		1-02 *		D13- 2					2		N	2	107
BUS A06	L	B01L2		1-03 *		D09					1		N	9-3/8	107
BUS A06	L	E01U1		1-04 *		D09									107
BUS A06	L			1										14-3/8	107
BUS A07	L	B09L1		1-01 *		D10					1		N	3	108
BUS A07	L	B04L1		1-02 *		D13- 2					2		N	2	108
BUS A07	L	B01L1		1-03 *		D09					1		N	8-5/8	108
BUS A07	L	E01P2		1-04 *		D09									108
BUS A07	L			1										13-5/8	108
BUS A08	L	B09M2		1-01 *		D10					1		N	3	109
BUS A08	L	B04M2		1-02 *		D13- 2					2		N	2	109
BUS A08	L	B01M2		1-03 *		D09					1		N	8-3/8	109
BUS A08	L	E01N2		1-04 *		D09									109
BUS A08	L			1										13-3/8	109
BUS A09	L	B09M1		1-01 *		D10					1		N	3	110
BUS A09	L	B04M1		1-02 *		D13- 2					2		N	2	110
BUS A09	L	B01M1		1-03 *		D09					1		N	8-5/8	110
BUS A09	L	E01R1		1-04 *		D09									110
BUS A09	L			1										13-5/8	110
BUS A10	L	B09N2		1-01 *		D10					1		N	3	111
BUS A10	L	B04N2		1-02 *		D13- 2					2		N	2	111
BUS A10	L	B01N2		1-03 *		D09					1		N	8-5/8	111
BUS A10	L	E01P1		1-04 *		D09									111
BUS A10	L			1										13-5/8	111

RUN NAME	A/P	PIN NAME	ORDER PIN	BAY - ORDER	Q	DRAW OPT	RV	RG	Y	X	Z	REMARKS	NC FLAG	LENGTH EXCEPTIONS	RUN NUMBER
BUS A11	L	B09N1		1-01 *		D10					1		N	3	112
BUS A11	L	B04N1		1-02 *		D13- 2					2		N	2	112
BUS A11	L	B01N1		1-03 *		D09					1		N	8	112
BUS A11	L	E01L1		1-04 *		D09									112
BUS A11	L			1										13-0/8	112
BUS A12	L	B09P2		1-01 *		D10					1		N	3	113
BUS A12	L	B04P2		1-02 *		D13- 2					2		N	2	113
BUS A12	L	B01P2		1-03 *		D09					1		N	7-1/8	113
BUS A12	L	E01C1		1-04 *		D09									113
BUS A12	L			1										12-1/8	113
BUS A13	L	B09P1		1-01 *		D10					1		N	3	114
BUS A13	L	B04P1		1-02 *		D13- 2					2		N	2	114
BUS A13	L	B01P1		1-03 *		D09					1		N	7-7/8	114
BUS A13	L	E01K2		1-04 *		D09									114
BUS A13	L			1										12-7/8	114
BUS A14	L	B09R2		1-01 *		D10					1		N	3	115
BUS A14	L	B04R2		1-02 *		D13- 2					2		N	2	115
BUS A14	L	B01R2		1-03 *		D09					1		N	7-7/8	115
BUS A14	L	E01K1		1-04 *		D09									115
BUS A14	L			1										12-7/8	115
BUS A15	L	B09R1		1-01 *		D10					1		N	3	116
BUS A15	L	B04R1		1-02 *		D13- 2					2		N	2	116
BUS A15	L	B01R1		1-03 *		D09					1		N	7-1/8	116
BUS A15	L	E01D2		1-04 *		D09									116
BUS A15	L			1										12-1/8	116
BUS A16	L	B09S2		1-01 *		D10					1		N	3	117
BUS A16	L	B04S2		1-02 *		D13- 2					2		N	2	117
BUS A16	L	B01S2		1-03 *		D09					1		N	7	117
BUS A16	L	E01E2		1-04 *		D09									117
BUS A16	L			1										12-0/8	117
BUS A17	L	B09S1		1-01 *		D10					1		N	3	118
BUS A17	L	B04S1		1-02 *		D13- 2					2		N	2	118
BUS A17	L	B01S1		1-03 *		D09					1		N	6-7/8	118
BUS A17	L	E01D1		1-04 *		D09									118
BUS A17	L			1										11-7/8	118
BUS AC LO	L	B01F1		1-01 *		D10					1		N	4-4/8	119
BUS AC LO	L	B09F1		1-02 *		D10									119
BUS AC LO	L			1										4-4/8	119
BUS BBSY	L	A09P2		1-01 *		D10					2		N	2-6/8	120
BUS BBSY	L	A06D1		1-02 *		D07					1		N	2-4/8	120
BUS BBSY	L	A02D1		1-03 *		D07					2		N	1-7/8	120
BUS BBSY	L	A01P2		1-04 *		D09					1		N	12-5/8	120
BUS BBSY	L	F01D1		1-05 *		D09									120
BUS BBSY	L			1										19-6/8	120

RUN NAME	A/P	PIN NAME	ORDER PIN	BAY - ORDER	Q	DRAW OPT	RV	RG	Y	X	Z	REMARKS	NC FLAG	LENGTH EXCEPTIONS	RUN NUMBER
BUS C0	L	B09U2		1-01 *		D10					2		N	3	121
BUS C0	L	B04U2		1-02 *		D13- 1					1		N	1-7/8	121
BUS C0	L	B02K2		1-03 *		D07					2		N	1-7/8	121
BUS C0	L	B01U2		1-04 *		D09					1		N	7-1/8	121
BUS C0	L	E01J2		1-05 *		D09									121
BUS C0	L			1										13-7/8	121
BUS C1	L	B09T2		1-01 *		D10					2		N	3	122
BUS C1	L	B04T2		1-02 *		D13- 1					1		N	2-4/8	122
BUS C1	L	B02D1		1-03 *		D07					2		N	2-1/8	122
BUS C1	L	B01T2		1-04 *		D09					1		N	7	122
BUS C1	L	E01F2		1-05 *		D09									122
BUS C1	L			1										14-5/8	122
BUS DATA 00	L	A09C1		1-01 *		D10					1		N	3-4/8	123
BUS DATA 00	L	A03C1		1-02 *		D12- 2					2		N	1-4/8	123
BUS DATA 00	L	A01C1		1-03 *		D09					1		N	11-5/8	123
BUS DATA 00	L	E02F1		1-04 *		D09									123
BUS DATA 00	L			1										16-5/8	123
BUS DATA 01	L	A09D2		1-01 *		D10					1		N	3-4/8	124
BUS DATA 01	L	A03D2		1-02 *		D12- 1					2		N	1-4/8	124
BUS DATA 01	L	A01D2		1-03 *		D09					1		N	11-5/8	124
BUS DATA 01	L	E02K1		1-04 *		D09									124
BUS DATA 01	L			1										16-5/8	124
BUS DATA 02	L	A09D1		1-01 *		D10					2		N	1-7/8	125
BUS DATA 02	L	A06E2		1-02 *		D07					1		N	2-1/8	125
BUS DATA 02	L	A03D1		1-03 *		D12- 1					2		N	1-4/8	125
BUS DATA 02	L	A01D1		1-04 *		D09					1		N	11-3/8	125
BUS DATA 02	L	E02R2		1-05 *		D09					2		N	4-1/8	125
BUS DATA 02	L	F01E2		1-06 *		D09									125
BUS DATA 02	L			1										21-0/8	125
BUS DATA 03	L	A09E2		1-01 *		D10					2		N	2-5/8	126
BUS DATA 03	L	A06L1		1-02 *		D07					1		N	2-3/8	126
BUS DATA 03	L	A03E2		1-03 *		D12- 2					2		N	1-4/8	126
BUS DATA 03	L	A01E2		1-04 *		D09					1		N	11-5/8	126
BUS DATA 03	L	E02J1		1-05 *		D09					2		N	3-7/8	126
BUS DATA 03	L	F01L1		1-06 *		D09									126
BUS DATA 03	L			1										22-0/8	126
BUS DATA 04	L	A09E1		1-01 *		D10					2		N	1-7/8	127
BUS DATA 04	L	A06N2		1-02 *		D07					1		N	3-1/8	127
BUS DATA 04	L	A03E1		1-03 *		D12- 1					2		N	1-4/8	127
BUS DATA 04	L	A01E1		1-04 *		D09					1		N	13-7/8	127
BUS DATA 04	L	F02B1		1-05 *		D09					2		N	1-7/8	127
BUS DATA 04	L	F01N2		1-06 *		D09									127
BUS DATA 04	L			1										22-2/8	127

RUN NAME	A/P	PIN NAME	ORDER PIN	BAY - ORDER	Q	DRAW OPT	RV	RG	Y	X	Z	REMARKS	NC	LENGTH	EXCEPTIONS FLAG	RUN NUMBER
BUS DATA 05	L	A09F2		1-01	*	D10					2		N	2-2/8		128
BUS DATA 05	L	A06F1		1-02	*	D07					1		N	1-6/8		128
BUS DATA 05	L	A03F2		1-03	*	D12- 2					2		N	1-4/8		128
BUS DATA 05	L	A01F2		1-04	*	D09					1		N	12-5/8		128
BUS DATA 05	L	E02V1		1-05	*	D09					2		N	2-1/8		128
BUS DATA 05	L	F01F1		1-06	*	D09										128
BUS DATA 05	L			1										20-2/8		128
BUS DATA 06	L	A09F1		1-01	*	D10					2		N	1-6/8		129
BUS DATA 06	L	A06F2		1-02	*	D07					1		N	2-2/8		129
BUS DATA 06	L	A03F1		1-03	*	D12- 2					2		N	1-4/8		129
BUS DATA 06	L	A01F1		1-04	*	D09					1		N	13-3/8		129
BUS DATA 06	L	F02A1		1-05	*	D09					2		N	1-1/8		129
BUS DATA 06	L	F01F2		1-06	*	D09										129
BUS DATA 06	L			1										20-0/8		129
BUS DATA 07	L	A09H2		1-01	*	D10					2		N	2-2/8		130
BUS DATA 07	L	A06H1		1-02	*	D07					1		N	1-6/8		130
BUS DATA 07	L	A03H2		1-03	*	D12- 2					2		N	1-4/8		130
BUS DATA 07	L	A01H2		1-04	*	D09					1		N	12-1/8		130
BUS DATA 07	L	E02R1		1-05	*	D09					2		N	2-7/8		130
BUS DATA 07	L	F01H1		1-06	*	D09										130
BUS DATA 07	L			1										20-4/8		130
BUS DATA 08	L	A09H1		1-01	*	D10					2		N	2-1/8		131
BUS DATA 08	L	A06K1		1-02	*	D07					1		N	2-1/8		131
BUS DATA 08	L	A03H1		1-03	*	D12- 3					2		N	1-4/8		131
BUS DATA 08	L	A01H1		1-04	*	D09					1		N	13-7/8		131
BUS DATA 08	L	F02E1		1-05	*	D09					2		N	1-1/8		131
BUS DATA 08	L	F01K1		1-06	*	D09										131
BUS DATA 08	L			1										20-6/8		131
BUS DATA 09	L	A09J2		1-01	*	D10					1		N	3-4/8		132
BUS DATA 09	L	A03J2		1-02	*	D12- 1					2		N	1-4/8		132
BUS DATA 09	L	A01J2		1-03	*	D09					1		N	12-5/8		132
BUS DATA 09	L	E02V2		1-04	*	D09										132
BUS DATA 09	L			1										17-5/8		132
BUS DATA 10	L	A09J1		1-01	*	D10					1		N	3-4/8		133
BUS DATA 10	L	A03J1		1-02	*	D12- 1					2		N	1-4/8		133
BUS DATA 10	L	A01J1		1-03	*	D09					1		N	13-7/8		133
BUS DATA 10	L	F02F1		1-04	*	D09										133
BUS DATA 10	L			1										18-7/8		133
BUS DATA 11	L	A09K2		1-01	*	D10					1		N	3-4/8		134
BUS DATA 11	L	A03K2		1-02	*	D12- 1					2		N	1-4/8		134
BUS DATA 11	L	A01K2		1-03	*	D09					1		N	13-1/8		134
BUS DATA 11	L	F02C1		1-04	*	D09										134
BUS DATA 11	L			1										18-1/8		134
BUS DATA 12	L	A09K1		1-01	*	D10					1		N	3-4/8		135
BUS DATA 12	L	A03K1		1-02	*	D12- 1					2		N	1-4/8		135
BUS DATA 12	L	A01K1		1-03	*	D09					1		N	15-1/8		135
BUS DATA 12	L	F02R2		1-04	*	D09										135
BUS DATA 12	L			1										20-1/8		135

RUN NAME	A/P	PIN NAME	ORDER PIN	BAY - ORDER	Q	DRAW OPT	RV	RG	Y	X	Z	REMARKS	NC	LENGTH	EXCEPTIONS FLAG	RUN NUMBER
BUS DATA 13	L	A09L2		1-01	*	D10					1		N	3-4/8		136
BUS DATA 13	L	A03L2		1-02	*	D12- 1					2		N	1-4/8		136
BUS DATA 13	L	A01L2		1-03	*	D09					1		N	14-7/8		136
BUS DATA 13	L	F02T2		1-04	*	D09										136
BUS DATA 13	L			1										19-7/8		136
BUS DATA 14	L	A09L1		1-01	*	D10					1		N	3-4/8		137
BUS DATA 14	L	A03L1		1-02	*	D12- 1					2		N	1-4/8		137
BUS DATA 14	L	A01L1		1-03	*	D09					1		N	14-7/8		137
BUS DATA 14	L	F02S2		1-04	*	D09										137
BUS DATA 14	L			1										19-7/8		137
BUS DATA 15	L	A09M2		1-01	*	D10					1		N	3-4/8		138
BUS DATA 15	L	A03M2		1-02	*	D12- 3					2		N	1-4/8		138
BUS DATA 15	L	A01M2		1-03	*	D09					1		N	14-3/8		138
BUS DATA 15	L	F02P2		1-04	*	D09										138
BUS DATA 15	L			1										19-3/8		138
BUS DC LO	L	B01F2		1-01	*	D10					1		N	4-4/8		139
BUS DC LO	L	B09F2		1-02	*	D10										139
BUS DC LO	L			1										4-4/8		139
BUS INIT	L	A01A1	A04A1	1-01	*	2					2		N	2		140
BUS INIT	L	A04A1	A09A1	1-02	*						1		N	3		140
BUS INIT	L	A09A1	D08V1	1-03	*						2		N	10-7/8		140
BUS INIT	L	D08V1	F02D1	1-04	*						1		N	5-3/8		140
BUS INIT	L	F02D1		1-05	*											140
BUS INIT	L			1										21-2/8		140
BUS INTR	L	A09B1		1-01	*	D10					1		N	2-6/8		141
BUS INTR	L	A06M1		1-02	*	D07					2		N	3-7/8		141
BUS INTR	L	A01B1		1-03	*	D09					1		N	14-7/8		141
BUS INTR	L	F01M1		1-04	*	D09										141
BUS INTR	L			1										21-4/8		141
BUS MSYN	L	B09V1		1-01	*	D10					2		N	3		142
BUS MSYN	L	B04V1		1-02	*	D13- 1					1		N	2-6/8		142
BUS MSYN	L	B02E1		1-03	*	D07					2		N	2-3/8		142
BUS MSYN	L	B01V1		1-04	*	D09					1		N	6-5/8		142
BUS MSYN	L	E01E1		1-05	*	D09										142
BUS MSYN	L			1										14-6/8		142
BUS NPG IN A	H	A01U1		1-01	*	D08					1		N	2-7/8		143
BUS NPG IN A	H	A02B1		1-02	*	D08										143
BUS NPG IN A	H			1										2-7/8		143
BUS NPG OUT A	H	A02V2		1-01	*	D07					1		N	3-5/8		144
BUS NPG OUT A	H	A09U1		1-02	*	D08										144
BUS NPG OUT A	H			1										3-5/8		144
BUS NPR	L	A09S2		1-01	*	D08					2		N	2-7/8		145
BUS NPR	L	A06J1		1-02	*	D07					1		N	3-3/8		145
BUS NPR	L	A02U2		1-03	*	D07					2		N	1		145
BUS NPR	L	A01S2		1-04	*	D08					1		N	12-7/8		145
BUS NPR	L	F01J1		1-05	*	D08										145
BUS NPR	L			1										20-1/8		145

RUN NAME	A/P	PIN NAME	ORDER PIN	BAY - ORDER	Q	DRAW OPT	RV RG Y	X	Z	REMARKS	NC FLAG	LENGTH EXCEPTIONS	RUN NUMBER
BUS PA	L	A01M1		1-01 *		D10			1		N	4-4/8	146
BUS PA	L	A09M1		1-02 *		D10							146
BUS PA	L			1								4-4/8	146
BUS PB	L	A01N2		1-01 *		D10			1		N	4-4/8	147
BUS PB	L	A09N2		1-02 *		D10							147
BUS PB	L			1								4-4/8	147
BUS REQ A	L	A06U2		1-01 *		D08			1		N	2	148
BUS REQ A	L	A07J2		1-02 *		D08							148
BUS REQ A	L			1								2-0/8	148
BUS REQ B	L	A06P1		1-01 *		D07			1		N	1-3/8	149
BUS REQ B	L	A07J1		1-02 *		D08							149
BUS REQ B	L			1								1-3/8	149
BUS SACK	L	A09R2		1-01 *		D10			2		N	2-1/8	150
BUS SACK	L	A06T2		1-02 *		D07			1		N	2-4/8	150
BUS SACK	L	A02T2		1-03 *		D07			2		N	1	150
BUS SACK	L	A01R2		1-04 *		D09			1		N	14	150
BUS SACK	L	F01T2		1-05 *		D09							150
BUS SACK	L			1								19-5/8	150
BUS SSYN	L	A02C1		1-01 *		D07			1		N	2-4/8	151
BUS SSYN	L	A06C1		1-02 *		D07			2		N	6-3/8	151
BUS SSYN	L	B09U1		1-03 *		D10			1		N	3	151
BUS SSYN	L	B04U1		1-04 *		D13- 1			2		N	2	151
BUS SSYN	L	B01U1		1-05 *		D09			1		N	7-1/8	151
BUS SSYN	L	E01J1		1-06 *		D09			2		N	2-5/8	151
BUS SSYN	L	F01C1		1-07 *		D09							151
BUS SSYN	L			1								23-5/8	151
CA 00	H	A04E1		1-01 *		D13- 2			1		N	8-7/8	152
CA 00	H	D03J2		1-02 *		D12- 2							152
CA 00	H			1								8-7/8	152
CA 01	H	A04D1		1-01 *		D13- 2			1		N	11-5/8	153
CA 01	H	E03F1		1-02 *		D12- 2							153
CA 01	H			1								11-5/8	153
CA 02	H	A04C1		1-01 *		D13- 2			1		N	12-3/8	154
CA 02	H	E03M1		1-02 *		D12- 2							154
CA 02	H			1								12-3/8	154
CA 03	H	A04F1		1-01 *		D13- 2			1		N	12-7/8	155
CA 03	H	E03V1		1-02 *		D12- 2							155
CA 03	H			1								12-7/8	155
CA 04	H	A04R1		1-01 *		D13- 2			1		N	8-1/8	156
CA 04	H	D03K2		1-02 *		D12- 2							156
CA 04	H			1								8-1/8	156
CA 05	H	A04P1		1-01 *		D13- 2			1		N	9-1/8	157
CA 05	H	D03V2		1-02 *		D12- 2							157
CA 05	H			1								9-1/8	157

RUN NAME	A/P	PIN NAME	ORDER PIN	BAY - ORDER	Q	DRAW OPT	RV RG Y	X	Z	REMARKS	NC FLAG	LENGTH EXCEPTIONS	RUN NUMBER
CA 06	H	A04L1		1-01 *		D13- 2			1		N	11-7/8	158
CA 06	H	E03P1		1-02 *		D12- 2							158
CA 06	H			1								11-7/8	158
CA 07	H	A04R2		1-01 *		D13- 2			1		N	12-7/8	159
CA 07	H	F03R1		1-02 *		D12- 2							159
CA 07	H			1								12-7/8	159
CA 08	H	B04A1		1-01 *		D13- 2			1		N	4-7/8	160
CA 08	H	C03S2		1-02 *		D12- 3							160
CA 08	H			1								4-7/8	160
CA 09	H	A04V1		1-01 *		D13- 2			1		N	4-3/8	161
CA 09	H	C03C1		1-02 *		D12- 3							161
CA 09	H			1								4-3/8	161
CA 10	H	A04U2		1-01 *		D13- 2			1		N	3-1/8	162
CA 10	H	B03M1		1-02 *		D12- 3							162
CA 10	H			1								3-1/8	162
CA 11	H	A03S1		1-01 *		D12- 3			1		N	2	163
CA 11	H	B04B1		1-02 *		D13- 2							163
CA 11	H			1								2-0/8	163
CA 12	H	B03E2		1-01 *		D12- 3			1		N	2-5/8	164
CA 12	H	C04A1		1-02 *		D13- 2							164
CA 12	H			1								2-5/8	164
CA 13	H	B03P1		1-01 *		D12- 3			1		N	1-5/8	165
CA 13	H	B04V2		1-02 *		D13- 2							165
CA 13	H			1								1-5/8	165
CA 14	H	B04F1		1-01 *		D13- 2			1		N	3-3/8	166
CA 14	H	C03H2		1-02 *		D12- 3							166
CA 14	H			1								3-3/8	166
CA 15	H	C03R2		1-01 *		D12- 3			1		N	2-1/8	167
CA 15	H	C04B1		1-02 *		D13- 2							167
CA 15	H			1								2-1/8	167
CLEAR CYCLE	L	D01P2		1-01 *		D09			2		N	1	168
CLEAR CYCLE	L	D02P2		1-02 *		D09			1		N	5-7/8	168
CLEAR CYCLE	L	F02R1		1-03 *		D09							168
CLEAR CYCLE	L			1								6-7/8	168
CLEAR MUX	L	D01J1		1-01 *		D09			2		N	1	169
CLEAR MUX	L	D02J1		1-02 *		D09			1		N	6-1/8	169
CLEAR MUX	L	F02M2		1-03 *		D09							169
CLEAR MUX	L			1								7-1/8	169
CLR REQ	L	B02D2		1-01 *		D07			2		N	2-1/8	170
CLR REQ	L	B02U2		1-02 *		D07			1		N	4-3/8	170
CLR REQ	L	D03D1		1-03 *		D12- 1							170
CLR REQ	L			1								6-4/8	170

RUN NAME	A/P	PIN NAME	ORDER PIN	BAY - ORDER	Q	DRAW OPT	RV	RG	Y	X	Z	REMARKS	NC FLAG	LENGTH EXCEPTIONS	RUN NUMBER
CONTROL STROBE LINE 00	H	E04D1		1-01 *		D13- 1					2		N	1-6/8	171
CONTROL STROBE LINE 00	H	E06D2		1-02 *		D03- 2					1		N	2-3/8	171
CONTROL STROBE LINE 00	H	E08S2		1-03 *		D05- 1									171
CONTROL STROBE LINE 00	H			1										4-1/8	171
CONTROL STROBE LINE 01	H	E04C1		1-01 *		D13- 1					2		N	3-5/8	172
CONTROL STROBE LINE 01	H	E08M2		1-02 *		D05- 1					1		N	4-5/8	172
CONTROL STROBE LINE 01	H	F06R1		1-03 *		D03- 2									172
CONTROL STROBE LINE 01	H			1										8-2/8	172
CONTROL STROBE LINE 02	H	E04A1		1-01 *		D13- 1					1		N	2-4/8	173
CONTROL STROBE LINE 02	H	E06P2		1-02 *		D03- 3					2		N	1-6/8	173
CONTROL STROBE LINE 02	H	E08H2		1-03 *		D05- 1									173
CONTROL STROBE LINE 02	H			1										4-2/8	173
CONTROL STROBE LINE 03	H	C06R2		1-01 *		D03- 3					1		N	4-7/8	174
CONTROL STROBE LINE 03	H	E08C1		1-02 *		D05- 1					2		N	2-3/8	174
CONTROL STROBE LINE 03	H	E04B1		1-03 *		D13- 1									174
CONTROL STROBE LINE 03	H			1										7-2/8	174
CONTROL STROBE LINE 04	H	C08K2		1-01 *		D05- 2					1		N	3-7/8	175
CONTROL STROBE LINE 04	H	D06E1		1-02 *		D03- 4					2		N	2-1/8	175
CONTROL STROBE LINE 04	H	D04S1		1-03 *		D13- 1									175
CONTROL STROBE LINE 04	H			1										6-0/8	175
CONTROL STROBE LINE 05	H	C08C1		1-01 *		D05- 2					1		N	5-5/8	176
CONTROL STROBE LINE 05	H	D06S1		1-02 *		D03- 4					2		N	1-5/8	176
CONTROL STROBE LINE 05	H	D04V1		1-03 *		D13- 1									176
CONTROL STROBE LINE 05	H			1										7-2/8	176
CONTROL STROBE LINE 06	H	B08U2		1-01 *		D05- 2					2		N	4-3/8	177
CONTROL STROBE LINE 06	H	C04V2		1-02 *		D13- 1					1		N	7-1/8	177
CONTROL STROBE LINE 06	H	F06B1		1-03 *		D03- 5									177
CONTROL STROBE LINE 06	H			1										11-4/8	177
CONTROL STROBE LINE 07	H	B08P2		1-01 *		D05- 2					2		N	2-1/8	178
CONTROL STROBE LINE 07	H	C06A1		1-02 *		D03- 5					1		N	3-3/8	178
CONTROL STROBE LINE 07	H	C04U1		1-03 *		D13- 1									178
CONTROL STROBE LINE 07	H			1										5-4/8	178
CONTROL STROBE LINE 08	H	C04R2		1-01 *		D13- 1					1		N	5-7/8	179
CONTROL STROBE LINE 08	H	E07D2		1-02 *		D04- 2					2		N	2-5/8	179
CONTROL STROBE LINE 08	H	E08V2		1-03 *		D05- 3									179
CONTROL STROBE LINE 08	H			1										8-4/8	179
CONTROL STROBE LINE 09	H	C04N1		1-01 *		D13- 1					1		N	7-7/8	180
CONTROL STROBE LINE 09	H	E08N2		1-02 *		D05- 3					2		N	4-1/8	180
CONTROL STROBE LINE 09	H	F07R1		1-03 *		D04- 2									180
CONTROL STROBE LINE 09	H			1										12-0/8	180
CONTROL STROBE LINE 10	H	C04U2		1-01 *		D13- 1					1		N	6-5/8	181
CONTROL STROBE LINE 10	H	E08J2		1-02 *		D05- 3					2		N	1-3/8	181
CONTROL STROBE LINE 10	H	E07P2		1-03 *		D04- 3									181
CONTROL STROBE LINE 10	H			1										8-0/8	181

RUN NAME	A/P	PIN NAME	ORDER PIN	BAY - ORDER	Q	DRAW OPT	RV	RG	Y	X	Z	REMARKS	NC FLAG	LENGTH EXCEPTIONS	RUN NUMBER
CONTROL STROBE LINE 11	H	A04V2		1-01 *		D13- 1					1		N	6-5/8	182
CONTROL STROBE LINE 11	H	C07R2		1-02 *		D04- 3					2		N	4-7/8	182
CONTROL STROBE LINE 11	H	E08D2		1-03 *		D05- 3									182
CONTROL STROBE LINE 11	H			1										11-4/8	182
CONTROL STROBE LINE 12	H	A04U1		1-01 *		D13- 1					1		N	7-1/8	183
CONTROL STROBE LINE 12	H	C08L2		1-02 *		D05- 4					2		N	3-3/8	183
CONTROL STROBE LINE 12	H	D07E1		1-03 *		D04- 4									183
CONTROL STROBE LINE 12	H			1										10-4/8	183
CONTROL STROBE LINE 13	H	A04N1		1-01 *		D13- 1					1		N	6-7/8	184
CONTROL STROBE LINE 13	H	C08D2		1-02 *		D05- 4					2		N	5-3/8	184
CONTROL STROBE LINE 13	H	D07S1		1-03 *		D04- 4									184
CONTROL STROBE LINE 13	H			1										12-2/8	184
CONTROL STROBE LINE 14	H	B08V2		1-01 *		D05- 4					2		N	4-1/8	185
CONTROL STROBE LINE 14	H	C04M1		1-02 *		D13- 1					1		N	8-7/8	185
CONTROL STROBE LINE 14	H	F07B1		1-03 *		D04- 5									185
CONTROL STROBE LINE 14	H			1										13-0/8	185
CONTROL STROBE LINE 15	H	B08R2		1-01 *		D05- 4					2		N	1-6/8	186
CONTROL STROBE LINE 15	H	C07A1		1-02 *		D04- 5					1		N	3-6/8	186
CONTROL STROBE LINE 15	H	C04V1		1-03 *		D13- 1									186
CONTROL STROBE LINE 15	H			1										5-4/8	186
D00	H	D01N1		1-01 *		D09					2		N	1	187
D00	H	D02N1		1-02 *		D09					1		N	2-3/8	187
D00	H	E02F2		1-03 *		D09									187
D00	H			1										3-3/8	187
D01	H	D01P1		1-01 *		D09					2		N	1	188
D01	H	D02P1		1-02 *		D09					1		N	2-1/8	188
D01	H	E02E2		1-03 *		D09									188
D01	H			1										3-1/8	188
D02	H	D01H2		1-01 *		D09					2		N	1	189
D02	H	D02H2		1-02 *		D09					1		N	3	189
D02	H	E02H2		1-03 *		D09									189
D02	H			1										4-0/8	189
D03	H	D01J2		1-01 *		D09					2		N	1	190
D03	H	D02J2		1-02 *		D09					1		N	2-4/8	190
D03	H	E02D2		1-03 *		D09									190
D03	H			1										3-4/8	190
DATA READY	L	D05D1		1-01 *		D11- 2					1		N	3-1/8	191
DATA READY	L	D09V1		1-02 *		D01- 2									191
DATA READY	L			1										3-1/8	191
DATA SOURCE A	H	D04T2		1-01 *		D13- 1					1		N	1-3/8	192
DATA SOURCE A	H	E03B2		1-02 *		D12- 2									192
DATA SOURCE A	H			1										1-3/8	192
DATA SOURCE B	H	D03T2		1-01 *		D12- 2					1		N	0-5/8	193
DATA SOURCE B	H	D04U2		1-02 *		D13- 1									193
DATA SOURCE B	H			1										0-5/8	193

RUN NAME	A/P	PIN NAME	ORDER PIN	BAY - ORDER	Q	DRAW OPT	RV	RG	Y	X	Z	REMARKS	NC FLAG	LENGTH	EXCEPTIONS	RUN NUMBER
DATA SOURCE C	H	D03V1		1-01 *		D12- 2					1		N	0-5/8		194
DATA SOURCE C	H	D04U1		1-02 *		D13- 1										194
DATA SOURCE C	H			1										0-5/8		194
DATA STROBE	H	B02M2		1-01 *		D07					2		N	3-7/8		195
DATA STROBE	H	C03U1		1-02 *		D12- 1					1		N	6-3/8		195
DATA STROBE	H	E04V1		1-03 *		D13- 2										195
DATA STROBE	H			1										10-2/8		195
DATA STROBE	L	B02L2		1-01 *		D07					1		N	1-2/8		196
DATA STROBE	L	B02T2		1-02 *		D07										196
DATA STROBE	L			1										1-2/8		196
DATA TO BUS	H	A03B1		1-01 *		D12- 2					1		N	12-7/8		197
DATA TO BUS	H	E04N2		1-02 *		D13- 1										197
DATA TO BUS	H			1										12-7/8		197
DATA WAIT	L	B02S1		1-01 *		D07					1		N	0-4/8		198
DATA WAIT	L	B02S2		1-02 *		D07										198
DATA WAIT	L			1										0-4/8		198
END CYCLE	H	B02P2		1-01 *		D07					1		N	7-3/8		199
END CYCLE	H	D04V2		1-02 *		D13- 2										199
END CYCLE	H			1										7-3/8		199
END CYCLE	L	B02N2		1-01 *		D07					1		N	0-5/8		200
END CYCLE	L	B03S1		1-02 *		D12- 1										200
END CYCLE	L			1										0-5/8		200
EOC LINE 00	H	E05T2		1-01 *		D11- 4					1		N	2-3/8		201
EOC LINE 00	H	E06B1		1-02 *		D03- 2										201
EOC LINE 00	H			1										2-3/8		201
EOC LINE 01	H	E05U2		1-01 *		D11- 4					1		N	2-7/8		202
EOC LINE 01	H	F06P1		1-02 *		D03- 2										202
EOC LINE 01	H			1										2-7/8		202
EOC LINE 02	H	E06R2		1-01 *		D03- 3					1		N	3-7/8		203
EOC LINE 02	H	F05T2		1-02 *		D11- 4										203
EOC LINE 02	H			1										3-7/8		203
EOC LINE 03	H	C06P2		1-01 *		D03- 3					1		N	6-3/8		204
EOC LINE 03	H	E05S2		1-02 *		D11- 4										204
EOC LINE 03	H			1										6-3/8		204
EOC LINE 04	H	D06R1		1-01 *		D03- 4					1		N	7-7/8		205
EOC LINE 04	H	F05U2		1-02 *		D11- 4										205
EOC LINE 04	H			1										7-7/8		205
EOC LINE 05	H	D06R1		1-01 *		D03- 4					1		N	6-3/8		206
EOC LINE 05	H	F05S1		1-02 *		D11- 4										206
EOC LINE 05	H			1										6-3/8		206

RUN NAME	A/P	PIN NAME	ORDER PIN	BAY - ORDER	Q	DRAW OPT	RV	RG	Y	X	Z	REMARKS	NC FLAG	LENGTH	EXCEPTIONS	RUN NUMBER
EOC LINE 06	H	E05L1		1-01 *		D11- 4					1		N	2-7/8		207
EOC LINE 06	H	F06D1		1-02 *		D03- 5										207
EOC LINE 06	H			1										2-7/8		207
EOC LINE 07	H	C06C1		1-01 *		D03- 5					1		N	10-5/8		208
EOC LINE 07	H	F05U1		1-02 *		D11- 4										208
EOC LINE 07	H			1										10-5/8		208
EOC LINE 08	H	C05F2		1-01 *		D11- 4					1		N	5-7/8		209
EOC LINE 08	H	F07R1		1-02 *		D04- 2										209
EOC LINE 08	H			1										5-7/8		209
EOC LINE 09	H	C05H2		1-01 *		D11- 4					1		N	9-7/8		210
EOC LINE 09	H	F07P1		1-02 *		D04- 2										210
EOC LINE 09	H			1										9-7/8		210
EOC LINE 10	H	C05H2		1-01 *		D11- 4					1		N	7-1/8		211
EOC LINE 10	H	E07P2		1-02 *		D04- 3										211
EOC LINE 10	H			1										7-1/8		211
EOC LINE 11	H	C05J1		1-01 *		D11- 4					1		N	2		212
EOC LINE 11	H	C07P2		1-02 *		D04- 3										212
EOC LINE 11	H			1										2-0/8		212
EOC LINE 12	H	B05E1		1-01 *		D11- 4					1		N	6-3/8		213
EOC LINE 12	H	D07B1		1-02 *		D04- 4										213
EOC LINE 12	H			1										6-3/8		213
EOC LINE 13	H	B05K1		1-01 *		D11- 4					1		N	7-3/8		214
EOC LINE 13	H	D07R1		1-02 *		D04- 4										214
EOC LINE 13	H			1										7-3/8		214
EOC LINE 14	H	B05V1		1-01 *		D11- 4					1		N	10-1/8		215
EOC LINE 14	H	F07D1		1-02 *		D04- 5										215
EOC LINE 14	H			1										10-1/8		215
EOC LINE 15	H	B05L1		1-01 *		D11- 4					1		N	2-7/8		216
EOC LINE 15	H	C07C1		1-02 *		D04- 5										216
EOC LINE 15	H			1										2-7/8		216

RUN NAME	A/P	PIN NAME	ORDER PIN	BAY - ORDER	Q	DRAW OPT	RV	RG	Y	X	Z	REMARKS	NC FLAG	LENGTH EXCEPTIONS	RUN NUMBER
GND 01		A01B2		1-01 *		D10					2		N	0-1/8	217
GND 01		A01C2		1-02 *		D10					1		N	1-5/8	217
GND 01		A01N1		1-03 *		D10					2		N	0-1/8	217
GND 01		A01P1		1-04 *		D10					1		N	0-1/8	217
GND 01		A01R1		1-05 *		D10					2		N	0-1/8	217
GND 01		A01S1		1-06 *		D10					1		N	0-1/8	217
GND 01		A01T1		1-07 *		D10					2		N	1-5/8	217
GND 01		B01B2		1-08 *		D10					1		N	0-1/8	217
GND 01		B01C2		1-09 *		D10					2		N	0-1/8	217
GND 01		B01D1		1-10 *		D10					1		N	0-1/8	217
GND 01		B01E1		1-11 *		D10					2		N	1-7/8	217
GND 01		B01T1		1-12 *		D10					1		N	0-4/8	217
GND 01		B01V2		1-13 *		D10					2		N	1-1/8	217
GND 01		C01C2		1-14 *							1		N	2-1/8	217
GND 01		C01T1		1-15 *							2		N	1-5/8	217
GND 01		D01C2		1-16 *							1		N	2-1/8	217
GND 01		D01T1		1-17 *							2		N	1-1/8	217
GND 01		E01A1		1-18 *		D09					1		N	0-4/8	217
GND 01		E01C2		1-19 *							2		N	2-1/8	217
GND 01		E01T1		1-20 *							1		N	1-5/8	217
GND 01		F01C2		1-21 *							2		N	1-1/8	217
GND 01		F01J2		1-22 *		D09					1		N	1-5/8	217
GND 01		F01T1		1-23 *											217
GND 01				1										21-6/8	217
GND 02		A02H2		1-01 *	2						2		N	1	218
GND 02		A02C2		1-02 *							1		N	1-1/8	218
GND 02		A02J2		1-03 *		D07					2		N	1-3/8	218
GND 02		A02R1		1-04 *		D07					1		N	0-4/8	218
GND 02		A02T1		1-05 *							2		N	1-5/8	218
GND 02		B02C2		1-06 *							1		N	0-4/8	218
GND 02		B02C1		1-07 *		D07					2		N	1-2/8	218
GND 02		B02J2		1-08 *		D07					1		N	1-2/8	218
GND 02		B02P1		1-09 *		D07					2		N	0-1/8	218
GND 02		B02R1		1-10 *		D07					1		N	0-4/8	218
GND 02		B02T1		1-11 *							2		N	1-3/8	218
GND 02		C02C2		1-12 *							1		N	2-1/8	218
GND 02		C02T1		1-13 *							2		N	1-5/8	218
GND 02		D02C2		1-14 *							1		N	2-1/8	218
GND 02		D02T1		1-15 *							2		N	1-3/8	218
GND 02		E02C2		1-16 *							1		N	2-1/8	218
GND 02		E02T1		1-17 *							2		N	1-5/8	218
GND 02		F02B2		1-18 *		D09					1		N	0-1/8	218
GND 02		F02C2		1-19 *							2		N	2-1/8	218
GND 02		F02T1		1-20 *											218
GND 02				1										23-7/8	218

RUN NAME	A/P	PIN NAME	ORDER PIN	BAY - ORDER	Q	DRAW OPT	RV	RG	Y	X	Z	REMARKS	NC FLAG	LENGTH EXCEPTIONS	RUN NUMBER
GND 03		A02E1		1-01 *	2						2		N	1-3/8	219
GND 03		A03C2		1-02 *							1		N	2-1/8	219
GND 03		A03T1		1-03 *							2		N	1-5/8	219
GND 03		B03C2		1-04 *							1		N	2-1/8	219
GND 03		B03T1		1-05 *							2		N	1-3/8	219
GND 03		C03C2		1-06 *							1		N	2-1/8	219
GND 03		C03T1		1-07 *							2		N	1-5/8	219
GND 03		D03C2		1-08 *							1		N	2-1/8	219
GND 03		D03T1		1-09 *							2		N	1-3/8	219
GND 03		E03C2		1-10 *							1		N	2-1/8	219
GND 03		E03T1		1-11 *							2		N	1-5/8	219
GND 03		F03C2		1-12 *							1		N	2-1/8	219
GND 03		F03T1		1-13 *											219
GND 03				1										21-6/8	219
GND 04		A04C2		1-01 *							1		N	2-1/8	220
GND 04		A04T1		1-02 *							2		N	1-5/8	220
GND 04		B04C2		1-03 *							1		N	2-1/8	220
GND 04		B04T1		1-04 *							2		N	1-3/8	220
GND 04		C04C2		1-05 *							1		N	2-1/8	220
GND 04		C04T1		1-06 *							2		N	1-5/8	220
GND 04		D04C2		1-07 *							1		N	2-1/8	220
GND 04		D04T1		1-08 *							2		N	1-3/8	220
GND 04		E04C2		1-09 *							1		N	2-1/8	220
GND 04		E04T1		1-10 *							2		N	1-5/8	220
GND 04		F04C2		1-11 *							1		N	2-1/8	220
GND 04		F04T1		1-12 *											220
GND 04				1										20-3/8	220
GND 05		A05C2		1-01 *							1		N	2-1/8	221
GND 05		A05T1		1-02 *							2		N	1-5/8	221
GND 05		B05C2		1-03 *							1		N	2-1/8	221
GND 05		B05T1		1-04 *							2		N	1-3/8	221
GND 05		C05C2		1-05 *							1		N	2-1/8	221
GND 05		C05T1		1-06 *							2		N	1-5/8	221
GND 05		D05C2		1-07 *							1		N	2-1/8	221
GND 05		D05T1		1-08 *							2		N	1-3/8	221
GND 05		E05C2		1-09 *							1		N	2-1/8	221
GND 05		E05T1		1-10 *							2		N	1-5/8	221
GND 05		F05C2		1-11 *							1		N	2-1/8	221
GND 05		F05T1		1-12 *											221
GND 05				1										20-3/8	221

RUN NAME	A/P	PIN NAME	ORDER PIN	BAY - ORDER	Q	DRAW OPT	RV	RG	Y	X	Z	REMARKS	NC FLAG	LENGTH EXCEPTIONS	RUN NUMBER
GND 06		A06C2		1-01 *							2		N	1-1/8	222
GND 06		A06J2		1-02 *		D07					1		N	1-5/8	222
GND 06		A06T1		1-03 *							2		N	1-5/8	222
GND 06		B06C2		1-04 *							1		N	2-1/8	222
GND 06		B06T1		1-05 *							2		N	1-3/8	222
GND 06		C06C2		1-06 *							1		N	2-1/8	222
GND 06		C06T1		1-07 *							2		N	1-5/8	222
GND 06		D06C2		1-08 *							1		N	2-1/8	222
GND 06		D06T1		1-09 *							2		N	1-3/8	222
GND 06		E06C2		1-10 *							1		N	2-1/8	222
GND 06		E06T1		1-11 *							2		N	1-5/8	222
GND 06		F06C2		1-12 *							1		N	2-1/8	222
GND 06		F06T1		1-13 *											222
GND 06				1										21-0/8	222
GND 07		A07C2		1-01 *							1		N	2-1/8	223
GND 07		A07T1		1-02 *							2		N	1-3/8	223
GND 07		B07A1		1-03 *		D02					1		N	0-1/8	223
GND 07		B07B1		1-04 *		D02					2		N	3-1/8	223
GND 07		C07C2		1-05 *							1		N	2-1/8	223
GND 07		C07T1		1-06 *							2		N	1-5/8	223
GND 07		D07C2		1-07 *							1		N	2-1/8	223
GND 07		D07T1		1-08 *							2		N	1-3/8	223
GND 07		E07C2		1-09 *							1		N	2-1/8	223
GND 07		E07T1		1-10 *							2		N	1-5/8	223
GND 07		F07C2		1-11 *							1		N	2-1/8	223
GND 07		F07T1		1-12 *											223
GND 07				1										19-7/8	223
GND 08		A08C2		1-01 *							1		N	2-1/8	224
GND 08		A08T1		1-02 *							2		N	1-5/8	224
GND 08		B08C2		1-03 *							1		N	2-1/8	224
GND 08		B08T1		1-[illegible] *							2		N	1-3/8	224
GND 08		C08C2		1-05 *							1		N	2-1/8	224
GND 08		C08T1		1-06 *							2		N	1-5/8	224
GND 08		D08C2		1-07 *							1		N	2-1/8	224
GND 08		D08T1		1-08 *							2		N	1-3/8	224
GND 08		E08C2		1-09 *							1		N	2-1/8	224
GND 08		E08T1		1-10 *							2		N	1-5/8	224
GND 08		F08C2		1-11 *							1		N	1-2/8	224
GND 08		F08K2		1-12 *		D05- 3					2	EXT A BAUD	N	1-1/8	224
GND 08		F08R2		1-13 *		D05- 3					1	EXT B BAUD	N	0-4/8	224
GND 08		F08T1		1-14 *							2		N	0-4/8	224
GND 08		F08V1		1-15 *		D05- 3						Z0 BAUD			224
GND 08				1										21-5/8	224

RUN NAME	A/P	PIN NAME	ORDER PIN	BAY - ORDER	Q	DRAW OPT	RV	RG	Y	X	Z	REMARKS	NC FLAG	LENGTH EXCEPTIONS	RUN NUMBER
GND 09		A09B2		1-01 *		D10					1		N	0-1/8	225
GND 09		A09C2		1-02 *		D10					2		N	1-5/8	225
GND 09		A09N1		1-03 *		D10					1		N	0-1/8	225
GND 09		A09P1		1-04 *		D10					2		N	0-1/8	225
GND 09		A09R1		1-05 *		D10					1		N	0-1/8	225
GND 09		A09S1		1-06 *		D10					2		N	0-1/8	225
GND 09		A09T1		1-07 *							1		N	0-4/8	225
GND 09		A09V2		1-08 *		D10					2		N	1-2/8	225
GND 09		B09B2		1-09 *		D10					1		N	0-1/8	225
GND 09		B09C2		1-10 *		D10					2		N	0-1/8	225
GND 09		B09D1		1-11 *		D10					1		N	0-1/8	225
GND 09		B09E1		1-12 *		D10					2		N	1-7/8	225
GND 09		B09T1		1-13 *		D10					1		N	0-4/8	225
GND 09		B09V2		1-14 *		D10					2		N	1-1/8	225
GND 09		C09C2		1-15 *							1		N	2-1/8	225
GND 09		C09S1		1-16 *		D01- 1					2	BP BIT IS DATA	*951	5/8	225
GND 09		C09T1		1-17 *							1		N	1-5/8	225
GND 09		D09C2		1-18 *							2		N	2-1/8	225
GND 09		D09T1		1-19 *							1		N	1-3/8	225
GND 09		E09C2		1-20 *							2		N	2-1/8	225
GND 09		E09T1		1-21 *							1		N	1-5/8	225
GND 09		F09C2		1-22 *							2		N	2-1/8	225
GND 09		F09T1		1-23 *											225
GND 09				1										295-5/8	225
GROUP 0-7	H	D02R2		1-01 *		D09					1		N	0-1/8	226
GROUP 0-7	H	D02S2		1-02 *		D09					2		N	0-4/8	226
GROUP 0-7	H	D02U1		1-03 *		D09					1		N	0-1/8	226
GROUP 0-7	H	D02V1		1-04 *		D09					2		N	2-3/8	226
GROUP 0-7	H	E02P1		1-05 *		D09									226
GROUP 0-7	H			1										3-1/8	226
GROUP 0-15	H	D01R2		1-01 *		D09					1		N	0-1/8	227
GROUP 0-15	H	D01S2		1-02 *		D09					2		N	0-4/8	227
GROUP 0-15	H	D01U1		1-03 *		D09					1		N	0-1/8	227
GROUP 0-15	H	D01V1		1-04 *		D09					2		N	1-7/8	227
GROUP 0-15	H	E02F1		1-05 *		D09					1		N	4-7/8	227
GROUP 0-15	H	F02V2		1-06 *		D09									227
GROUP 0-15	H			1										7-4/8	227
HALF DUPLEX 00	H	E05B1		1-01 *		D11- 4					1		N	2	228
HALF DUPLEX 00	H	E08B1		1-02 *		D05- 1									228
HALF DUPLEX 00	H			1										2-0/8	228
HALF DUPLEX 01	H	D05K2		1-01 *		D11- 4					1		N	2	229
HALF DUPLEX 01	H	D08K2		1-02 *		D05- 1									229
HALF DUPLEX 01	H			1										2-0/8	229
HALF DUPLEX 02	H	D05D2		1-01 *		D11- 4					1		N	2	230
HALF DUPLEX 02	H	D08D2		1-02 *		D05- 1									230
HALF DUPLEX 02	H			1										2-0/8	230
HALF DUPLEX 03	H	C05R2		1-01 *		D11- 4					1		N	2	231
HALF DUPLEX 03	H	C08R2		1-02 *		D05- 1									231
HALF DUPLEX 03	H			1										2-0/8	231

RUN NAME	A/P	PIN NAME	ORDER PIN	BAY - ORDER	Q	DRAW OPT	RV	RG	Y	X	Z	REMARKS	NC FLAG	LENGTH	EXCEPTIONS	RUN NUMBER
HALF DUPLEX 04	H	B05F2		1-01	*	D11- 4					1		N	2		232
HALF DUPLEX 04	H	B00F2		1-02	*	D05- 2										232
HALF DUPLEX 04	H			1										2-0/8		232
HALF DUPLEX 05	H	B05C1		1-01	*	D11- 4					1		N	2		233
HALF DUPLEX 05	H	B00C1		1-02	*	D05- 2										233
HALF DUPLEX 05	H			1										2-0/8		233
HALF DUPLEX 06	H	A05P2		1-01	*	D11- 4					1		N	2		234
HALF DUPLEX 06	H	A00P2		1-02	*	D05- 2										234
HALF DUPLEX 06	H			1										2-0/8		234
HALF DUPLEX 07	H	A05B1		1-01	*	D11- 4					1		N	2		235
HALF DUPLEX 07	H	A00B1		1-02	*	D05- 2										235
HALF DUPLEX 07	H			1										2-0/8		235
HALF DUPLEX 08	H	D05U2		1-01	*	D11- 4					1		N	2		236
HALF DUPLEX 08	H	D00U2		1-02	*	D05- 3										236
HALF DUPLEX 08	H			1										2-0/8		236
HALF DUPLEX 09	H	D05M2		1-01	*	D11- 4					1		N	2		237
HALF DUPLEX 09	H	D00M2		1-02	*	D05- 3										237
HALF DUPLEX 09	H			1										2-0/8		237
HALF DUPLEX 10	H	D05E2		1-01	*	D11- 4					1		N	2		238
HALF DUPLEX 10	H	D00E2		1-02	*	D05- 3										238
HALF DUPLEX 10	H			1										2-0/8		238
HALF DUPLEX 11	H	C05S2		1-01	*	D11- 4					1		N	2		239
HALF DUPLEX 11	H	C00S2		1-02	*	D05- 3										239
HALF DUPLEX 11	H			1										2-0/8		239
HALF DUPLEX 12	H	B05H1		1-01		D11- 4					1		N	2		240
HALF DUPLEX 12	H	B00H1		1-02	*	D05- 4										240
HALF DUPLEX 12	H			1										2-0/8		240
HALF DUPLEX 13	H	A05U2		1-01	*	D11- 4					1		N	2		241
HALF DUPLEX 13	H	A00U2		1-02	*	D05- 4										241
HALF DUPLEX 13	H			1										2-0/8		241
HALF DUPLEX 14	H	A05L2		1-01	*	D11- 4					1		N	2		242
HALF DUPLEX 14	H	A00L2		1-02	*	D05- 4										242
HALF DUPLEX 14	H			1										2-0/8		242
HALF DUPLEX 15	H	A05F1		1-01	*	D11- 4					1		N	2		243
HALF DUPLEX 15	H	A00F1		1-02	*	D05- 4										243
HALF DUPLEX 15	H			1										2-0/8		243
IN HIGH	H	E01M1		1-01	*	D09					1		N	3-1/8		244
IN HIGH	H	F02E2		1-02	*	D09										244
IN HIGH	H			1										3-1/8		244
INH CLOCK	L	F02H2				D09									1-PIN RUN	245

RUN NAME	A/P	PIN NAME	ORDER PIN	BAY - ORDER	Q	DRAW OPT	RV	RG	Y	X	Z	REMARKS	NC FLAG	LENGTH	EXCEPTIONS	RUN NUMBER
INIT A	H	F04F2		1-01	*	D13- 1					1		N	6-3/8		246
INIT A	H	F00T2		1-02	*	D05- 1										246
INIT A	H			1										6-3/8		246
INIT A	L	F04R2				D13- 1									1-PIN RUN	247
INIT B	H	B02J1		1-01	*	D07					1		N	5-7/8		248
INIT B	H	D03D2		1-02	*	D12- 1					2		N	3-7/8		248
INIT B	H	E05F1		1-03	*	D11- 1					1		N	4-7/8		248
INIT B	H	F04V2		1-04	*	D13- 1										248
INIT B	H			1										14-5/8		248
INIT B	L	D09L2		1-01	*	D01- 2					1		N	1-5/8		249
INIT B	L	D07N2		1-02	*	D08- 2					2		N	1		249
INIT B	L	D06N2		1-03	*	D03- 2					1		N	6-5/8		249
INIT B	L	F04M2		1-04	*	D13- 1										249
INIT B	L			1										9-2/8		249
INT ENB A	H	F01D2		1-01	*	D09					2		N	0-5/8		250
INT ENB A	H	F01H2		1-02	*	D09					1		N	0-4/8		250
INT ENB A	H	F01K2		1-03	*	D09					2		N	1-2/8		250
INT ENB A	H	F02N2		1-04	*	D09										250
INT ENB A	H			1										2-3/8		250
INTR DONE B	H	F01M2		1-01	*	D09					1		N	1		251
INTR DONE B	H	F01S1		1-02	*	D09										251
INTR DONE B	H			1										1-0/8		251
INTR TEST	H	F02M1				D09									1-PIN RUN	252
LD HOLD	H	F02P1		1-01	*	D09					1		N	1-1/8		253
LD HOLD	H	F02V1		1-02	*	D09										253
LD HOLD	H			1										1-1/8		253
LINE CNT +	H	D01L2		1-01	*	D09					2		N	1		254
LINE CNT +	H	D02L2		1-02	*	D09					1		N	3-1/8		254
LINE CNT +	H	E02L1		1-03	*	D09					2		N	4-1/8		254
LINE CNT +	H	F02U1		1-04	*	D09										254
LINE CNT +	H			1										8-2/8		254
LINE CNT LSB	H	D01M2		1-01	*	D09					2		N	1		255
LINE CNT LSB	H	D02M2		1-02	*	D09					1		N	3-1/8		255
LINE CNT LSB	H	E02M1		1-03	*	D09					2		N	3-6/8		255
LINE CNT LSB	H	F02S1		1-04	*	D09										255
LINE CNT LSB	H			1										7-7/8		255
LINE CNT MSB	H	D01K2		1-01	*	D09					2		N	1		256
LINE CNT MSB	H	D02K2		1-02	*	D09					1		N	3-3/8		256
LINE CNT MSB	H	E02N1		1-03	*	D09					2		N	3-7/8		256
LINE CNT MSB	H	F02U2		1-04	*	D09										256
LINE CNT MSB	H			1										8-2/8		256
LINE INCR	H	F02N1				D09									1-PIN RUN	257

RUN NAME	A/P	PIN NAME	ORDER PIN	BAY - ORDER	Q	DRAW OPT	RV	RG	Y	X	Z	REMARKS	NC FLAG	LENGTH	EXCEPTIONS	RUN NUMBER
LOAD BAR LB+HB	L	C04N2		1-01 *		D13- 1					1		N	8-3/8		258
LOAD BAR LB+HB	L	F03J2		1-02 *		D12- 2										258
LOAD BAR LB+HB	L			1										8-3/8		258
LOAD BC	H	C03J1		1-01 *		D12- 1					1		N	10-1/8		259
LOAD BC	H	F04U2		1-02 *		D13- 1										259
LOAD BC	H			1										10-1/8		259
LOAD BCR	H	D03U2		1-01 *		D12- 2					1		N	5-7/8		260
LOAD BCR	H	F04U1		1-02 *		D13- 1										260
LOAD BCR	H			1										5-7/8		260
LOAD LPR	H	E03J2		1-01 *		D12- 2					1		N	1-2/8		261
LOAD LPR	H	E04P2		1-02 *		D13- 1										261
LOAD LPR	H			1										1-2/8		261
LOAD PULSE	L	D09K2		1-01 *		D01- 2					1		N	6-7/8		262
LOAD PULSE	L	F05A1		1-02 *		D11- 1										262
LOAD PULSE	L			1										6-7/8		262
LOAD REQ (0)	H	D09V2				D01- 2									1-PIN RUN	263
LOAD SCR HIGH BYTE	H	C04P1		1-01 *		D13- 1					1		N	8-7/8		264
LOAD SCR HIGH BYTE	H	F05N1		1-02 *		D11- 2										264
LOAD SCR HIGH BYTE	H			1										8-7/8		264
LOAD SCR LOW BYTE	H	B05N1		1-01 *		D11- 2					1		N	3-5/8		265
LOAD SCR LOW BYTE	H	C04T2		1-02 *		D13- 1										265
LOAD SCR LOW BYTE	H			1										3-5/8		265
LOAD SILO	L	A05J2		1-01 *		D11- 1					1		N	10-3/8		266
LOAD SILO	L	D09J2		1-02 *		D01- 2										266
LOAD SILO	L			1										10-3/8		266
LOAD SSR HIGH BYTE	H	C04P2		1-01 *		D13- 1					1		N	4-3/8		267
LOAD SSR HIGH BYTE	H	D03U1		1-02 *		D12- 3										267
LOAD SSR HIGH BYTE	H			1										4-3/8		267
LOAD SSR LOW BYTE	H	C04R1		1-01 *		D13- 1					1		N	6-3/8		268
LOAD SSR LOW BYTE	H	E03S1		1-02 *		D12- 2										268
LOAD SSR LOW BYTE	H			1										6-3/8		268
LPR 03	H	F03M1				D12- 2									1-PIN RUN	269
LPR 06	L	E03K2		1-01 *		D12- 2					1		N	4-3/8		270
LPR 06	L	F08L2		1-02 *		D05- 1										270
LPR 06	L			1										4-3/8		270
LPR 07	L	E03R1		1-01 *		D12- 2					1		N	4-3/8		271
LPR 07	L	F08S2		1-02 *		D05- 1										271
LPR 07	L			1										4-3/8		271
LPR 08	L	C03L2		1-01 *		D12- 3					1		N	11-1/8		272
LPR 08	L	F08N2		1-02 *		D05- 1										272
LPR 08	L			1										11-1/8		272

RUN NAME	A/P	PIN NAME	ORDER PIN	BAY - ORDER	Q	DRAW OPT	RV	RG	Y	X	Z	REMARKS	NC FLAG	LENGTH	EXCEPTIONS	RUN NUMBER
LPR 09	L	C03K2		1-01 *		D12- 3					1		N	11-1/8		273
LPR 09	L	F08M2		1-02 *		D05- 1										273
LPR 09	L			1										11-1/8		273
LPR 10	L	C03K1		1-01 *		D12- 3					1		N	11-1/8		274
LPR 10	L	F08J2		1-02 *		D05- 1										274
LPR 10	L			1										11-1/8		274
LPR 11	L	C03L1		1-01 *		D12- 3					1		N	10-5/8		275
LPR 11	L	F08M2		1-02 *		D05- 1										275
LPR 11	L			1										10-5/8		275
LPR 12	L	D03S2		1-01 *		D12- 3					1		N	6-7/8		276
LPR 12	L	F08E2		1-02 *		D05- 1										276
LPR 12	L			1										6-7/8		276
LPR 13	L	E03H1		1-01 *		D12- 3					1		N	4-3/8		277
LPR 13	L	F08F2		1-02 *		D05- 1										277
LPR 13	L			1										4-3/8		277
LPR 14	L	E03K1		1-01 *		D12- 3					1		N	5-2/8		278
LPR 14	L	F08H1		1-02 *		D05- 1										278
LPR 14	L			1										5-2/8		278
LPR 15	L	E03J1		1-01 *		D12- 3					1		N	5-4/8		279
LPR 15	L	F08P2		1-02 *		D05- 1										279
LPR 15	L			1										5-4/8		279
MASTER B	L	F01P2		1-01 *		D09					2		N	0-1/8		280
MASTER B	L	F01R2		1-02 *		D09					1		N	0-1/8		280
MASTER B	L	F01S2		1-03 *		D09										280
MASTER B	L			1										0-2/8		280
MASTER NPR	L	A02N1		1-01 *		D07					2		N	2-5/8		281
MASTER NPR	L	B02H2		1-02 *		D07					1		N	0-4/8		281
MASTER NPR	L	B02H1		1-03 *		D07										281
MASTER NPR	L			1										3-1/8		281
MEM ADD A	H	C03A1		1-01 *		D12- 1					1		N	5-1/8		282
MEM ADD A	H	D04N1		1-02 *		D13- 2										282
MEM ADD A	H			1										5-1/8		282
MEM ADD B	H	B03U1		1-01 *		D12- 1					1		N	5-7/8		283
MEM ADD B	H	D04N2		1-02 *		D13- 2										283
MEM ADD B	H			1										5-7/8		283
MEM ADD C	H	B03U2		1-01 *		D12- 1					1		N	5-3/8		284
MEM ADD C	H	D04P1		1-02 *		D13- 2										284
MEM ADD C	H			1										5-3/8		284
MEM ADD D	H	B03J2		1-01 *		D12- 1					1		N	6-1/8		285
MEM ADD D	H	D04M1		1-02 *		D13- 2										285
MEM ADD D	H			1										6-1/8		285

RUN NAME	A/P	PIN NAME	ORDER PIN	BAY - ORDER	Q	DRAW OPT	RV	RG	Y	X	Z	REMARKS	NC FLAG	LENGTH EXCEPTIONS	RUN NUMBER
MUX CARRIER	L	D01B1		1-01	*	D09					2		N	1	286
MUX CARRIER	L	D02B1		1-02	*	D09					1		N	2-7/8	286
MUX CARRIER	L	E02A1		1-03	*	D09									286
MUX CARRIER	L			1										3-7/8	286
MUX CLEAR TO SEND	L	D01C1		1-01	*	D09					2		N	1	287
MUX CLEAR TO SEND	L	D02C1		1-02	*	D09					1		N	3-1/8	287
MUX CLEAR TO SEND	L	E02D1		1-03	*	D09									287
MUX CLEAR TO SEND	L			1										4-1/8	287
MUX LINE EN	L	D01K1		1-01	*	D09					2		N	1	288
MUX LINE EN	L	D02K1		1-02	*	D09					1		N	3-5/8	288
MUX LINE EN	L	E02P2		1-03	*	D09									288
MUX LINE EN	L			1										4-5/8	288
MUX LINE EN 1	H	D01N2		1-01	*	D09					2		N	0-5/8	289
MUX LINE EN 1	H	D01S1		1-02	*	D09					1		N	0-5/8	289
MUX LINE EN 1	H	D01V2		1-03	*	D09									289
MUX LINE EN 1	H			1										1-2/8	289
MUX LINE EN 2	H	D02N2		1-01	*	D09					2		N	0-5/8	290
MUX LINE EN 2	H	D02S1		1-02	*	D09					1		N	0-5/8	290
MUX LINE EN 2	H	D02V2		1-03	*	D09									290
MUX LINE EN 2	H			1										1-2/8	290
MUX RING	L	D02F2		1-01	*	D09					2		N	1	291
MUX RING	L	D01F2		1-02	*	D09					1		N	2-5/8	291
MUX RING	L	E02C1		1-03	*	D09									291
MUX RING	L			1										3-5/8	291
MUX RQ TO SEND	L	D01H1		1-01	*	D09					2		N	1	292
MUX RQ TO SEND	L	D02H1		1-02	*	D09					1		N	3-7/8	292
MUX RQ TO SEND	L	E02N2		1-03	*	D09									292
MUX RQ TO SEND	L			1										4-7/8	292
MUX SEC RX	L	D01A1		1-01	*	D09					2		N	1	293
MUX SEC RX	L	D02A1		1-02	*	D09					1		N	3-1/8	293
MUX SEC RX	L	E02B1		1-03	*	D09									293
MUX SEC RX	L			1										4-1/8	293
MUX SEC TX	L	D01L1		1-01	*	D09					2		N	1	294
MUX SEC TX	L	D02L1		1-02	*	D09					1		N	3-5/8	294
MUX SEC TX	L	E02R2		1-03	*	D09									294
MUX SEC TX	L			1										4-5/8	294
MUX TERM RDY	L	D01F1		1-01	*	D09					2		N	1	295
MUX TERM RDY	L	D02F1		1-02	*	D09					1		N	4-1/8	295
MUX TERM RDY	L	E02S2		1-03	*	D09									295
MUX TERM RDY	L			1										5-1/8	295

RUN NAME	A/P	PIN NAME	ORDER PIN	BAY - ORDER	Q	DRAW OPT	RV	RG	Y	X	Z	REMARKS	NC FLAG	LENGTH EXCEPTIONS	RUN NUMBER
NB1 LPR 00	H	C06F2		1-01	*	D03- 5					2		N	1	296
NB1 LPR 00	H	C07F2		1-02	*	D04- 5					1		N	1-6/8	296
NB1 LPR 00	H	C07T2		1-03	*	D04- 3					2		N	1	296
NB1 LPR 00	H	C06T2		1-04	*	D03- 3					1		N	2-1/8	296
NB1 LPR 00	H	D07H1		1-05	*	D04- 4					2		N	1	296
NB1 LPR 00	H	D06H1		1-06	*	D03- 4					1		N	1-7/8	296
NB1 LPR 00	H	D06U2		1-07	*	D03- 4					2		N	1	296
NB1 LPR 00	H	D07U2		1-08	*	D04- 4					1		N	1-7/8	296
NB1 LPR 00	H	E07J1		1-09	*	D04- 2					2		N	1	296
NB1 LPR 00	H	F06J1		1-10	*	D03- 2					1		N	1-5/8	296
NB1 LPR 00	H	E06U1		1-11	*	D03- 3					2		N	1	296
NB1 LPR 00	H	F07U1		1-12	*	D04- 3					1		N	1-7/8	296
NB1 LPR 00	H	F06F2		1-13	*	D03- 5					2		N	1	296
NB1 LPR 00	H	F07F2		1-14	*	D04- 5					1		N	1-6/8	296
NB1 LPR 00	H	F07T2		1-15	*	D04- 2					2		N	1	296
NB1 LPR 00	H	F06T2		1-16	*	D03- 2					1		N	2-6/8	296
NB1 LPR 00	H	F03H2		1-17	*	D12- 2									296
NB1 LPR 00	H			1										23-5/8	296
NB2 LPR 01	H	C07E1		1-01	*	D04- 5					2		N	1	297
NB2 LPR 01	H	C06E1		1-02	*	D03- 5					1		N	1-6/8	297
NB2 LPR 01	H	C06S1		1-03	*	D03- 3					2		N	1	297
NB2 LPR 01	H	C07S1		1-04	*	D04- 3					1		N	2-1/8	297
NB2 LPR 01	H	D06F2		1-05	*	D03- 4					2		N	1	297
NB2 LPR 01	H	D07F2		1-06	*	D04- 4					1		N	2-1/8	297
NB2 LPR 01	H	D07U1		1-07	*	D04- 4					2		N	1	297
NB2 LPR 01	H	D06U1		1-08	*	D03- 4					1		N	1-7/8	297
NB2 LPR 01	H	E06H2		1-09	*	D03- 2					2		N	1	297
NB2 LPR 01	H	E07H2		1-10	*	D04- 2					1		N	1-5/8	297
NB2 LPR 01	H	E07T2		1-11	*	D04- 3					2		N	1	297
NB2 LPR 01	H	E06T2		1-12	*	D03- 3					1		N	2-1/8	297
NB2 LPR 01	H	F07F1		1-13	*	D04- 5					2		N	1-5/8	297
NB2 LPR 01	H	F07S2		1-14	*	D04- 2					1		N	1	297
NB2 LPR 01	H	F06S2		1-15	*	D03- 2					2		N	1-5/8	297
NB2 LPR 01	H	F06F1		1-16	*	D03- 5					1		N	2-1/8	297
NB2 LPR 01	H	F03H1		1-17	*	D12- 2									297
NB2 LPR 01	H			1										24-0/8	297
NRC 00	H	C09A1		1-01	*	D01- 2					1		N	5-2/8	298
NRC 00	H	D03F1		1-02	*	D12- 2									298
NRC 00	H			1										5-2/8	298
NRC 01	H	C09B1		1-01	*	D01- 2					1		N	8-5/8	299
NRC 01	H	E03D2		1-02	*	D12- 2									299
NRC 01	H			1										8-5/8	299
NRC 02	H	C09C1		1-01	*	D01- 2					1		N	9-3/8	300
NRC 02	H	E03M2		1-02	*	D12- 2									300
NRC 02	H			1										9-3/8	300
NRC 03	H	C09D1		1-01	*	D01- 2					1		N	10-3/8	301
NRC 03	H	E03U1		1-02	*	D12- 2									301
NRC 03	H			1										10-3/8	301

RUN NAME	A/P	PIN NAME	ORDER PIN	BAY - ORDER	Q	DRAW OPT	RV	RG	Y	X	Z	REMARKS	NC FLAG	LENGTH EXCEPTIONS	RUN NUMBER
NRC 04	H	C09E1		1-01	*	D01- 2					1		N	4-6/8	302
NRC 04	H	D03J1		1-02	*	D12- 2									302
NRC 04	H			1										4-6/8	302
NRC 05	H	C09F1		1-01	*	D01- 2					1		N	6-3/8	303
NRC 05	H	E03A1		1-02	*	D12- 2									303
NRC 05	H			1										6-3/8	303
NRC 06	H	C09H1		1-01	*	D01- 2					1		N	8-7/8	304
NRC 06	H	E03N2		1-02	*	D12- 2									304
NRC 06	H			1										8-7/8	304
NRC 07	H	C09J1		1-01	*	D01- 2					1		N	10-7/8	305
NRC 07	H	F03C1		1-02	*	D12- 2									305
NRC 07	H			1										10-7/8	305
NRC 08	H	C03P2		1-01	*	D12- 3					1		N	4-5/8	306
NRC 08	H	D09C1		1-02	*	D01- 2									306
NRC 08	H			1										4-5/8	306
NRC 09	H	C03D1		1-01	*	D12- 3					1		N	4-5/8	307
NRC 09	H	D09D1		1-02	*	D01- 2									307
NRC 09	H			1										4-5/8	307
NRC 10	H	B03L2		1-01	*	D12- 3					1		N	7-5/8	308
NRC 10	H	D09E1		1-02	*	D01- 2									308
NRC 10	H			1										7-5/8	308
NRC 11	H	A03U1		1-01	*	D12- 3					1		N	10-1/8	309
NRC 11	H	D09F1		1-02	*	D01- 2									309
NRC 11	H			1										10-1/8	309
NRC 12	H	B03D2		1-01	*	D12- 3					1		N	5-4/8	310
NRC 12	H	C09M1		1-02	*	D01- 2									310
NRC 12	H			1										5-4/8	310
NRC 13	H	B03N2		1-01	*	D12- 3					1		N	4-2/8	311
NRC 13	H	C09N1		1-02	*	D01- 2									311
NRC 13	H			1										4-2/8	311
NRC 14	H	C03F1		1-01	*	D12- 3					1		N	4-1/8	312
NRC 14	H	C09P1		1-02	*	D01- 2									312
NRC 14	H			1										4-1/8	312
NRC 15	H	C03P1		1-01	*	D12- 3					1		N	5-1/8	313
NRC 15	H	D09L1		1-02	*	D01- 2									313
NRC 15	H			1										5-1/8	313

RUN NAME	A/P	PIN NAME	ORDER PIN	BAY - ORDER	Q	DRAW OPT	RV	RG	Y	X	Z	REMARKS	NC FLAG	LENGTH EXCEPTIONS	RUN NUMBER
NSB LPR 02	H	C06E2		1-01	*	D03- 5					2		N	1	314
NSB LPR 02	H	C07E2		1-02	*	D04- 5					1		N	1-6/8	314
NSB LPR 02	H	C07S2		1-03	*	D04- 3					2		N	1	314
NSB LPR 02	H	C06S2		1-04	*	D03- 3					1		N	2-1/8	314
NSB LPR 02	H	D06F1		1-05	*	D03- 4					2		N	1	314
NSB LPR 02	H	D07F1		1-06	*	D04- 4					1		N	1-7/8	314
NSB LPR 02	H	D07T2		1-07	*	D04- 4					2		N	1	314
NSB LPR 02	H	D06T2		1-08	*	D03- 4					1		N	1-6/8	314
NSB LPR 02	H	E06F2		1-09	*	D03- 2					2		N	1	314
NSB LPR 02	H	E07F2		1-10	*	D04- 2					1		N	1-5/8	314
NSB LPR 02	H	E07S2		1-11	*	D04- 3					2		N	1	314
NSB LPR 02	H	E06S2		1-12	*	D03- 3					1		N	2	314
NSB LPR 02	H	F06E2		1-13	*	D03- 5					2		N	1	314
NSB LPR 02	H	F07E2		1-14	*	D04- 5					1		N	1-7/8	314
NSB LPR 02	H	F07S1		1-15	*	D04- 2					2		N	1	314
NSB LPR 02	H	F06S1		1-16	*	D03- 2					1		N	2-5/8	314
NSB LPR 02	H	F03R1		1-17	*	D12- 2									314
NSB LPR 02	H			1										23-5/8	314
OUT LOW	H	D02U2		1-01	*	D09					2		N	1	315
OUT LOW	H	D01U2		1-02	*	D09					1		N	2-3/8	315
OUT LOW	H	E01N1		1-03	*	D09					2		N	3-3/8	315
OUT LOW	H	F02J2		1-04	*	D09									315
OUT LOW	H			1										6-6/8	315
PEN LPR 04	L	C06D1		1-01	*	D03- 5					2		N	1	316
PEN LPR 04	L	C07D1		1-02	*	D04- 5					1		N	1-6/8	316
PEN LPR 04	L	C07R1		1-03	*	D04- 3					2		N	1	316
PEN LPR 04	L	C06R1		1-04	*	D03- 3					1		N	2-1/8	316
PEN LPR 04	L	D06E2		1-05	*	D03- 4					2		N	1	316
PEN LPR 04	L	D07E2		1-06	*	D04- 4					1		N	1-6/8	316
PEN LPR 04	L	D07S2		1-07	*	D04- 4					2		N	1	316
PEN LPR 04	L	D06S2		1-08	*	D03- 4					1		N	1-6/8	316
PEN LPR 04	L	E06E2		1-09	*	D03- 2					2		N	1	316
PEN LPR 04	L	E07E2		1-10	*	D04- 2					1		N	1-5/8	316
PEN LPR 04	L	E07P1		1-11	*	D04- 3					2		N	1	316
PEN LPR 04	L	E06P1		1-12	*	D03- 3					1		N	2-2/8	316
PEN LPR 04	L	F06E1		1-13	*	D03- 5					2		N	1	316
PEN LPR 04	L	F07E1		1-14	*	D04- 5					1		N	1-7/8	316
PEN LPR 04	L	F07R2		1-15	*	D04- 2					2		N	1	316
PEN LPR 04	L	F06R2		1-16	*	D03- 2					1		N	2-5/8	316
PEN LPR 04	L	F03F2		1-17	*	D12- 2									316
PEN LPR 04	L			1										23-6/8	316

RUN NAME	A/P	PIN NAME	ORDER PIN	BAY - ORDER	Q	DRAW OPT	RV RG Y	X	Z	REMARKS	NC FLAG	LENGTH EXCEPTIONS	RUN NUMBER
PEV LPR 05	L	C06F1		1-01 *		D03- 5			2		N	1	317
PEV LPR 05	L	C07F1		1-02 *		D04- 5			1		N	1-7/8	317
PEV LPR 05	L	C07U2		1-03 *		D04- 3			2		N	1	317
PEV LPR 05	L	C06U2		1-04 *		D03- 3			1		N	2	317
PEV LPR 05	L	D06H2		1-05 *		D03- 4			2		N	1	317
PEV LPR 05	L	D07H2		1-06 *		D04- 4			1		N	1-7/8	317
PEV LPR 05	L	D07V1		1-07 *		D04- 4			2		N	1	317
PEV LPR 05	L	D06V1		1-08 *		D03- 4			1		N	1-7/8	317
PEV LPR 05	L	E06J2		1-09 *		D03- 2			2		N	1	317
PEV LPR 05	L	E07J2		1-10 *		D04- 2			1		N	1-5/8	317
PEV LPR 05	L	E07U2		1-11 *		D04- 3			2		N	1	317
PEV LPR 05	L	E06U2		1-12 *		D03- 3			1		N	2-1/8	317
PEV LPR 05	L	F07H1		1-13 *		D04- 5			2		N	1	317
PEV LPR 05	L	F06H1		1-14 *		D03- 5			1		N	1-6/8	317
PEV LPR 05	L	F06U1		1-15 *		D03- 2			2		N	1	317
PEV LPR 05	L	F07U1		1-16 *		D04- 2			1		N	2-7/8	317
PEV LPR 05	L	F03N1		1-17 *		D12- 2							317
PEV LPR 05	L			1								24-0/8	317
RCV DATA ENABLE	H	D05E1		1-01 *		D11- 3			1		N	1-3/8	318
RCV DATA ENABLE	H	D06D2		1-02 *		D03- 2			2		N	1	318
RCV DATA ENABLE	H	D07D2		1-03 *		D04- 2							318
RCV DATA ENABLE	H			1								2-3/8	318
RCV INTR REQ	H	A06U1		1-01 *		D07			1		N	0-1/8	319
RCV INTR REQ	H	A06V1		1-02 *		D07			2		N	0-3/8	319
RCV INTR REQ	H	D05P1		1-03 *		D11- 2							319
RCV INTR REQ	H			1								0-4/8	319
RCV SCAN A	H	D09H1		1-01 *		D01- 1			2		N	2-7/8	320
RCV SCAN A	H	D05P2		1-02 *		D11- 1			1		N	2-7/8	320
RCV SCAN A	H	E06M1		1-03 *		D03- 4			2		N	1	320
RCV SCAN A	H	E07M1		1-04 *		D04- 4							320
RCV SCAN A	H			1								6-6/8	320
RCV SCAN B	H	D09J1		1-01 *		D01- 1			2		N	3-1/8	321
RCV SCAN B	H	D05R1		1-02 *		D11- 1			1		N	2-7/8	321
RCV SCAN B	H	E06K2		1-03 *		D03- 4			2		N	1	321
RCV SCAN B	H	E07K2		1-04 *		D04- 4							321
RCV SCAN B	H			1								7-0/8	321
RCV SCAN C	H	D09H2		1-01 *		D01- 1			1		N	4-1/8	322
RCV SCAN C	H	E07H1		1-02 *		D04- 2			2		N	1	322
RCV SCAN C	H	E06H1		1-03 *		D03- 4			1		N	0-4/8	322
RCV SCAN C	H	E05K2		1-04 *		D11- 1							322
RCV SCAN C	H			1								5-5/8	322
RCV SCAN D	H	D09F2		1-01 *		D01- 1			2		N	2-2/8	323
RCV SCAN D	H	D07N1		1-02 *		D04- 2			1		N	3-3/8	323
RCV SCAN D	H	E05H1		1-03 *		D11- 1							323
RCV SCAN D	H			1								5-5/8	323
RCV SCAN D	L	D06N1		1-01 *		D03- 2			1		N	2-3/8	324
RCV SCAN D	L	E05F2		1-02 *		D11- 1							324
RCV SCAN D	L			1								2-3/8	324

RUN NAME	A/P	PIN NAME	ORDER PIN	BAY - ORDER	Q	DRAW OPT	RV RG Y	X	Z	REMARKS	NC FLAG	LENGTH EXCEPTIONS	RUN NUMBER
READ NRC	H	D09K1		1-01 *		D01- 2			1		N	4-6/8	325
READ NRC	H	E04P1		1-02 *		D13- 1							325
READ NRC	H			1								4-6/8	325
READY IN	L	C09L1		1-01 *		D01- 2			1		N	6-7/8	326
READY IN	L	E05D1		1-02 *		D11- 1							326
READY IN	L			1								6-7/8	326
REQUEST BUS (1)	H	A02U1		1-01 *		D07			1		N	0-1/8	327
REQUEST BUS (1)	H	A02V1		1-02 *		D07			2		N	3-2/8	327
REQUEST BUS (1)	H	B02V1		1-03 *		D07			1		N	2-3/8	327
REQUEST BUS (1)	H	B09R1		1-04 *		D11- 1							327
REQUEST BUS (1)	H			1								5-6/8	327
RESET DA	H	A09H2		1-01 *		D11- 1			1		N	8-7/8	328
RESET DA	H	D06K1		1-02 *		D03- 2			2		N	1	328
RESET DA	H	D07K1		1-03 *		D04- 2							328
RESET DA	H			1								9-7/8	328
RX CLOCK LINE 00	L	E06L1		1-01 *		D03- 2			1		N	1-7/8	329
RX CLOCK LINE 00	L	E08A1		1-02 *		D05- 1							329
RX CLOCK LINE 00	L			1								1-7/8	329
RX CLOCK LINE 01	L	D08R2		1-01 *		D05- 1			1		N	7-1/8	330
RX CLOCK LINE 01	L	F06V2		1-02 *		D03- 2							330
RX CLOCK LINE 01	L			1								7-1/8	330
RX CLOCK LINE 02	L	D08J2		1-01 *		D05- 1			1		N	6-1/8	331
RX CLOCK LINE 02	L	F06A1		1-02 *		D03- 3							331
RX CLOCK LINE 02	L			1								6-1/8	331
RX CLOCK LINE 03	L	C06V2		1-01 *		D03- 3			1		N	1-4/8	332
RX CLOCK LINE 03	L	C08V2		1-02 *		D05- 1							332
RX CLOCK LINE 03	L			1								1-4/8	332
RX CLOCK LINE 04	L	B08M1		1-01 *		D05- 2			1		N	6-1/8	333
RX CLOCK LINE 04	L	D06K2		1-02 *		D03- 4							333
RX CLOCK LINE 04	L			1								6-1/8	333
RX CLOCK LINE 05	L	B08D2		1-01 *		D05- 2			1		N	9-3/8	334
RX CLOCK LINE 05	L	E06D1		1-02 *		D03- 4							334
RX CLOCK LINE 05	L			1								9-3/8	334
RX CLOCK LINE 06	L	A08R2		1-01 *		D05- 2			1		N	14-3/8	335
RX CLOCK LINE 06	L	F06K1		1-02 *		D03- 5							335
RX CLOCK LINE 06	L			1								14-3/8	335
RX CLOCK LINE 07	L	A08J2		1-01 *		D05- 2			1		N	6-7/8	336
RX CLOCK LINE 07	L	C06J1		1-02 *		D03- 5							336
RX CLOCK LINE 07	L			1								6-7/8	336
RX CLOCK LINE 08	L	D08V2		1-01 *		D05- 3			1		N	2-5/8	337
RX CLOCK LINE 08	L	E07L1		1-02 *		D04- 2							337
RX CLOCK LINE 08	L			1								2-5/8	337

RUN NAME	A/P	PIN NAME	ORDER PIN	BAY - ORDER	Q	DRAW OPT	RV	RG	Y	X	Z	REMARKS	NC FLAG	LENGTH EXCEPTIONS	RUN NUMBER
RX CLOCK LINE 09	L	D08P2		1-01 *		D05- 3					1		N	6-5/8	338
RX CLOCK LINE 09	L	F07V2		1-02 *		D04- 2									338
RX CLOCK LINE 09	L			1										6-5/8	338
RX CLOCK LINE 10	L	D08H2		1-01 *		D05- 3					1		N	5-5/8	339
RX CLOCK LINE 10	L	F07A1		1-02 *		D04- 3									339
RX CLOCK LINE 10	L			1										5-5/8	339
RX CLOCK LINE 11	L	C07V2		1-01 *		D04- 3					1		N	0-5/8	340
RX CLOCK LINE 11	L	C08U2		1-02 *		D05- 3									340
RX CLOCK LINE 11	L			1										0-5/8	340
RX CLOCK LINE 12	L	B08K2		1-01 *		D05- 4					1		N	6-1/8	341
RX CLOCK LINE 12	L	D07K2		1-02 *		D04- 4									341
RX CLOCK LINE 12	L			1										6-1/8	341
RX CLOCK LINE 13	L	B08B1		1-01 *		D05- 4					1		N	8-7/8	342
RX CLOCK LINE 13	L	E07D1		1-02 *		D04- 4									342
RX CLOCK LINE 13	L			1										8-7/8	342
RX CLOCK LINE 14	L	A08N2		1-01 *		D05- 4					1		N	14-1/8	343
RX CLOCK LINE 14	L	F07K1		1-02 *		D04- 5									343
RX CLOCK LINE 14	L			1										14-1/8	343
RX CLOCK LINE 15	L	A08H2		1-01 *		D05- 4					1		N	6-3/8	344
RX CLOCK LINE 15	L	C07J1		1-02 *		D04- 5									344
RX CLOCK LINE 15	L			1										6-3/8	344
SCR 00	H	B05D1		1-01 *		D11- 2					1		N	6-5/8	345
SCR 00	H	D03F2		1-02 *		D12- 2					2		N	3-1/8	345
SCR 00	H	E04F1		1-03 *		D13- 2									345
SCR 00	H			1										9-6/8	345
SCR 01	H	B05A1		1-01 *		D11- 2					1		N	8-7/8	346
SCR 01	H	E04E2		1-02 *		D13- 2					2		N	1-3/8	346
SCR 01	H	E03C1		1-03 *		D12- 2									346
SCR 01	H			1										10-2/8	346
SCR 02	H	A05V1		1-01 *		D11- 2					1		N	9-3/8	347
SCR 02	H	E04D2		1-02 *		D13- 2					2		N	1-3/8	347
SCR 02	H	E03L2		1-03 *		D12- 2									347
SCR 02	H			1										10-6/8	347
SCR 03	H	A05R1		1-01 *		D11- 2					1		N	10-3/8	348
SCR 03	H	E04E1		1-02 *		D13- 2					2		N	1-7/8	348
SCR 03	H	E03S2		1-03 *		D12- 2									348
SCR 03	H			1										12-2/8	348
SCR 04	H	B05P1		1-01 *		D11- 2					2		N	2-3/8	349
SCR 04	H	C04E1		1-02 *		D13- 2					1		N	3-5/8	349
SCR 04	H	D03H2		1-03 *		D12- 2									349
SCR 04	H			1										6-0/8	349

RUN NAME	A/P	PIN NAME	ORDER PIN	BAY - ORDER	Q	DRAW OPT	RV	RG	Y	X	Z	REMARKS	NC FLAG	LENGTH EXCEPTIONS	RUN NUMBER
SCR 05	H	B05S1		1-01 *		D11- 2					2		N	1-5/8	350
SCR 05	H	C04D2		1-02 *		D13- 2					1		N	6-1/8	350
SCR 05	H	E03B1		1-03 *		D12- 2									350
SCR 05	H			1										7-6/8	350
SCR 06	H	C05F1		1-01 *		D11- 2					1		N	7-3/8	351
SCR 06	H	E03R2		1-02 *		D12- 2									351
SCR 06	H			1										7-3/8	351
SCR 07	H	D05R1		1-01 *		D11- 2					1		N	6-7/8	352
SCR 07	H	F03D1		1-02 *		D12/ 2									352
SCR 07	H			1										6-7/8	352
SCR 08	H	C03T2		1-01 *		D12- 3					1		N	7-1/8	353
SCR 08	H	E05U1		1-02 *		D11- 2									353
SCR 08	H			1										7-1/8	353
SCR 09	H	C03E1		1-01 *		D12- 3					1		N	10-5/8	354
SCR 09	H	F05N2		1-02 *		D11- 2									354
SCR 09	H			1										10-5/8	354
SCR 10	H	B03L1		1-01 *		D12- 3					1		N	11-7/8	355
SCR 10	H	F05L1		1-02 *		D11- 2									355
SCR 10	H			1										11-7/8	355
SCR 11	H	B03A1		1-01 *		D12- 3					1		N	10-1/8	356
SCR 11	H	E04L2		1-02 *		D13- 1					2		N	3-3/8	356
SCR 11	H	F05K2		1-03 *		D11- 2									356
SCR 11	H			1										13-4/8	356
SCR 12	H	B03B1		1-01 *		D12- 3					1		N	12-3/8	357
SCR 12	H	F05H1		1-02 *		D11- 2									357
SCR 12	H			1										12-3/8	357
SCR 13	H	B03M2		1-01 *		D12- 3					1		N	11-3/8	358
SCR 13	H	F05H2		1-02 *		D11- 2									358
SCR 13	H			1										11-3/8	358
SCR 14	H	C03E2		1-01 *		D12- 3					1		N	5-1/8	359
SCR 14	H	D05S1		1-02 *		D11- 2									359
SCR 14	H			1										5-1/8	359
SCR 15	H	C03N1		1-01 *		D12- 3					1		N	9-7/8	360
SCR 15	H	F05R2		1-02 *		D11- 2									360
SCR 15	H			1										9-7/8	360
SELECT 00	H	E01S2		1-01 *		D09					1		N	2-5/8	361
SELECT 00	H	F02F2		1-02 *		D09									361
SELECT 00	H			1										2-5/8	361
SELECT 02	H	D02T2		1-01 *		D09					2		N	1	362
SELECT 02	H	D01T2		1-02 *		D09					1		N	3	362
SELECT 02	H	E01T2		1-03 *		D09					2		N	2-7/8	362
SELECT 02	H	F02L2		1-04 *		D09									362
SELECT 02	H			1										6-7/8	362

RUN NAME	A/P	PIN NAME	ORDER PIN	BAY - ORDER	Q	DRAW OPT	RV	RG	Y	X	Z	REMARKS	NC FLAG	LENGTH EXCEPTIONS	RUN NUMBER
SERIAL IN 00	H	E05L2		1-01 *		D11- 4					1		N	1	363
SERIAL IN 00	H	E06L2		1-02 *		D03- 2									363
SERIAL IN 00	H			1										1-0/8	363
SERIAL IN 01	H	F05V1		1-01 *		D11- 4					1		N	1	364
SERIAL IN 01	H	F06V1		1-02 *		D03- 2									364
SERIAL IN 01	H			1										1-0/8	364
SERIAL IN 02	H	E05V2		1-01 *		D11- 4					1		N	1	365
SERIAL IN 02	H	E06V2		1-02 *		D03- 3									365
SERIAL IN 02	H			1										1-0/8	365
SERIAL IN 03	H	C05V1		1-01 *		D11- 4					1		N	1	366
SERIAL IN 03	H	C06V1		1-02 *		D03- 3									366
SERIAL IN 03	H			1										1-0/8	366
SERIAL IN 04	H	D05L1		1-01 *		D11- 4					1		N	1	367
SERIAL IN 04	H	D06L1		1-02 *		D03- 4									367
SERIAL IN 04	H			1										1-0/8	367
SERIAL IN 05	H	E05E1		1-01 *		D11- 4					1		N	1	368
SERIAL IN 05	H	E06E1		1-02 *		D03- 4									368
SERIAL IN 05	H			1										1-0/8	368
SERIAL IN 06	H	F05J2		1-01 *		D11- 4					1		N	1	369
SERIAL IN 06	H	F06J2		1-02 *		D03- 5									369
SERIAL IN 06	H			1										1-0/8	369
SERIAL IN 07	H	C05J2		1-01 *		D11- 4					1		N	1	370
SERIAL IN 07	H	C06J2		1-02 *		D03- 5									370
SERIAL IN 07	H			1										1-0/8	370
SERIAL IN 08	H	B05P2		1-01 *		D11- 4					1		N	8-7/8	371
SERIAL IN 08	H	E07L2		1-02 *		D04- 2									371
SERIAL IN 08	H			1										8-7/8	371
SERIAL IN 09	H	C05A1		1-01 *		D11- 4					1		N	11-5/8	372
SERIAL IN 09	H	F07V1		1-02 *		D04- 2									372
SERIAL IN 09	H			1										11-5/8	372
SERIAL IN 10	H	B05U2		1-01 *		D11- 4					1		N	9-3/8	373
SERIAL IN 10	H	E07V2		1-02 *		D04- 3									373
SERIAL IN 10	H			1										9-3/8	373
SERIAL IN 11	H	B05V2		1-01 *		D11- 4					1		N	3-5/8	374
SERIAL IN 11	H	C07V1		1-02 *		D04- 3									374
SERIAL IN 11	H			1										3-5/8	374
SERIAL IN 12	H	A05L1		1-01 *		D11- 4					1		N	9-3/8	375
SERIAL IN 12	H	D07L1		1-02 *		D04- 4									375
SERIAL IN 12	H			1										9-3/8	375
SERIAL IN 13	H	A05J1		1-01 *		D11- 4					1		N	11-3/8	376
SERIAL IN 13	H	E07E1		1-02 *		D04- 4									376
SERIAL IN 13	H			1										11-3/8	376

RUN NAME	A/P	PIN NAME	ORDER PIN	BAY - ORDER	Q	DRAW OPT	RV	RG	Y	X	Z	REMARKS	NC FLAG	LENGTH EXCEPTIONS	RUN NUMBER
SERIAL IN 14	H	A05E2		1-01 *		D11- 4					1		N	15-1/8	377
SERIAL IN 14	H	F07J2		1-02 *		D04- 5									377
SERIAL IN 14	H			1										15-1/8	377
SERIAL IN 15	H	A05H1		1-01 *		D11- 4					1		N	7-1/8	378
SERIAL IN 15	H	C07J2		1-02 *		D04- 5									378
SERIAL IN 15	H			1										7-1/8	378
SERIAL OUT 00	H	E06A1		1-01 *		D03- 2					2		N	1	379
SERIAL OUT 00	H	E05A1		1-02 *		D11- 4					1		N	4-7/8	379
SERIAL OUT 00	H	F03L2		1-03 *		D12- 2									379
SERIAL OUT 00	H			1										5-7/8	379
SERIAL OUT 01	H	F03N2		1-01 *		D12- 2					1		N	1-3/8	380
SERIAL OUT 01	H	F05P2		1-02 *		D11- 4					2		N	1	380
SERIAL OUT 01	H	F06P2		1-03 *		D03- 2									380
SERIAL OUT 01	H			1										2-3/8	380
SERIAL OUT 02	H	E06R1		1-01 *		D03- 3					2		N	1	381
SERIAL OUT 02	H	E05R1		1-02 *		D11- 4					1		N	3-7/8	381
SERIAL OUT 02	H	F03R2		1-03 *		D12- 2									381
SERIAL OUT 02	H			1										4-7/8	381
SERIAL OUT 03	H	C06N1		1-01 *		D03- 3					2		N	1	382
SERIAL OUT 03	H	C05N1		1-02 *		D11- 4					1		N	9-5/8	382
SERIAL OUT 03	H	F03T2		1-03 *		D12- 2									382
SERIAL OUT 03	H			1										10-5/8	382
SERIAL OUT 04	H	D06A1		1-01 *		D03- 4					2		N	1	383
SERIAL OUT 04	H	D05A1		1-02 *		D11- 4					1		N	8-1/8	383
SERIAL OUT 04	H	F03R1		1-03 *		D12- 2									383
SERIAL OUT 04	H			1										9-1/8	383
SERIAL OUT 05	H	D06R2		1-01 *		D03- 4					2		N	1	384
SERIAL OUT 05	H	D05R2		1-02 *		D11- 4					1		N	5-5/8	384
SERIAL OUT 05	H	F03E2		1-03 *		D12- 2									384
SERIAL OUT 05	H			1										6-5/8	384
SERIAL OUT 06	H	F03S1		1-01 *		D12- 2					1		N	2-3/8	385
SERIAL OUT 06	H	F05D2		1-02 *		D11- 4					2		N	1	385
SERIAL OUT 06	H	F06D2		1-03 *		D03- 5									385
SERIAL OUT 06	H			1										3-3/8	385
SERIAL OUT 07	H	C06B1		1-01 *		D03- 5					2		N	1	386
SERIAL OUT 07	H	C05B1		1-02 *		D11- 4					1		N	10-3/8	386
SERIAL OUT 07	H	F03L1		1-03 *		D12- 2									386
SERIAL OUT 07	H			1										11-3/8	386
SERIAL OUT 08	H	B05N2		1-01 *		D11- 4					1		N	6-7/8	387
SERIAL OUT 08	H	D03R2		1-02 *		D12- 3					2		N	2-7/8	387
SERIAL OUT 08	H	E07A1		1-03 *		D04- 2									387
SERIAL OUT 08	H			1										9-6/8	387

RUN NAME	A/P	PIN NAME	ORDER PIN	BAY - ORDER	Q	DRAW OPT	RV RG Y	X	Z	REMARKS	NC LENGTH EXCEPTIONS FLAG	RUN NUMBER
SERIAL OUT 09	H	B03V2		1-01 *		D12- 3			2		N 1-7/8	388
SERIAL OUT 09	H	B05R2		1-02 *		D11- 4			1		N 11-5/8	388
SERIAL OUT 09	H	F07P2		1-03 *		D04- 2						388
SERIAL OUT 09	H			1							13-4/8	388
SERIAL OUT 10	H	B05S2		1-01 *		D11- 4			2		N 4-1/8	389
SERIAL OUT 10	H	C03V2		1-02 *		D12- 3			1		N 6-7/8	389
SERIAL OUT 10	H	E07R1		1-03 *		D04- 3						389
SERIAL OUT 10	H			1							11-0/8	389
SERIAL OUT 11	H	B05T2		1-01 *		D11- 4			2		N 3-1/8	390
SERIAL OUT 11	H	C07N1		1-02 *		D04- 3			1		N 3-2/8	390
SERIAL OUT 11	H	D03B1		1-03 *		D12- 3						390
SERIAL OUT 11	H			1							6-3/8	390
SERIAL OUT 12	H	A05M1		1-01 *		D11- 4			1		N 8-1/8	391
SERIAL OUT 12	H	D07A1		1-02 *		D04- 4			2		N 3	391
SERIAL OUT 12	H	D03R1		1-03 *		D12- 3						391
SERIAL OUT 12	H			1							11-1/8	391
SERIAL OUT 13	H	A05K1		1-01 *		D11- 4			1		N 9-5/8	392
SERIAL OUT 13	H	D03N1		1-02 *		D12- 3			2		N 2-7/8	392
SERIAL OUT 13	H	D07R2		1-03 *		D04- 4						392
SERIAL OUT 13	H			1							12-4/8	392
SERIAL OUT 14	H	A05D2		1-01 *		D11- 4			1		N 10-7/8	393
SERIAL OUT 14	H	D03P1		1-02 *		D12- 3			2		N 6-7/8	393
SERIAL OUT 14	H	F07D2		1-03 *		D04- 5						393
SERIAL OUT 14	H			1							17-6/8	393
SERIAL OUT 15	H	A05F2		1-01 *		D11- 4			2		N 5-7/8	394
SERIAL OUT 15	H	C07B1		1-02 *		D04- 5			1		N 6-3/8	394
SERIAL OUT 15	H	D03M1		1-03 *		D12- 3						394
SERIAL OUT 15	H			1							12-2/8	394
SET REQUEST	H	B02V2		1-01 *		D07			1		N 10-7/8	395
SET REQUEST	H	F04N1		1-02 *		D13- 1						395
SET REQUEST	H			1							10-7/8	395
SILO MAINT PULSE	L	F03V2		1-01 *		D12- 3			1		N 2-5/8	396
SILO MAINT PULSE	L	F05F1		1-02 *		D11- 1						396
SILO MAINT PULSE	L			1							2-5/8	396
SSR 00	H	D03H1		1-01 *		D12- 2			1		N 4-7/8	397
SSR 00	H	D09T2		1-02 *		D01- 2						397
SSR 00	H			1							4-7/8	397
SSR 01	H	D09S2		1-01 *		D01- 2			1		N 4-7/8	398
SSR 01	H	E03E1		1-02 *		D12- 2						398
SSR 01	H			1							4-7/8	398
SSR 02	H	D09R2		1-01 *		D01- 2			1		N 5-5/8	399
SSR 02	H	E03L1		1-02 *		D12- 2						399
SSR 02	H			1							5-5/8	399

RUN NAME	A/P	PIN NAME	ORDER PIN	BAY - ORDER	Q	DRAW OPT	RV RG Y	X	Z	REMARKS	NC LENGTH EXCEPTIONS FLAG	RUN NUMBER
SSR 03	H	D09U2		1-01 *		D01- 2			1		N 4-4/8	400
SSR 03	H	E03T2		1-02 *		D12- 2						400
SSR 03	H			1							4-4/8	400
SSR 04	H	D09N2		1-01 *		D01- 2			1		N 4-7/8	401
SSR 04	H	E03U2		1-02 *		D12- 2						401
SSR 04	H			1							4-7/8	401
SSR 05	H	D09P2		1-01 *		D01- 2			1		N 4-7/8	402
SSR 05	H	E03D1		1-02 *		D12- 2						402
SSR 05	H			1							4-7/8	402
SSR 06	H	C04H1		1-01 *		D13- 2			1		N 6-5/8	403
SSR 06	H	E03N1		1-02 *		D12- 2						403
SSR 06	H			1							6-5/8	403
SSR 07	H	C04F1		1-01 *		D13- 2			1		N 8-3/8	404
SSR 07	H	F03D2		1-02 *		D12- 2						404
SSR 07	H			1							8-3/8	404
SSR 08	H	C03M1		1-01 *		D12- 3			1		N 5-3/8	405
SSR 08	H	D09U1		1-02 *		D01- 2						405
SSR 08	H			1							5-3/8	405
SSR 09	H	C03D2		1-01 *		D12- 3			1		N 7-1/8	406
SSR 09	H	D09S1		1-02 *		D01- 2						406
SSR 09	H			1							7-1/8	406
SSR 10	H	B03K2		1-01 *		D12- 3			1		N 9-1/8	407
SSR 10	H	D09R1		1-02 *		D01- 2						407
SSR 10	H			1							9-1/8	407
SSR 11	H	B03D1		1-01 *		D12- 3			1		N 9-5/8	408
SSR 11	H	D09P1		1-02 *		D01- 2						408
SSR 11	H			1							9-5/8	408
SSR 12	H	B03C1		1-01 *		D12- 3			1		N 9-5/8	409
SSR 12	H	D09M1		1-02 *		D01- 2						409
SSR 12	H			1							9-5/8	409
SSR 13	H	B03P2		1-01 *		D12- 3			1		N 8-3/8	410
SSR 13	H	D09M2		1-02 *		D01- 2						410
SSR 13	H			1							8-3/8	410
SSR 14	H	C03F2				D12- 3					1-PIN RUN	411
SSR 15	H	C03N2		1-01 *		D12- 3			1		N 3-3/8	412
SSR 15	H	C09R1		1-02 *		D01- 1						412
SSR 15	H			1							3-3/8	412
SSYN	H	B02A1		1-01 *		D07			1		N 4-5/8	413
SSYN	H	C04E2		1-02 *		D13- 1						413
SSYN	H			1							4-5/8	413

RUN NAME	A/P	PIN NAME	ORDER PIN	BAY - ORDER	Q	DRAW OPT	RV	RG	Y	X	Z	REMARKS	NC FLAG	LENGTH EXCEPTIONS	RUN NUMBER
TBMT LINE 00	H	D05H2		1-01	*	D11- 1					1		N	2-5/8	414
TBMT LINE 00	H	E06C1		1-02	*	D03- 2					2		N	1-3/8	414
TBMT LINE 00	H	E04J2		1-03	*	D13- 1									414
TBMT LINE 00	H			1										4-0/8	414
TBMT LINE 01	H	D05J2		1-01	*	D11- 1					2		N	3-7/8	415
TBMT LINE 01	H	E04M2		1-02	*	D13- 1					1		N	4-3/8	415
TBMT LINE 01	H	F06N2		1-03	*	D03- 2									415
TBMT LINE 01	H			1										8-2/8	415
TBMT LINE 02	H	D05F1		1-01	*	D11- 1					1		N	4-3/8	416
TBMT LINE 02	H	E06B1		1-02	*	D03- 3					2		N	1-3/8	416
TBMT LINE 02	H	E04R1		1-03	*	D13- 1									416
TBMT LINE 02	H			1										5-6/8	416
TBMT LINE 03	H	C06P1		1-01	*	D03- 3					2		N	2-7/8	417
TBMT LINE 03	H	D05H1		1-02	*	D11- 1					1		N	4-3/8	417
TBMT LINE 03	H	E04U2		1-03	*	D13- 1									417
TBMT LINE 03	H			1										7-2/8	417
TBMT LINE 04	H	D06C1		1-01	*	D03- 4					2		N	1-2/8	418
TBMT LINE 04	H	D05J1		1-02	*	D11- 1					1		N	6-7/8	418
TBMT LINE 04	H	F04B2		1-03	*	D13- 1									418
TBMT LINE 04	H			1										8-1/8	418
TBMT LINE 05	H	D06P2		1-01	*	D03- 4					2		N	1-3/8	419
TBMT LINE 05	H	D05K1		1-02	*	D11- 1					1		N	6-5/8	419
TBMT LINE 05	H	F04P1		1-03	*	D13- 1									419
TBMT LINE 05	H			1										9-0/8	419
TBMT LINE 06	H	D05M1		1-01	*	D11- 1					1		N	5-1/8	420
TBMT LINE 06	H	F06C1		1-02	*	D03- 5					2		N	1-7/8	420
TBMT LINE 06	H	F04H1		1-03	*	D13- 1									420
TBMT LINE 06	H			1										7-0/8	420
TBMT LINE 07	H	C06D2		1-01	*	D03- 5					2		N	4-7/8	421
TBMT LINE 07	H	D05N1		1-02	*	D11- 1					1		N	4-7/8	421
TBMT LINE 07	H	F04D2		1-03	*	D13- 1									421
TBMT LINE 07	H			1										9-6/8	421
TBMT LINE 08	H	C05M1		1-01	*	D11- 1					1		N	5-5/8	422
TBMT LINE 08	H	E07C1		1-02	*	D04- 2					2		N	2-3/8	422
TBMT LINE 08	H	E04J1		1-03	*	D13- 1									422
TBMT LINE 08	H			1										8-0/8	422
TBMT LINE 09	H	C05L1		1-01	*	D11- 1					1		N	6-1/8	423
TBMT LINE 09	H	E04L1		1-02	*	D13- 1					2		N	5-1/8	423
TBMT LINE 09	H	F07N2		1-03	*	D04- 2									423
TBMT LINE 09	H			1										11-2/8	423
TBMT LINE 10	H	C05K1		1-01	*	D11- 1					1		N	6-3/8	424
TBMT LINE 10	H	E04R2		1-02	*	D13- 1					2		N	1-5/8	424
TBMT LINE 10	H	E07S1		1-03	*	D04- 3									424
TBMT LINE 10	H			1										8-0/8	424

RUN NAME	A/P	PIN NAME	ORDER PIN	BAY - ORDER	Q	DRAW OPT	RV	RG	Y	X	Z	REMARKS	NC FLAG	LENGTH EXCEPTIONS	RUN NUMBER
TBMT LINE 11	H	C07P1		1-01	*	D04- 3					2		N	1-2/8	425
TBMT LINE 11	H	C05L2		1-02	*	D11- 1					1		N	6-7/8	425
TBMT LINE 11	H	E04T2		1-03	*	D13- 1									425
TBMT LINE 11	H			1										8-1/8	425
TBMT LINE 12	H	C05K2		1-01	*	D11- 1					2		N	3-1/8	426
TBMT LINE 12	H	D07C1		1-02	*	D04- 4					1		N	7-1/8	426
TBMT LINE 12	H	F04D1		1-03	*	D13- 1									426
TBMT LINE 12	H			1										10-2/8	426
TBMT LINE 13	H	C05U1		1-01	*	D11- 1					2		N	3-7/8	427
TBMT LINE 13	H	D07P2		1-02	*	D04- 4					1		N	6-1/8	427
TBMT LINE 13	H	F04F2		1-03	*	D13- 1									427
TBMT LINE 13	H			1										10-0/8	427
TBMT LINE 14	H	C05S1		1-01	*	D11- 1					1		N	7-7/8	428
TBMT LINE 14	H	F07C1		1-02	*	D04- 5					2		N	2	428
TBMT LINE 14	H	F04A2		1-03	*	D13- 1									428
TBMT LINE 14	H			1										9-7/8	428
TBMT LINE 15	H	C07D2		1-01	*	D04- 5					2		N	2-2/8	429
TBMT LINE 15	H	C05R1		1-02	*	D11- 1					1		N	8-7/8	429
TBMT LINE 15	H	F04R1		1-03	*	D13- 1									429
TBMT LINE 15	H			1										11-1/8	429
TIME OUT (0)	H	A04K2		1-01	*	D13- 1					1		N	1-3/8	430
TIME OUT (0)	H	A03B2		1-02	*	D12- 1					2		N	3-1/8	430
TIME OUT (0)	H	B02K1		1-03	*	D07					1		N	10-5/8	430
TIME OUT (0)	H	E05R2		1-04	*	D11- 2									430
TIME OUT (0)	H			1										15-1/8	430
TIME OUT (1)	H	B02L1				D07								1-PIN RUN	431
TP	H	F02L1				D09								1-PIN RUN	432
TP CLR WRITE	H	F04K1				D13- 2								1-PIN RUN	433
TP CONT STROBE INT (1)	H	E04H2				D13- 1								1-PIN RUN	434
TP EC DLY	H	F04L1				D13- 2								1-PIN RUN	435
TP EC PLS	H	F04L2				D13- 2								1-PIN RUN	436
TP EC+ES SSYN INHIBIT	H	F04F1				D13- 1								1-PIN RUN	437
TP MASTER CL SSYN		F04C1				D13- 1								1-PIN RUN	438
TP NPR COMP	L	F04K2				D13- 2								1-PIN RUN	439
TP SCR 00 CLEAR	H	F05K1				D11- 2								1-PIN RUN	440
TP SCR 00 LOAD	H	C05H1				D11- 2								1-PIN RUN	441
TP SCR HIGH BYTE LOAD	H	E05P2				D11- 2								1-PIN RUN	442

RUN NAME	A/P	PIN NAME	ORDER PIN	BAY - ORDER	Q	DRAW OPT	RV	RG	Y	X	Z	REMARKS	NC FLAG	LENGTH EXCEPTIONS	RUN NUMBER
TP SET UP DLY	H	F04A1				D13- 2								1-PIN RUN	443
TP WRITE	L	F04J2				D13- 2								1-PIN RUN	444
TRAN DATA 01	H	C07N2		1-01	*	D04- 4					2		N	1	445
TRAN DATA 01	H	C06N2		1-02	*	D03- 4					1		N	4-1/8	445
TRAN DATA 01	H	D04M2		1-03	*	D13- 1									445
TRAN DATA 01	H			1										5-1/8	445
TRAN DATA 02	H	C07M1		1-01	*	D04- 4					2		N	1	446
TRAN DATA 02	H	C06M1		1-02	*	D03- 4					1		N	3-1/8	446
TRAN DATA 02	H	D04F2		1-03	*	D13- 1									446
TRAN DATA 02	H			1										4-1/8	446
TRAN DATA 03	H	C06L2		1-01	*	D03- 4					2		N	1	447
TRAN DATA 03	H	C07L2		1-02	*	D04- 4					1		N	3-4/8	447
TRAN DATA 03	H	D04E2		1-03	*	D13- 1									447
TRAN DATA 03	H			1										4-4/8	447
TRAN DATA 04	H	C07L1		1-01	*	D04- 4					2		N	1	448
TRAN DATA 04	H	C06L1		1-02	*	D03- 4					1		N	3-5/8	448
TRAN DATA 04	H	D04F1		1-03	*	D13- 1									448
TRAN DATA 04	H			1										4-5/8	448
TRAN DATA 05	H	C07H1		1-01	*	D04- 4					2		N	1	449
TRAN DATA 05	H	C06H1		1-02	*	D03- 4					1		N	3-5/8	449
TRAN DATA 05	H	D04D1		1-03	*	D13- 1									449
TRAN DATA 05	H			1										4-5/8	449
TRAN DATA 06	H	C04J2		1-01	*	D13- 1					1		N	1-5/8	450
TRAN DATA 06	H	C06M2		1-02	*	D03- 4					2		N	1	450
TRAN DATA 06	H	C07M2		1-03	*	D04- 4									450
TRAN DATA 06	H			1										2-5/8	450
TRAN DATA 07	H	C04J1		1-01	*	D13- 1					1		N	1-3/8	451
TRAN DATA 07	H	C06K1		1-02	*	D03- 4					2		N	1	451
TRAN DATA 07	H	C07K1		1-03	*	D04- 4									451
TRAN DATA 07	H			1										2-3/8	451
TRAN DATA 08	H	C04K2		1-01	*	D13- 1					1		N	1-4/8	452
TRAN DATA 08	H	C06K2		1-02	*	D03- 4					2		N	1	452
TRAN DATA 08	H	C07K2		1-03	*	D04- 4									452
TRAN DATA 08	H			1										2-4/8	452
TRAN SCAN CLK	H	E05M2		1-01	*	D11- 1					1		N	4-5/8	453
TRAN SCAN CLK	H	F04V1		1-02	*	D13- 1									453
TRAN SCAN CLK	H			1										4-5/8	453
TRAN STROBE	H	C03J2		1-01	*	D12- 1					1		N	4-5/8	454
TRAN STROBE	H	D07J2		1-02	*	D04- 5					2		N	1	454
TRAN STROBE	H	D06J2		1-03	*	D03- 5									454
TRAN STROBE	H			1										5-5/8	454

RUN NAME	A/P	PIN NAME	ORDER PIN	BAY - ORDER	Q	DRAW OPT	RV	RG	Y	X	Z	REMARKS	NC FLAG	LENGTH EXCEPTIONS	RUN NUMBER
TRANS SCAN A	H	D05V1		1-01	*	D11- 1					1		N	1-5/8	455
TRANS SCAN A	H	D06M1		1-02	*	D03- 5					2		N	1	455
TRANS SCAN A	H	D07M1		1-03	*	D04- 5									455
TRANS SCAN A	H			1										2-5/8	455
TRANS SCAN B	H	D05U1		1-01	*	D11- 1					1		N	1-4/8	456
TRANS SCAN B	H	D06M2		1-02	*	D03- 5					2		N	1	456
TRANS SCAN B	H	D07M2		1-03	*	D04- 5									456
TRANS SCAN B	H			1										2-4/8	456
TRANS SCAN C	H	D07L2		1-01	*	D04- 5					2		N	1	457
TRANS SCAN C	H	D06L2		1-02	*	D03- 5					1		N	3-1/8	457
TRANS SCAN C	H	E05J2		1-03	*	D11- 1									457
TRANS SCAN C	H			1										4-1/8	457
TRANS SCAN D	H	D07D1		1-01	*	D04- 5					1		N	3-7/8	458
TRANS SCAN D	H	E05E2		1-02	*	D11- 1									458
TRANS SCAN D	H			1										3-7/8	458
TRANS SCAN D	L	D06D1		1-01	*	D03- 5					1		N	3-1/8	459
TRANS SCAN D	L	E05D2		1-02	*	D11- 1									459
TRANS SCAN D	L			1										3-1/8	459
TTL DATA IN 00	L	B07C1		1-01	*	D02					1		N	10-3/8	460
TTL DATA IN 00	L	E05P1		1-02	*	D11- 4									460
TTL DATA IN 00	L			1										10-3/8	460
TTL DATA IN 01	L	B07E1		1-01	*	D02					1		N	9-5/8	461
TTL DATA IN 01	L	E05N2		1-02	*	D11- 4									461
TTL DATA IN 01	L			1										9-5/8	461
TTL DATA IN 02	L	B07H1		1-01	*	D02					1		N	9-5/8	462
TTL DATA IN 02	L	E05N1		1-02	*	D11- 4									462
TTL DATA IN 02	L			1										9-5/8	462
TTL DATA IN 03	L	B07K1		1-01	*	D02					1		N	9-3/8	463
TTL DATA IN 03	L	E05M1		1-02	*	D11- 4									463
TTL DATA IN 03	L			1										9-3/8	463
TTL DATA IN 04	L	B07M1		1-01	*	D02					1		N	4-3/8	464
TTL DATA IN 04	L	C05V2		1-02	*	D11- 4									464
TTL DATA IN 04	L			1										4-3/8	464
TTL DATA IN 05	L	B07P1		1-01	*	D02					1		N	4-1/8	465
TTL DATA IN 05	L	C05U2		1-02	*	D11- 4									465
TTL DATA IN 05	L			1										4-1/8	465
TTL DATA IN 06	L	B07S1		1-01	*	D02					1		N	3-5/8	466
TTL DATA IN 06	L	C05P1		1-02	*	D11- 4									466
TTL DATA IN 06	L			1										3-5/8	466
TTL DATA IN 07	L	B07U1		1-01	*	D02					1		N	2-7/8	467
TTL DATA IN 07	L	C05N2		1-02	*	D11- 4									467
TTL DATA IN 07	L			1										2-7/8	467

RUN NAME	A/P	PIN NAME	ORDER PIN	BAY - ORDER	Q	DRAW OPT	RV	RG	Y	X	Z	REMARKS	NC FLAG	LENGTH EXCEPTIONS	RUN NUMBER
TTL DATA IN 08	L	B07C2		1-01 *		D02					1		N	4-1/8	468
TTL DATA IN 08	L	C05D1		1-02 *		D11- 4									468
TTL DATA IN 08	L			1										4-1/8	468
TTL DATA IN 09	L	B07E2		1-01 *		D02					1		N	3-7/8	469
TTL DATA IN 09	L	C05C1		1-02 *		D11- 4									469
TTL DATA IN 09	L			1										3-7/8	469
TTL DATA IN 10	L	B05M2		1-01 *		D11- 4					1		N	1-7/8	470
TTL DATA IN 10	L	B07H2		1-02 *		D02									470
TTL DATA IN 10	L			1										1-7/8	470
TTL DATA IN 11	L	B05L2		1-01 *		D11- 4					1		N	1-3/8	471
TTL DATA IN 11	L	B07K2		1-02 *		D02									471
TTL DATA IN 11	L			1										1-3/8	471
TTL DATA IN 12	L	A05P1		1-01 *		D11- 4					1		N	4-1/8	472
TTL DATA IN 12	L	B07M2		1-02 *		D02									472
TTL DATA IN 12	L			1										4-1/8	472
TTL DATA IN 13	L	A05N1		1-01 *		D11- 4					1		N	4-3/8	473
TTL DATA IN 13	L	B07P2		1-02 *		D02									473
TTL DATA IN 13	L			1										4-3/8	473
TTL DATA IN 14	L	A05D1		1-01 *		D11- 4					1		N	5-5/8	474
TTL DATA IN 14	L	B07S2		1-02 *		D02									474
TTL DATA IN 14	L			1										5-5/8	474
TTL DATA IN 15	L	A05A1		1-01 *		D11- 4					1		N	6-3/8	475
TTL DATA IN 15	L	B07U2		1-02 *		D02									475
TTL DATA IN 15	L			1										6-3/8	475
TTL DATA OUT 00	L	B07D1		1-01 *		D02					1		N	13-7/8	476
TTL DATA OUT 00	L	F03P2		1-02 *		D12- 2									476
TTL DATA OUT 00	L			1										13-7/8	476
TTL DATA OUT 01	L	B07F1		1-01 *		D02					1		N	13-3/8	477
TTL DATA OUT 01	L	F03M2		1-02 *		D12- 2									477
TTL DATA OUT 01	L			1										13-3/8	477
TTL DATA OUT 02	L	B07J1		1-01 *		D02					1		N	13-5/8	478
TTL DATA OUT 02	L	F03S2		1-02 *		D12- 2									478
TTL DATA OUT 02	L			1										13-5/8	478
TTL DATA OUT 03	L	B07L1		1-01 *		D02					1		N	13-5/8	479
TTL DATA OUT 03	L	F03U2		1-02 *		D12- 2									479
TTL DATA OUT 03	L			1										13-5/8	479
TTL DATA OUT 04	L	B07N1		1-01 *		D02					1		N	12-3/8	480
TTL DATA OUT 04	L	F03K2		1-02 *		D12- 2									480
TTL DATA OUT 04	L			1										12-3/8	480
TTL DATA OUT 05	L	B07R1		1-01 *		D02					1		N	12-1/8	481
TTL DATA OUT 05	L	F03J1		1-02 *		D12- 2									481
TTL DATA OUT 05	L			1										12-1/8	481

RUN NAME	A/P	PIN NAME	ORDER PIN	BAY - ORDER	Q	DRAW OPT	RV	RG	Y	X	Z	REMARKS	NC FLAG	LENGTH EXCEPTIONS	RUN NUMBER
TTL DATA OUT 06	L	B07T1		1-01 *		D02					1		N	12-5/8	482
TTL DATA OUT 06	L	F03P1		1-02 *		D12- 2									482
TTL DATA OUT 06	L			1										12-5/8	482
TTL DATA OUT 07	L	B07V1		1-01 *		D02					1		N	11-3/8	483
TTL DATA OUT 07	L	F03F1		1-02 *		D12- 2									483
TTL DATA OUT 07	L			1										11-3/8	483
TTL DATA OUT 08	L	B07D2		1-01 *		D02					1		N	9-3/8	484
TTL DATA OUT 08	L	D03S1		1-02 *		D12- 3									484
TTL DATA OUT 08	L			1										9-3/8	484
TTL DATA OUT 09	L	B07F2		1-01 *		D02					1		N	8-5/8	485
TTL DATA OUT 09	L	D03P2		1-02 *		D12- 3									485
TTL DATA OUT 09	L			1										8-5/8	485
TTL DATA OUT 10	L	B07J2		1-01 *		D02					1		N	7-1/8	486
TTL DATA OUT 10	L	D03A1		1-02 *		D12- 3									486
TTL DATA OUT 10	L			1										7-1/8	486
TTL DATA OUT 11	L	B07L2		1-01 *		D02					1		N	7-1/8	487
TTL DATA OUT 11	L	D03C1		1-02 *		D12- 3									487
TTL DATA OUT 11	L			1										7-1/8	487
TTL DATA OUT 12	L	B07N2		1-01 *		D02					1		N	7-3/8	488
TTL DATA OUT 12	L	D03L2		1-02 *		D12- 3									488
TTL DATA OUT 12	L			1										7-3/8	488
TTL DATA OUT 13	L	B07R2		1-01 *		D02					1		N	7-3/8	489
TTL DATA OUT 13	L	D03M2		1-02 *		D12- 3									489
TTL DATA OUT 13	L			1										7-3/8	489
TTL DATA OUT 14	L	B07T2		1-01 *		D02					1		N	7-1/8	490
TTL DATA OUT 14	L	D03N2		1-02 *		D12- 3									490
TTL DATA OUT 14	L			1										7-1/8	490
TTL DATA OUT 15	L	B07V2		1-01 *		D02					1		N	6-7/8	491
TTL DATA OUT 15	L	D03L1		1-02 *		D12- 3									491
TTL DATA OUT 15	L			1										6-7/8	491
TX CLOCK LINE 00	L	E06K1		1-01 *		D03- 2					1		N	2-1/8	492
TX CLOCK LINE 00	L	E08U2		1-02 *		D05- 1									492
TX CLOCK LINE 00	L			1										2-1/8	492
TX CLOCK LINE 01	L	E08R2		1-01 *		D05- 1					1		N	4-5/8	493
TX CLOCK LINE 01	L	F06U2		1-02 *		D03- 2									493
TX CLOCK LINE 01	L			1										4-5/8	493
TX CLOCK LINE 02	L	E06V1		1-01 *		D03- 3					1		N	2-1/8	494
TX CLOCK LINE 02	L	E08L2		1-02 *		D05- 1									494
TX CLOCK LINE 02	L			1										2-1/8	494
TX CLOCK LINE 03	L	C06U1		1-01 *		D03- 3					1		N	5-5/8	495
TX CLOCK LINE 03	L	E08F2		1-02 *		D05- 1									495
TX CLOCK LINE 03	L			1										5-5/8	495

RUN NAME	A/P	PIN NAME	ORDER PIN	BAY - ORDER	Q	DRAW CPT	RV	RG	Y	X	Z	REMARKS	NC FLAG	LENGTH EXCEPTIONS	RUN NUMBER
TX CLOCK LINE 04	L	C08N2		1-01 *		D05- 2					1		N	3-7/8	496
TX CLOCK LINE 04	L	D06J1		1-02 *		D03- 4									496
TX CLOCK LINE 04	L			1										3-7/8	496
TX CLOCK LINE 05	L	C08H2		1-01 *		D05- 2					1		N	5-3/8	497
TX CLOCK LINE 05	L	D06V2		1-02 *		D03- 4									497
TX CLOCK LINE 05	L			1										5-3/8	497
TX CLOCK LINE 06	L	C08B1		1-01 *		D05- 2					1		N	9-7/8	498
TX CLOCK LINE 06	L	F06H2		1-02 *		D03- 5									498
TX CLOCK LINE 06	L			1										9-7/8	498
TX CLOCK LINE 07	L	B08T2		1-01 *		D05- 2					1		N	2-2/8	499
TX CLOCK LINE 07	L	C06H2		1-02 *		D03- 5									499
TX CLOCK LINE 07	L			1										2-2/8	499
TX CLOCK LINE 08	L	E07K1		1-01 *		D04- 2					1		N	1-6/8	500
TX CLOCK LINE 08	L	E08T2		1-02 *		D05- 3									500
TX CLOCK LINE 08	L			1										1-6/8	500
TX CLOCK LINE 09	L	E08P2		1-01 *		D05- 3					1		N	4-1/8	501
TX CLOCK LINE 09	L	F07U2		1-02 *		D04- 2									501
TX CLOCK LINE 09	L			1										4-1/8	501
TX CLOCK LINE 10	L	E07V1		1-01 *		D04- 3					1		N	2	502
TX CLOCK LINE 10	L	E08K2		1-02 *		D05- 3									502
TX CLOCK LINE 10	L			1										2-0/8	502
TX CLOCK LINE 11	L	C07U1		1-01 *		D04- 3					1		N	4-7/8	503
TX CLOCK LINE 11	L	E08E2		1-02 *		D05- 3									503
TX CLOCK LINE 11	L			1										4-7/8	503
TX CLOCK LINE 12	L	C08M2		1-01 *		D05- 4					1		N	3-3/8	504
TX CLOCK LINE 12	L	D07J1		1-02 *		D04- 4									504
TX CLOCK LINE 12	L			1										3-3/8	504
TX CLOCK LINE 13	L	C08F2		1-01 *		D05- 4					1		N	5-1/8	505
TX CLOCK LINE 13	L	D07V2		1-02 *		D04- 4									505
TX CLOCK LINE 13	L			1										5-1/8	505
TX CLOCK LINE 14	L	C08A1		1-01 *		D05- 4					1		N	9-3/8	506
TX CLOCK LINE 14	L	F07H2		1-02 *		D04- 5									506
TX CLOCK LINE 14	L			1										9-3/8	506
TX CLOCK LINE 15	L	B08S1		1-01 *		D05- 4					1		N	2-1/8	507
TX CLOCK LINE 15	L	C07H2		1-02 *		D04- 5									507
TX CLOCK LINE 15	L			1										2-1/8	507
UC1 MASTER DA	H	B05H2		1-01 *		D11- 1					1		N	11-7/8	508
UC1 MASTER DA	H	F06L2		1-02 *		D03- 2									508
UC1 MASTER DA	H			1										11-7/8	508
UC1 MASTER FE	H	A05T2		1-01 *		D11- 1					1		N	7-3/8	509
UC1 MASTER FE	H	C09U1		1-02 *		D01- 1					2		N	6-3/8	509
UC1 MASTER FE	H	E06N1		1-03 *		D03- 4									509
UC1 MASTER FE	H			1										13-6/8	509

RUN NAME	A/P	PIN NAME	ORDER PIN	BAY - ORDER	Q	DRAW OPT	RV	RG	Y	X	Z	REMARKS	NC FLAG	LENGTH EXCEPTIONS	RUN NUMBER
UC1 MASTER OR	H	B05K2		1-01 *		D11- 1					1		N	6-5/8	510
UC1 MASTER OR	H	D09B1		1-02 *		D01- 1					2		N	5-3/8	510
UC1 MASTER OR	H	E06N2		1-03 *		D03- 2									510
UC1 MASTER OR	H			1										12-0/8	510
UC1 MASTER PE	H	D09E2		1-01 *		D01- 1					1		N	5-1/8	511
UC1 MASTER PE	H	E06M2		1-02 *		D03- 4									511
UC1 MASTER PE	H			1										5-1/8	511
UC1 RCV DATA 01	L	C09M2		1-01 *		D01- 1					1		N	4-1/8	512
UC1 RCV DATA 01	L	D04L1		1-02 *		D13- 1					2		N	1-5/8	512
UC1 RCV DATA 01	L	D06P1		1-03 *		D03- 3									512
UC1 RCV DATA 01	L			1										5-6/8	512
UC1 RCV DATA 02	L	C09J2		1-01 *		D01- 1					1		N	4-3/8	513
UC1 RCV DATA 02	L	D04J1		1-02 *		D13- 1					2		N	3-5/8	513
UC1 RCV DATA 02	L	E06F1		1-03 *		D03- 3									513
UC1 RCV DATA 02	L			1										8-0/8	513
UC1 RCV DATA 03	L	C09E2		1-01 *		D01- 1					2		N	4-5/8	514
UC1 RCV DATA 03	L	D04H1		1-02 *		D13- 1					1		N	6-7/8	514
UC1 RCV DATA 03	L	F06J1		1-03 *		D03- 3									514
UC1 RCV DATA 03	L			1										11-4/8	514
UC1 RCV DATA 04	L	C09H2		1-01 *		D01- 1					2		N	4-5/8	515
UC1 RCV DATA 04	L	D04K1		1-02 *		D13- 1					1		N	6-7/8	515
UC1 RCV DATA 04	L	F06K2		1-03 *		D03- 3									515
UC1 RCV DATA 04	L			1										11-4/8	515
UC1 RCV DATA 05	L	C09V2		1-01 *		D01- 1					2		N	4-1/8	516
UC1 RCV DATA 05	L	D04C1		1-02 *		D13- 1					1		N	7-5/8	516
UC1 RCV DATA 05	L	F06L1		1-03 *		D03- 3									516
UC1 RCV DATA 05	L			1										11-6/8	516
UC1 RCV DATA 06	L	C04L1		1-01 *		D13- 1					2		N	3-7/8	517
UC1 RCV DATA 06	L	C09T2		1-02 *		D01- 1					1		N	9-5/8	517
UC1 RCV DATA 06	L	F06N1		1-03 *		D03- 3									517
UC1 RCV DATA 06	L			1										13-4/8	517
UC1 RCV DATA 07	L	C04K1		1-01 *		D13- 1					2		N	3-5/8	518
UC1 RCV DATA 07	L	C09P2		1-02 *		D01- 1					1		N	9-5/8	518
UC1 RCV DATA 07	L	F06M2		1-03 *		D03- 3									518
UC1 RCV DATA 07	L			1										13-2/8	518
UC1 RCV DATA 08	L	C09S2		1-01 *		D01- 1					1		N	9-3/8	519
UC1 RCV DATA 08	L	F04B1		1-02 *		D13- 1					2		N	1-7/8	519
UC1 RCV DATA 08	L	F06M1		1-03 *		D03- 3									519
UC1 RCV DATA 08	L			1										11-2/8	519
UC2 MASTER DA	H	B05D2		1-01 *		D11- 1					1		N	12-5/8	520
UC2 MASTER DA	H	F07L2		1-02 *		D04- 2									520
UC2 MASTER DA	H			1										12-5/8	520

RUN NAME	A/P	PIN NAME	ORDER PIN	BAY - ORDER	Q	DRAW OPT	RV	RG	Y	X	Z	REMARKS	NC FLAG	LENGTH EXCEPTIONS	RUN NUMBER
UC2 MASTER PE	H	A05R2		1-01	*	D11- 1					1		N	7-7/8	521
UC2 MASTER PE	H	C09V1		1-02	*	D01- 1					2		N	8-7/8	521
UC2 MASTER PE	H	E07N1		1-03	*	D04- 4									521
UC2 MASTER PE	H			1										13-6/8	521
UC2 MASTER OR	H	B05J2		1-01	*	D11- 1					1		N	6-3/8	522
UC2 MASTER OR	H	D09A1		1-02	*	D01- 1					2		N	4-7/8	522
UC2 MASTER OR	H	E07N2		1-03	*	D04- 2									522
UC2 MASTER OR	H			1										11-2/8	522
UC2 MASTER PE	H	D09D2		1-01	*	D01- 1					1		N	4-7/8	523
UC2 MASTER PE	H	E07M2		1-02	*	D04- 4									523
UC2 MASTER PE	H			1										4-7/8	523
UC2 RCV DATA 01	L	C09L2		1-01	*	D01- 1					1		N	4-1/8	524
UC2 RCV DATA 01	L	D04K2		1-02	*	D13- 1					2		N	2-1/8	524
UC2 RCV DATA 01	L	D07P1		1-03	*	D04- 3									524
UC2 RCV DATA 01	L			1										6-2/8	524
UC2 RCV DATA 02	L	C09K2		1-01	*	D01- 1					2		N	4	525
UC2 RCV DATA 02	L	D04J2		1-02	*	D13- 1					1		N	3-7/8	525
UC2 RCV DATA 02	L	E07F1		1-03	*	D04- 3									525
UC2 RCV DATA 02	L			1										7-7/8	525
UC2 RCV DATA 03	L	C09D2		1-01	*	D01- 1					2		N	4-7/8	526
UC2 RCV DATA 03	L	D04H2		1-02	*	D13- 1					1		N	7-1/8	526
UC2 RCV DATA 03	L	F07J1		1-03	*	D04- 3									526
UC2 RCV DATA 03	L			1										12-0/8	526
UC2 RCV DATA 04	L	C09F2		1-01	*	D01- 1					2		N	5-2/8	527
UC2 RCV DATA 04	L	D04L2		1-02	*	D13- 1					1		N	6-7/8	527
UC2 RCV DATA 04	L	F07K2		1-03	*	D04- 3									527
UC2 RCV DATA 04	L			1										12-1/8	527
UC2 RCV DATA 05	L	C09K1		1-01	*	D01- 1					2		N	4-2/8	528
UC2 RCV DATA 05	L	D04A1		1-02	*	D13- 1					1		N	8-3/8	528
UC2 RCV DATA 05	L	F07L1		1-03	*	D04- 3									528
UC2 RCV DATA 05	L			1										12-5/8	528
UC2 RCV DATA 06	L	C04M2		1-01	*	D13- 1					2		N	3-5/8	529
UC2 RCV DATA 06	L	C09U2		1-02	*	D01- 1					1		N	8-7/8	529
UC2 RCV DATA 06	L	F07N1		1-03	*	D04- 3									529
UC2 RCV DATA 06	L			1										12-4/8	529
UC2 RCV DATA 07	L	C04L2		1-01	*	D13- 1					2		N	3-1/8	530
UC2 RCV DATA 07	L	C09N2		1-02	*	D01- 1					1		N	9-3/8	530
UC2 RCV DATA 07	L	F07M2		1-03	*	D0 - 3									530
UC2 RCV DATA 07	L			1										12-4/8	530
UC2 RCV DATA 08	L	C09R2		1-01	*	D01- 1					2		N	4-3/8	531
UC2 RCV DATA 08	L	D04B1		1-02	*	D13- 1					1		N	8-1/8	531
UC2 RCV DATA 08	L	F07M1		1-03	*	D04- 3									531
UC2 RCV DATA 08	L			1										12-4/8	531

RUN NAME	A/P	PIN NAME	ORDER PIN	BAY - ORDER	Q	DRAW OPT	RV	RG	Y	X	Z	REMARKS	NC FLAG	LENGTH EXCEPTIONS	RUN NUMBER
XMIT FINISHED PULSE	L	A03R1		1-01	*	D12- 1					1		N	14-3/8	532
XMIT FINISHED PULSE	L	F05P1		1-02	*	D11- 2									532
XMIT FINISHED PULSE	L			1										14-3/8	532
XMIT INTR REQ	H	A06H2		1-01	*	D07					1		N	0-4/8	533
XMIT INTR REQ	H	A06K2		1-02	*	D07					2		N	14-5/8	533
XMIT INTR REQ	H	F05M1		1-03	*	D11- 2									533
XMIT INTR REQ	H			1										15-1/8	533
XMIT SCAN 00	H	D04S2		1-01	*	D13- 1					1		N	1-5/8	534
XMIT SCAN 00	H	E05C1		1-02	*	D11- 1									534
XMIT SCAN 00	H			1										1-5/8	534
XMIT SCAN 01	H	D04R1		1-01	*	D13- 1					1		N	1-3/8	535
XMIT SCAN 01	H	D05V2		1-02	*	D11- 1									535
XMIT SCAN 01	H			1										1-3/8	535
XMIT SCAN 02	H	D04P2		1-01	*	D13- 1					1		N	2-5/8	536
XMIT SCAN 02	H	E05H2		1-02	*	D11- 1									536
XMIT SCAN 02	H			1										2-5/8	536
XMIT SCAN 03	H	D04R2		1-01	*	D13- 1					1		N	2-3/8	537
XMIT SCAN 03	H	E05J1		1-02	*	D11- 1									537
XMIT SCAN 03	H			1										2-3/8	537
XMIT STATUS	L	C05D2		1-01	*	D11- 1					1		N	10-1/8	538
XMIT STATUS	L	F04M1		1-02	*	D13- 1									538
XMIT STATUS	L			1										10-1/8	538

THE DRAWING AND SPECIFICATIONS HEREIN ARE THE PROPERTY OF DIGITAL EQUIPMENT CORPORATION AND SHALL NOT BE REPRODUCED OR COPIED OR USED IN WHOLE OR IN PART AS THE BASIS FOR THE MANUFACTURE OR SALE OF ITEMS WITHOUT WRITTEN PERMISSION. COPYRIGHT ©1972 DIGITAL EQUIPMENT CORPORATION

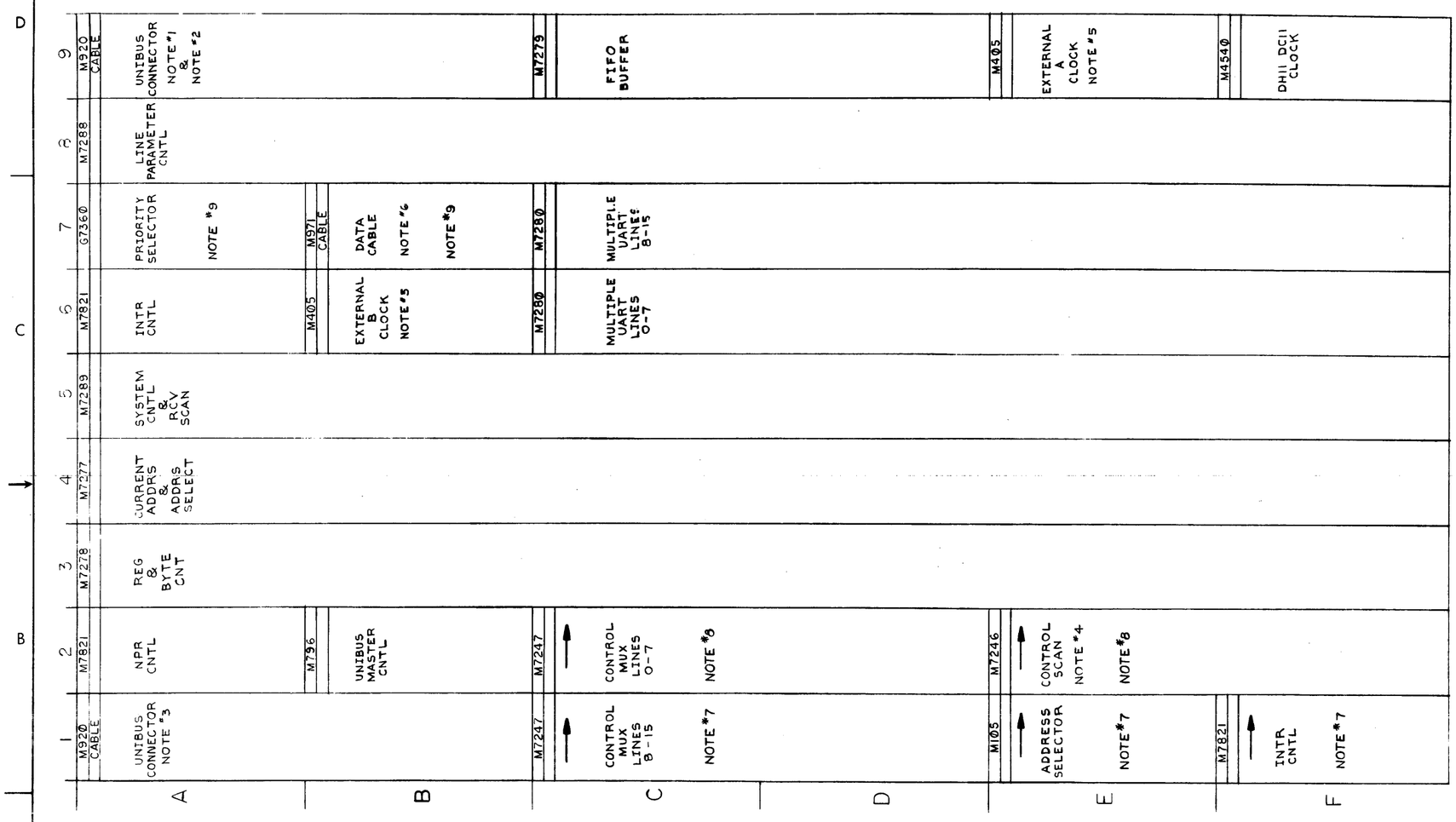

NOTES:

1. IF END OF BUS REPLACE M920 WITH M930.
2. IF LAST UNIT IN BASIC BOX REPLACE M920 WITH BC11A CABLE END WHEN EXPANDING TO PHERIPHERAL BOX.
3. IF FIRST UNIT IN EXPANDER BOX REPLACE M920 WITH BC11A CABLE END
4. E02 MUST BE A G727 GRANT CONTINUITY MODULE IF NO MODEM CONTROL MODULE SET IS INSTALLED.
   → DM11-BB MODEM CONTROL OPTION USED WITH THE DH11-AA AND DH11-AC OPTIONS.
5. MODULE SLOTS PROVIDED FOR ADDITIONAL CLOCK RATES.
6. FOR DIAGNOSTIC CHECKOUT REPLACE M971 WITH M974. THIS NOTE DOES NOT APPLY TO THE DH11-AD AND DH11-AE OPTIONS.
7. THIS SLOT CONTAINS MODEM CONTROL MODULE M7807 FOR THE DH11-AD OPTION.
8. THIS SLOT CONTAINS MODEM CONTROL MODULE M7808 FOR THE DH11-AD OPTION.
9. THIS SLOT CONTAINS EIA CONVERTER AND PRIORITY MODULE M5906 FOR THE DH11-AC AND DH11-AE OPTIONS.

FIRST USED ON OPTION/MODEL	QTY.	DESCRIPTION	PART NO.	ITEM NO.
PDP 11		PARTS LIST		

UNLESS OTHERWISE SPECIFIED DIMENSION IN INCHES
TOLERANCES
DECIMALS: .xxx = .005, .xx = .02, .x = .1 — ANGLES: ±0 30
REMOVE BURRS AND BREAK SHARP CORNERS SURFACE QUALITY ▽
MATERIAL
FINISH

DRN. G. Gulliver DATE 12-28-72
CHK'D. DATE
ENG. William P. Smith DATE 2/24/73
PROJ. ENG. DATE 2-23-73
PROD. DATE 2-23-73
NEXT HIGHER ASSY. B-DD-DH11-Ø
SCALE NONE
SHEET OF

digital EQUIPMENT CORPORATION MAYNARD MASSACHUSETTS

TITLE MODULE UTILIZATION

SIZE DMU CODE | NUMBER DH11-Ø-3 | REV. D
DIST.

REV LTR	CHK	CHANGE NO	DATE	BY
A		DH11-00002		J. MCNAMARA
B		DH11-00005		J. MCNAMARA
C		DH11-00006		J. MCNAMARA
D		DH11-00007		J. MCNAMARA

DEC FORM NO DRD 102 C

This drawing and specifications, herein, are the property of Digital Equipment Corporation and shall not be reproduced or copied or used in whole or in part as the basis for the manufacture or sale of items without written permission. COPYRIGHT © 1972
DIGITAL EQUIPMENT CORPORATION

NOTES:
1. MODULE PINS, AS USED IN THIS PRINT, ARE AS PER SYSTEM UNIT BACK PANEL WIRES.
2. * REMOVE WIRES TO INHIBIT INTERRUPS FROM TRANSITIONS.
3. * * REMOVE WIRE TO INHIBIT INITIALIZE FROM CLEARING THE SCAN AND MUX MODULES.
4. J1 ON M7247 IS CLOSEST TO THE MODULE FINGERS.

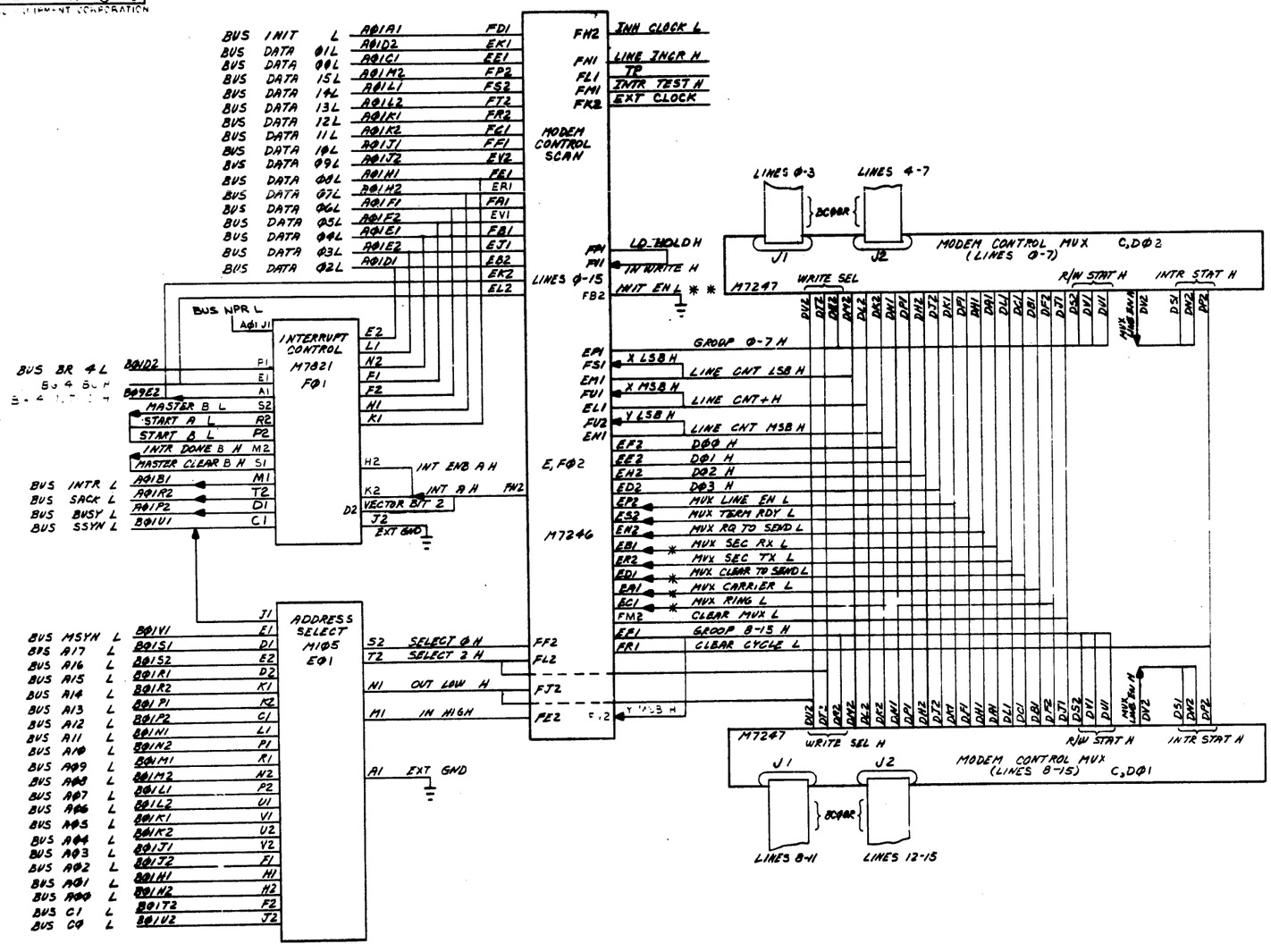

FIRST USED ON OPTION/MODEL	QTY.	DESCRIPTION	PART NO.	ITEM NO.
DM11-BB		PARTS LIST		

UNLESS OTHERWISE SPECIFIED DIMENSION IN INCHES. TOLERANCES

DECIMALS	ANGLES
.XXX = .005	±0° 30'
.XX = .02	
.X = .1	

REMOVE BURRS AND BREAK SHARP CORNERS SURFACE QUALITY ✓

MATERIAL

FINISH

		DATE
DRN.		12-29-72
CHK.		2/22/73
ENG.	Willis R. Smith	2/22/73
PROJ. ENG.		2-22-73
PROD.		2-23-73

EQUIPMENT CORPORATION MAYNARD, MASSACHUSETTS

TITLE
DM11-BB
BLOCK DIAGRAM

NEXT HIGHER ASSY. 6-DD-DH11-0

SCALE NONE

SHEET 1 OF 1

SIZE	CODE	NUMBER	REV.
D	BD	DH11-0-4	

DIST.

REVISIONS: REV. | CHANGE NO. | CHK

DEC FORM NO DRD 100-A

This drawing and specifications, herein, are the property of Digital Equipment Corporation and shall not be reproduced or copied or used in whole or in part as the basis for the manufacture or sale of items without written permission.

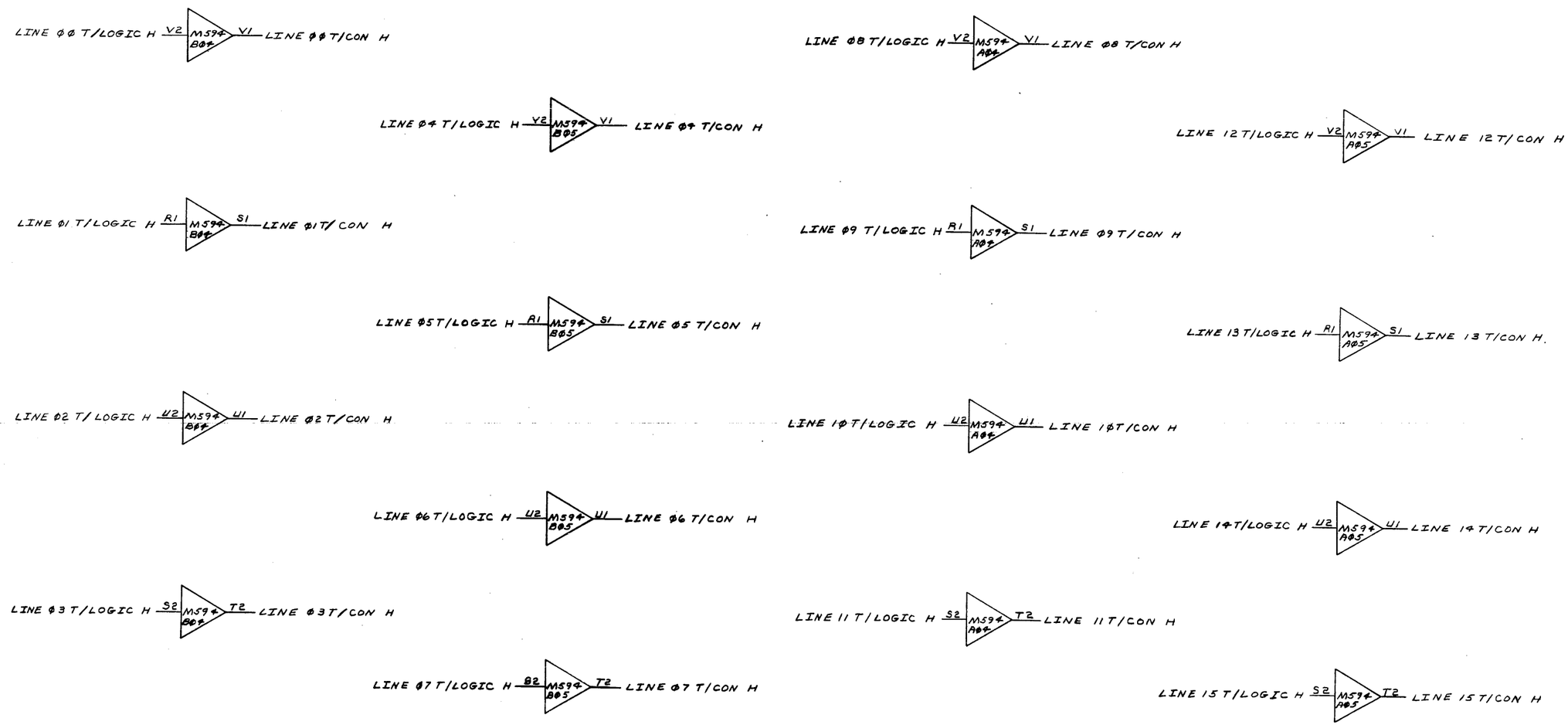

FIRST USED ON OPTION/MODEL	QTY.	DESCRIPTION	PART NO.	ITEM NO.
PDP 11		PARTS LIST		

UNLESS OTHERWISE SPECIFIED DIMENSION IN INCHES. TOLERANCES

DECIMALS	ANGLES
.XXX = .005	±0° 30'
.XX = .02	
.X = .1	

REMOVE BURRS AND BREAK SHARP CORNERS SURFACE QUALITY ✓

MATERIAL

FINISH

DRN. Ray Kenn	DATE 6-3-71	digital EQUIPMENT CORPORATION MAYNARD, MASSACHUSETTS
CHK'D. A. Raimondi	DATE 6-5-71	TITLE
ENG.	DATE	DM11-DB
PROJ. ENG.	DATE	TRANSMIT & RECEIVE
PROD. Frank Hayes	DATE 11/22/73	
NEXT HIGHER ASSY. A-ML-DM11-A		
SCALE —	SHEET 1 OF 2	SIZE D CODE BS NUMBER DM11-A-Ø8 REV.

REVISIONS: CHANGE NO. | CHK | REV

DEC FORM NO DRD 102-B

This drawing and specifications, herein, are the property of Digital Equipment Corporation and shall not be reproduced or copied or used in whole or in part as the basis for the manufacture or sale of items without written permission.

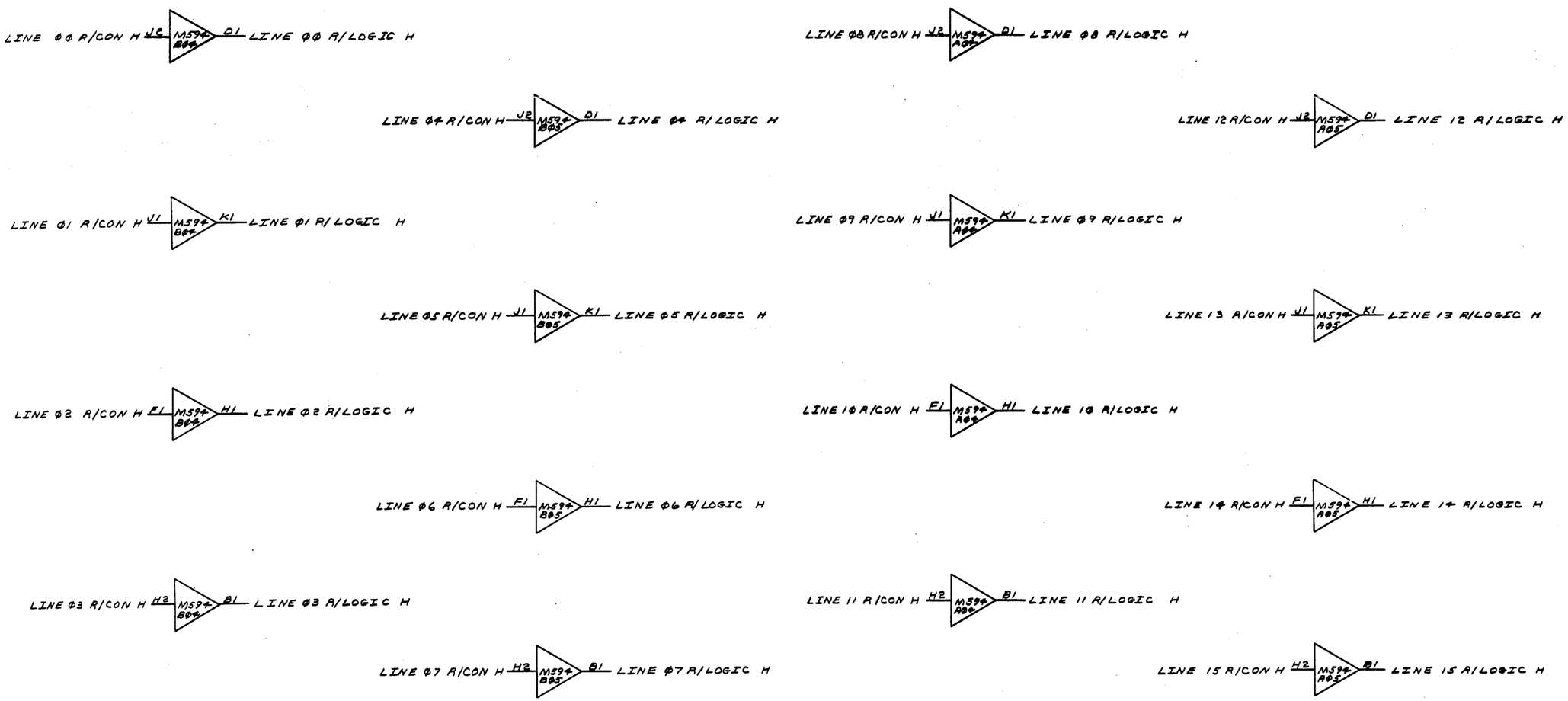

FIRST USED ON OPTION/MODEL	QTY.	DESCRIPTION	PART NO.	ITEM NO.
PDP 11		PARTS LIST		

UNLESS OTHERWISE SPECIFIED DIMENSION IN INCHES. TOLERANCES

DECIMALS	ANGLES
.XXX = .005 .XX = .02 .X = .1	±0° 30'

REMOVE BURRS AND BREAK SHARP CORNERS SURFACE QUALITY ✓

MATERIAL —

FINISH —

		DATE
DRN.	Peg Lemon	6-3-71
CHK'D.	A. Raimondi	6-5-71
ENG.	[illegible]	6/1/71
PROJ. ENG.	[illegible]	6/1/71
PROD.	[illegible]	6/2/71

NEXT HIGHER ASSY. A-ML-DM11-A

SCALE —

SHEET 2 OF 2

digital EQUIPMENT CORPORATION MAYNARD, MASSACHUSETTS

TITLE DM11-DR TRANSMIT & RECEIVE

SIZE	CODE	NUMBER	REV.
D	BS	DM11-A-Ø8	

DIST.

REVISIONS | REV. | CHANGE NO. | CHK.

DEC FORM NO. DRD 100-4

This drawing and specifications, herein, are the property of Digital Equipment Corporation and shall not be reproduced or copied or used in whole or in part as the basis for the manufacture or sale of items without written permission.

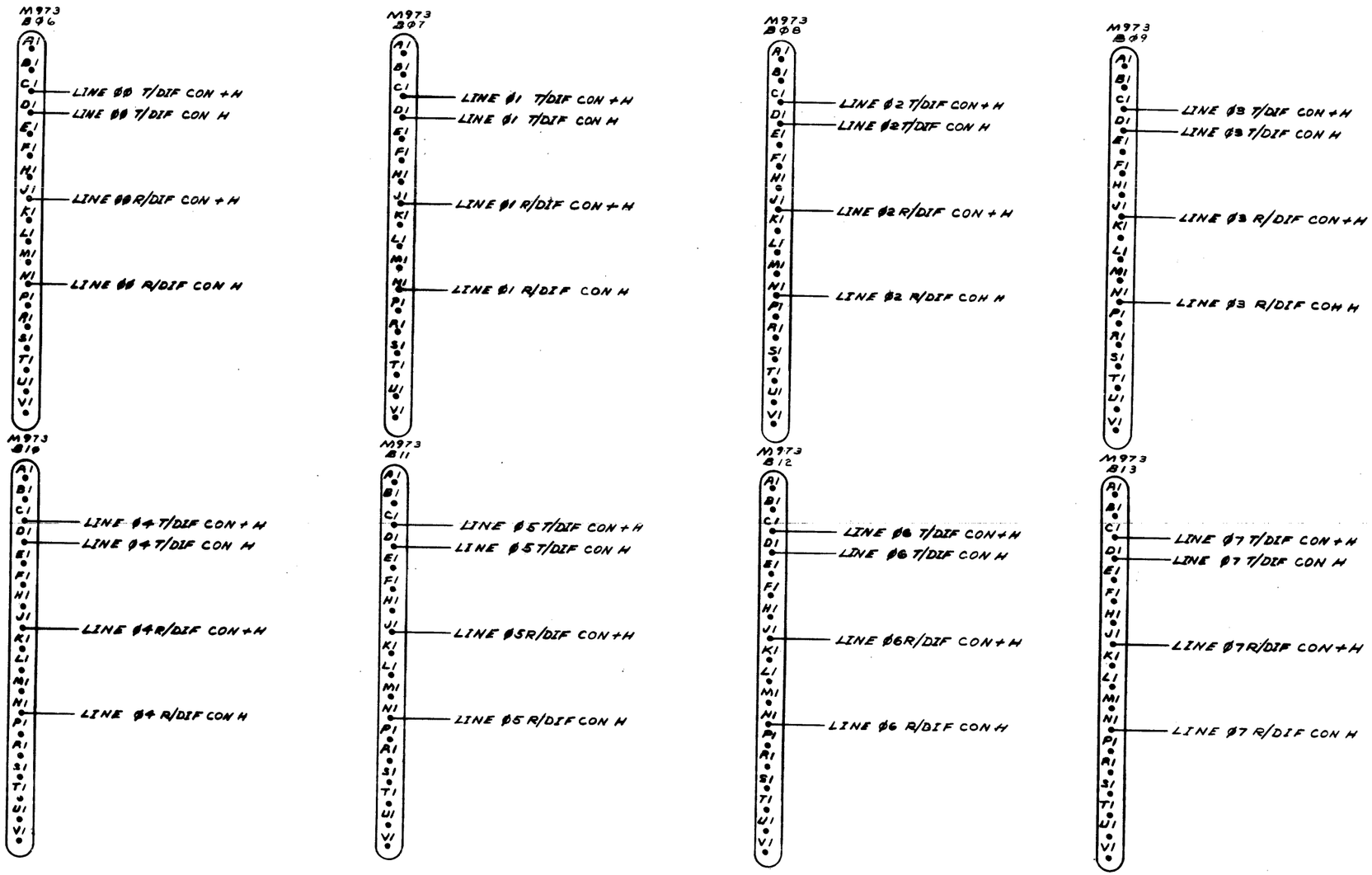

REVISIONS		
SYM.	CHANGE NO.	REV.
	DM11A-00008	A

V. BASTIAN

FIRST USED ON OPTION/MODEL	QTY.	DESCRIPTION	PART NO.
PDP11		PARTS LIST	

UNLESS OTHERWISE SPECIFIED DIMENSIONS IN INCHES. TOLERANCES

DECIMALS	ANGLES
.XXX = .005	±0° 30'
.XX = .02	
.X = .1	

REMOVE BURRS AND BREAK SHARP CORNERS SURFACE QUALITY ✓

MATERIAL

FINISH

DATE 5 13 71

[redacted] EQUIPMENT CORPORATION

TITLE DM11-DA CONNECTOR CARDS

A-MLr DM11-A

SCALE

SHEET 1 OF 1

D IC DM11-A-09 REV. A

MK

This drawing and specifications, herein, are the property of Digital Equipment Corporation and shall not be reproduced or copied or used in whole or in part as the basis for the manufacture or sale of items without written permission.

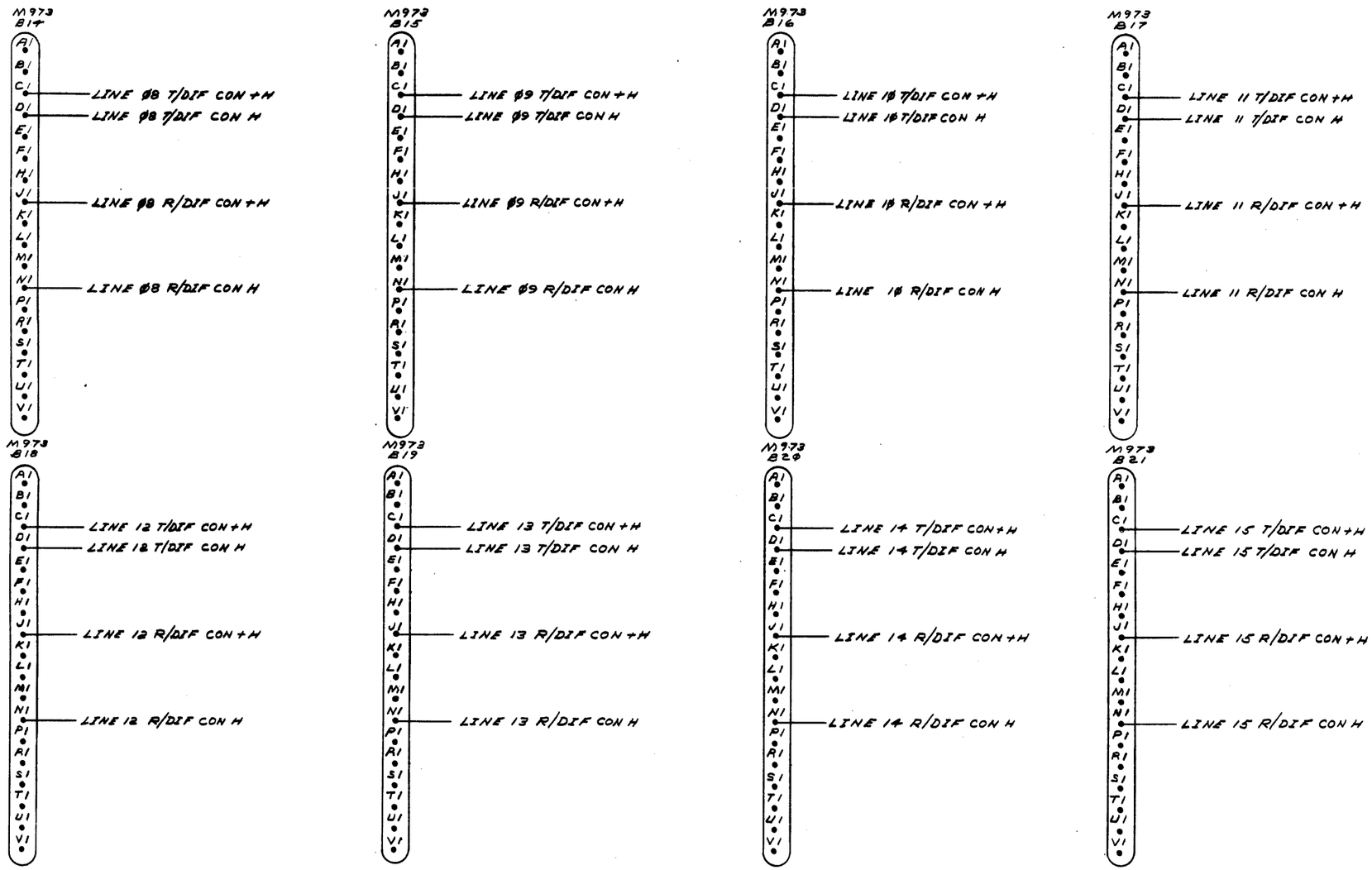

FIRST USED ON OPTION/MODEL	QTY.	DESCRIPTION	PART NO.	ITEM NO.
PDP11		PARTS LIST		

UNLESS OTHERWISE SPECIFIED DIMENSION IN INCHES. TOLERANCES

DECIMALS	ANGLES
.XXX = .005 .XX = .02 .X = .1	±0° 30'

REMOVE BURRS AND BREAK SHARP CORNERS SURFACE QUALITY ✓

MATERIAL

FINISH

DRN. Peg Jenson	DATE 6-15-71	digital EQUIPMENT CORPORATION MAYNARD, MASSACHUSETTS
CHK'D. D. Cowgill	DATE 6-18-71	TITLE
ENG.	DATE 6/21/71	DM11-DA
PROJ. ENG.	DATE 6/21/71	CONNECTOR CARDS
PROD.	DATE 6/22/71	
NEXT HIGHER ASSY. A-ML-DM11-A		SIZE D CODE IC NUMBER DM11-A-Ø9 REV. A
SCALE		
SHEET 2 OF 2		DIST. MK

REVISIONS | REV. | CHANGE NO. | CHK.

DEC FORM NO. DRD 100-A

SIZE D CODE IC NUMBER DM11-A-Ø9 REV. A

This drawing and specifications, herein, are the property of Digital Equipment Corporation and shall not be reproduced or copied or used in whole or in part as the basis for the manufacture or sale of items without written permission.

Pin	1	2	3	4	5	6	7	8	9	10	11	12	13	14	15	16	17	18	19	20	21	22
USAGE	M971 CABLE ●2	M971 CABLE ●2	M971 CABLE ●2	***2	**2	*2	*2	*2	*2	*2	*2	*2	*2	*2	*2	*2	*2	*2	*2	*2	*2	***2
A				LINE Ø8 THRU LINE 11	LINE 12 THRU LINE 15	LINE Ø0 CONTROL LEADS	LINE Ø1 CONTROL LEADS	LINE Ø2 CONTROL LEADS	LINE Ø3 CONTROL LEADS	LINE Ø4 CONTROL LEADS	LINE Ø5 CONTROL LEADS	LINE Ø6 CONTROL LEADS	LINE Ø7 CONTROL LEADS	LINE Ø8 CONTROL LEADS	LINE Ø9 CONTROL LEADS	LINE 1Ø CONTROL LEADS	LINE 11 CONTROL LEADS	LINE 12 CONTROL LEADS	LINE 13 CONTROL LEADS	LINE 14 CONTROL LEADS	LINE 15 CONTROL LEADS	LINE Ø8 THRU LINE 11
USAGE	M971 CABLE ●●2	M971 CABLE ●2	M974 ▲2	**2	**2	▲2	▲2	▲2	▲2	▲2	▲2	▲2	▲2	▲2	▲2	▲2	▲2	▲2	▲2	▲2	▲2	***2
B	LINE ØØ THRU LINE 15			LINE ØØ THRU LINE Ø3	LINE Ø4 THRU LINE Ø7	LINE ØØ OUTPUT	LINE Ø1 OUTPUT	LINE Ø2 OUTPUT	LINE Ø3 OUTPUT	LINE Ø4 OUTPUT	LINE Ø5 OUTPUT	LINE Ø6 OUTPUT	LINE Ø7 OUTPUT	LINE Ø8 OUTPUT	LINE Ø9 OUTPUT	LINE 1Ø OUTPUT	LINE 11 OUTPUT	LINE 12 OUTPUT	LINE 13 OUTPUT	LINE 14 OUTPUT	LINE 15 OUTPUT	LINE ØØ THRU LINE Ø3

Pin	23	24	25	26	27	28	29	30	31	32	33	34	35	36	37	38	39	40	41	42	43	44
USAGE	***2	2	2	2	2	2	2	2	2	2	2	2	2	2	2	2	2	2	2	2	2	2
A	LINE 12 THRU LINE 15																					
USAGE	***2	2	2	2	2	2	2	2	2	2	2	2	2	2	2	2	2	2	2	2	2	2
B	LINE Ø4 THRU LINE Ø7																					

** USE M594 FOR DMII-DB.

▲ 16 CABLE SLOTS ONE PER LINE. FOR DMII-DA USE M973, FOR DMII-DB USE BCØIR-25.

* LEVEL CONVERSION OF CONTROL LEADS. ONE SLOT PER LINE. USE M594 ONLY WHEN DMII-BB IS IMPLEMENTED. IF DMII-DB IS USED REPLACE M594 WITH W4Ø4-A (SUPPLIED WITH DMII-DB) IF DMII-DA IS USED LEAVE BLANK.

●● DATA CABLE FROM DMII-AA CONTROL LOGIC.

● USED ONLY IF DMII-BB IS IMPLEMENTED.

▲▲ JUMPER CARD USED FOR DIAGNOSTIC PROGRAMS ONLY, REMOVE FOR NORMAL OPERATION.

*** USE M596 FOR DMII-DA.

REVISIONS			
REV.	CHANGE NO	CHK	
A	DMIIA-00009	BASTIANI	2-22-72
B	DMIIA-00010	V. BASTIANI	2-24-72

FIRST USED ON OPTION/MODEL: PDP11

DO NOT SCALE DRAWING
UNLESS OTHERWISE SPECIFIED
DIMENSION IN INCHES
TOLERANCES
DECIMALS ± .005 FRACTIONS ± 1/64 ANGLES ± 0°30'
FINAL SURFACE QUALITY
REMOVE BURRS AND BREAK SHARP CORNERS

MATERIAL
FINISH

		DATE
DRN.		6-8-71
CHK'D.	A. Raimondi	6-17-71
ENG.		
PROJ. ENG.		
PROD.		6-21-71

NEXT HIGHER ASSY: A-ML-DMII-A
SCALE
SHEET 1 OF 1

digital EQUIPMENT CORPORATION
MAYNARD, MASSACHUSETTS

TITLE: MODULE UTILIZATION (DISTRIBUTION PANEL)

SIZE DMU CODE NUMBER DMII-A-3 REV. B

DIST.

MK

SIZE DMU NUMBER DMII-A-3 REV. B

SIZE CODE NUMBER DMII-A-3 REV. B

DRD 112

DRWG NO	REV LTR
K-WL-DMII-A-5	E

REVISIONS

REV LTR	ECO NO	DATE	ENG
A	DMIIA-C0002	9-13-71	[illegible]
B	DMIIA-C0010	2-24-72	[illegible]
C	[illegible]	[illegible]-72	[illegible]
D	DMIIA-D0017	8-73	[illegible]
E	DMIIA-C0002	9-1-74	[illegible]

DRAWN [illegible]	DATE 5/[illegible]/71	digital EQUIPMENT CORPORATION MAYNARD, MASSACHUSETTS
CHECKED [illegible]	DATE 6-1-71	
ENG [illegible]	DATE 6/[illegible]	
PROJ ENG [illegible]	DATE 6/1/71	
PROD [illegible]	DATE 6/3/71	

TITLE
WIRE LIST DISTRIBUTION PNL

FOR TAPE* FILE*

ASSY NO	SIZE	CODE	DWG NO	REV LTR
D-AD-7008443-0-0	K	WL	DMII-A-5	E

SCALE —#— SHEET 1 OF 1 DIST.

RUN NAME	A/P	PIN NAME	ORDER PIN	BAY - ORDER	Q	DRAW	RV	PG	Y	X	Z	REMARKS	LENGTH	EXCEPTIONS	RUN NUMBER
-15V		A06A1		1-01 *	1						1				1
-15V		A07A1		1-02 *							2				1
-15V		A08A1		1-03 *							1				1
-15V		A09A1		1-04 *							2				1
-15V		A10A1		1-05 *							1				1
-15V		A11A1		1-06 *							2				1
-15V		A12A1		1-07 *							1				1
-15V		A13A1		1-08 *							2				1
-15V		A14A1		1-09 *							1				1
-15V		A15A1		1-10 *							2				1
-15V		A16A1		1-11 *							1				1
-15V		A17A1		1-12 *							2				1
-15V		A18A1		1-13 *							1				1
-15V		A19A1		1-14 *							2				1
-15V		A20A1		1-15 *							1				1
-15V		A21A1		1-16 *							2				1
-15V		A21B2		1-17 *											1
-15V				1									44-0/8		1
OOCARRIER/CON		A06H2		1-01 *							1				2
OOCARRIER/CON		B06P2		1-02 *											2
OOCARRIER/CON				1									5-6/8		2
OOCARRIER/LOGIC		A01J1		1-01 *							1				3
OOCARRIER/LOGIC		A06B1		1-02 *											3
OOCARRIER/LOGIC				1									5-2/8		3
OOCLEAR TO SEND/CON		A06M2		1-01 *							1				4
OOCLEAR TO SEND/CON		B06K2		1-02 *											4
OOCLEAR TO SEND/CON				1									4-6/8		4
OOCLEAR TO SEND/LOGIC		A01H1		1-01 *							1				5
OOCLEAR TO SEND/LOGIC		A06F2		1-02 *											5
OOCLEAR TO SEND/LOGIC				1									5-2/8		5
OODTR/CON		A06R2		1-01 *							1				6
OODTR/CON		B06R2		1-02 *											6
OODTR/CON				1									5-0/8		6
OODTR/LOGIC		A01E1		1-01 *							1				7
OODTR/LOGIC		A06P2		1-02 *											7
OODTR/LOGIC				1									5-4/8		7
OOREQ TO SEND/CON		A06T2		1-01 *							2				8
OOREQ TO SEND/CON		B06L2		1-02 *											8
OOREQ TO SEND/CON				1									4-2/8		8

Digital EQUIPMENT CORPORATION

RUN NAME	A/P	PIN NAME	ORDER PIN	BAY - ORDER	Q	DRAW	RV	PG	Y	X	Z	REMARKS	LENGTH	EXCEPTIONS	RUN NUMBER
OOREQ TO SEND/LOGIC		A01F1		1-01 *							1				9
OOREQ TO SEND/LOGIC		A06S2		1-02 *											9
OOREQ TO SEND/LOGIC				1									5-4/8		9
OORING/CON		A06K2		1-01 *							1				10
OORING/CON		B06M2		1-02 *											10
OORING/CON				1									5-2/8		10
OORING/LOGIC		A01D1		1-01 *							1				11
OORING/LOGIC		A06C1		1-02 *											11
OORING/LOGIC				1									4-6/8		11
OOSEC RX LOGIC		A01L1		1-01 *							1				12
OOSEC RX LOGIC		A06E1		1-02 *											12
OOSEC RX LOGIC				1									5-0/8		12
OOSEC TX LOGIC		A01K1		1-01 *							1				13
OOSEC TX LOGIC		A06D2		1-02 *											13
OOSEC TX LOGIC				1									5-4/8		13
OOSUP REC/CON		A06L2		1-01 *							1				14
OOSUP REC/CON		B06F1		1-02 *											14
OOSUP REC/CON				1									4-6/8		14
OOSUP TRAN/CON		A06D1		1-01 *							1				15
OOSUP TRAN/CON		B06E1		1-02 *											15
OOSUP TRAN/CON				1									3-4/8		15
O1CARRIER/CON		A07H2		1-01 *							1				16
O1CARRIER/CON		B07P2		1-02 *											16
O1CARRIER/CON				1									5-6/8		16
O1CARRIER/LOGIC		A01S1		1-01 *							1				17
O1CARRIER/LOGIC		A07B1		1-02 *											17
O1CARRIER/LOGIC				1									6-2/8		17
O1CLEAR TO SEND/CON		A07M2		1-01 *							1				18
O1CLEAR TO SEND/CON		B07K2		1-02 *											18
O1CLEAR TO SEND/CON				1									4-6/8		18
O1CLEAR TO SEND/LOGIC		A01R1		1-01 *							1				19
O1CLEAR TO SEND/LOGIC		A07F2		1-02 *											19
O1CLEAR TO SEND/LOGIC				1									6-0/8		19
O1DTR/CON		A07R2		1-01 *							1				20
O1DTR/CON		B07R2		1-02 *											20
O1DTR/CON				1									5-0/8		20

Digital EQUIPMENT CORPORATION

RUN NAME	A/P	PIN NAME	ORDER PIN	BAY - ORDER	Q	DRAW	RV	PG	Y	X	Z	REMARKS	LENGTH	EXCEPTIONS	RUN NUMBER
01DTR/LOGIC		A01N1		1-01 *							1				21
01DTR/LOGIC		A07P2		1-02 *											21
01DTR/LOGIC				1									5-4/8		21
01REQ TO SEND/CON		A07T2		1-01 *							2				22
01REQ TO SEND/CON		B07L2		1-02 *											22
01REQ TO SEND/CON				1									4-2/8		22
01REQ TO SEND/LOGIC		A01P1		1-01 *							1				23
01REQ TO SEND/LOGIC		A07S2		1-02 *											23
01REQ TO SEND/LOGIC				1									5-6/8		23
01RING/CON		A07K2		1-01 *							1				24
01RING/CON		B07M2		1-02 *											24
01RING/CON				1									5-2/8		24
01RING/LOGIC		A01M1		1-01 *							1				25
01RING/LOGIC		A07C1		1-02 *											25
01RING/LOGIC				1									5-6/8		25
01SEC RX/LOGIC		A01V1		1-01 *							1				26
01SEC RX/LOGIC		A07E1		1-02 *											26
01SEC RX/LOGIC				1									6-0/8		26
01SEC TX/LOGIC		A01U1		1-01 *							1				27
01SEC TX/LOGIC		A07U2		1-02 *											27
01SEC TX/LOGIC				1									5-4/8		27
01SUP REC/CON		A07L2		1-01 *							1				28
01SUP REC/CON		B07F1		1-02 *											28
01SUP REC/CON				1									4-6/8		28
01SUP TRAN/CON		A07U1		1-01 *							1				29
01SUP TRAN/CON		B07E1		1-02 *											29
01SUP TRAN/CON				1									3-4/8		29
02CARRIER/CON		A08H2		1-01 *							1				30
02CARRIER/CON		B08P2		1-02 *											30
02CARRIER/CON				1									5-6/8		30
02CARRIER/LOGIC		A01J2		1-01 *							1				31
02CARRIER/LOGIC		A08B1		1-02 *											31
02CARRIER/LOGIC				1									6-0/8		31
02CLEAR TO SEND/CON		A08M2		1-01 *							1				32
02CLEAR TO SEND/CON		B08K2		1-02 *											32
02CLEAR TO SEND/CON				1									4-6/8		32

DIGITAL EQUIPMENT CORPORATION

RUN NAME	A/P	PIN NAME	ORDER PIN	BAY - ORDER	Q	DRAW	RV	PG	Y	X	Z	REMARKS	LENGTH	EXCEPTIONS	RUN NUMBER
02CLEAR TO SEND/LOGIC		A01H2		1-01 *							1				33
02CLEAR TO SEND/LOGIC		A08F2		1-02 *											33
02CLEAR TO SEND/LOGIC				1									6-0/8		33
02DTR/CON		A08R2		1-01 *							1				34
02DTR/CON		B08R2		1-02 *											34
02DTR/CON				1									5-0/8		34
02DTR/LOGIC		A01E2		1-01 *							1				35
02DTR/LOGIC		A08P2		1-02 *											35
02DTR/LOGIC				1									6-2/8		35
02REQ TO SEND/CON		A08T2		1-01 *							2				36
02REQ TO SEND/CON		B08L2		1-02 *											36
02REQ TO SEND/CON				1									4-2/8		36
02REQ TO SEND/LOGIC		A01F2		1-01 *							1				37
02REQ TO SEND/LOGIC		A08S2		1-02 *											37
02REQ TO SEND/LOGIC				1									6-2/8		37
02RING/CON		A08K2		1-01 *							1				38
02RING/CON		B08M2		1-02 *											38
02RING/CON				1									5-2/8		38
02RING/LOGIC		A01D2		1-01 *							1				39
02RING/LOGIC		A08C1		1-02 *											39
02RING/LOGIC				1									5-4/8		39
02SEC RX LOGIC		A01L2		1-01 *							1				40
02SEC RX LOGIC		A08E1		1-02 *											40
02SEC RX LOGIC				1									5-6/8		40
02SEC TX LOGIC		A01K2		1-01 *							1				41
02SEC TX LOGIC		A08U2		1-02 *											41
02SEC TX LOGIC				1									6-2/8		41
02SUP REC/CON		A08L2		1-01 *							1				42
02SUP REC/CON		B08F1		1-02 *											42
02SUP REC/CON				1									4-6/8		42
02SUP TRAN/CON		A08U1		1-01 *							1				43
02SUP TRAN/CON		B08E1		1-02 *											43
02SUP TRAN/CON				1									3-4/8		43
03CARRIER/CON		A09H2		1-01 *							1				44
03CARRIER/CON		B09P2		1-02 *											44
03CARRIER/CON				1									5-6/8		44

DIGITAL EQUIPMENT CORPORATION

RUN NAME	A/P	PIN NAME	ORDER PIN	BAY - ORDER	Q	DRAW	RV	PG	Y	X	Z	REMARKS	LENGTH	EXCEPTIONS	RUN NUMBER
03CARRIER/LOGIC		A01S2		1-01 *							1				45
03CARRIER/LOGIC		A09B1		1-02 *											45
03CARRIER/LOGIC				1									7-0/8		45
03CLEAR TO SEND/CON		A09M2		1-01 *							1				46
03CLEAR TO SEND/CON		B09K2		1-02 *											46
03CLEAR TO SEND/CON				1									4-6/8		46
03CLEAR TO SEND/LOGIC		A01R2		1-01 *							1				47
03CLEAR TO SEND/LOGIC		A09F2		1-02 *											47
03CLEAR TO SEND/LOGIC				1									6-6/8		47
03DTR/CON		A09R2		1-01 *							1				48
03DTR/CON		B09R2		1-02 *											48
03DTR/CON				1									5-0/8		48
03DTR/LOGIC		A01N2		1-01 *							1				49
03DTR/LOGIC		A09P2		1-02 *											49
03DTR/LOGIC				1									6-2/8		49
03REQ TO SEND/CON		A09T2		1-01 *							2				50
03REQ TO SEND/CON		B09L2		1-02 *											50
03REQ TO SEND/CON				1									4-2/8		50
03REQ TO SEND/LOGIC		A01P2		1-01 *							1				51
03REQ TO SEND/LOGIC		A09S2		1-02 *											51
03REQ TO SEND/LOGIC				1									6-4/8		51
03RING/CON		A09K2		1-01 *							1				52
03RING/CON		B09M2		1-02 *											52
03RING/CON				1									5-2/8		52
03RING/LOGIC		A01M2		1-01 *							1				53
03RING/LOGIC		A09C1		1-02 *											53
03RING/LOGIC				1									6-4/8		53
03SEC RX/LOGIC		A01V2		1-01 *							1				54
03SEC RX/LOGIC		A09E1		1-02 *											54
03SEC RX/LOGIC				1									6-6/8		54
03SEC TX/LOGIC		A01U2		1-01 *							1				55
03SEC TX/LOGIC		A09U2		1-02 *											55
03SEC TX/LOGIC				1									6-2/8		55
03SUP REC/CON		A09L2		1-01 *							1				56
03SUP REC/CON		B09F1		1-02 *											56
03SUP REC/CON				1									4-6/8		56

digital EQUIPMENT CORPORATION

RUN NAME	A/P	PIN NAME	ORDER PIN	BAY - ORDER	Q	DRAW	RV	PG	Y	X	Z	REMARKS	LENGTH	EXCEPTIONS	RUN NUMBER
03SUP TRAN/CON		A09U1		1-01 *							1				57
03SUP TRAN/CON		B09E1		1-02 *											57
03SUP TRAN/CON				1									3-4/8		57
04CARRIER/CON		A10H2		1-01 *							1				58
04CARRIER/CON		B10P2		1-02 *											58
04CARRIER/CON				1									5-6/8		58
04CARRIER/LOGIC		A02J1		1-01 *							1				59
04CARRIER/LOGIC		A10B1		1-02 *											59
04CARRIER/LOGIC				1									6-6/8		59
04CLEAR TO SEND/CON		A10M2		1-01 *							1				60
04CLEAR TO SEND/CON		B10K2		1-02 *											60
04CLEAR TO SEND/CON				1									4-6/8		60
04CLEAR TO SEND/LOGIC		A02H1		1-01 *							1				61
04CLEAR TO SEND/LOGIC		A10F2		1-02 *											61
04CLEAR TO SEND/LOGIC				1									6-6/8		61
04DTR/CON		A10R2		1-01 *							1				62
04DTR/CON		B10R2		1-02 *											62
04DTR/CON				1									5-0/8		62
04DTR/LOGIC		A02E1		1-01 *							1				63
04DTR/LOGIC		A10P2		1-02 *											63
04DTR/LOGIC				1									7-0/8		63
04REQ TO SEND/CON		A10T2		1-01 *							2				64
04REQ TO SEND/CON		B10L2		1-02 *											64
04REQ TO SEND/CON				1									4-2/8		64
04REQ TO SEND/LOGIC		A02F1		1-01 *							1				65
04REQ TO SEND/LOGIC		A10S2		1-02 *											65
04REQ TO SEND/LOGIC				1									7-0/8		65
04RING/CON		A10K2		1-01 *							1				66
04RING/CON		B10M2		1-02 *											66
04RING/CON				1									5-2/8		66
04RING/LOGIC		A02D1		1-01 *							1				67
04RING/LOGIC		A10C1		1-02 *											67
04RING/LOGIC				1									6-2/8		67
04SEC RX/LOGIC		A02L1		1-01 *							1				68
04SEC RX/LOGIC		A10E1		1-02 *											68
04SEC RX/LOGIC				1									6-4/8		68

digital EQUIPMENT CORPORATION

RUN NAME	A/P	PIN NAME	ORDER PIN	BAY - ORDER	Q	DRAW	RV	PG	Y	X	Z	REMARKS	LENGTH	EXCEPTIONS	RUN NUMBER
04SEC TX/LOGIC		A02K1		1-01 *							1				69
04SEC TX/LOGIC		A10U2		1-02 *											69
04SEC TX/LOGIC				1									7-0/8		69
04SUP REC/CON		A10L2		1-01 *							1				70
04SUP REC/CON		B10F1		1-02 *											70
04SUP REC/CON				1									4-6/8		70
04SUP TRAN/CON		A10U1		1-01 *							1				71
04SUP TRAN/CON		B10E1		1-02 *											71
04SUP TRAN/CON				1									3-4/8		71
05 DTR/LOGIC		A02N1		1-01 *							1				72
05 DTR/LOGIC		A11P2		1-02 *											72
05 DTR/LOGIC				1									7-0/8		72
05CARRIER/CON		A11H2		1-01 *							1				73
05CARRIER/CON		B11P2		1-02 *											73
05CARRIER/CON				1									5-6/8		73
05CARRIER/LOGIC		A02S1		1-01 *							1				74
05CARRIER/LOGIC		A11B1		1-02 *											74
05CARRIER/LOGIC				1									7-6/8		74
05CLEAR TO SEND/CON		A11M2		1-01 *							1				75
05CLEAR TO SEND/CON		B11K2		1-02 *											75
05CLEAR TO SEND/CON				1									4-6/8		75
05CLEAR TO SEND/LOGIC		A02R1		1-01 *							1				76
05CLEAR TO SEND/LOGIC		A11F2		1-02 *											76
05CLEAR TO SEND/LOGIC				1									7-4/8		76
05DTR/CON		A11R2		1-01 *							1				77
05DTR/CON		B11R2		1-02 *											77
05DTR/CON				1									5-0/8		77
05REQ TO SEND/CON		A11T2		1-01 *							2				78
05REQ TO SEND/CON		B11L2		1-02 *											78
05REQ TO SEND/CON				1									4-2/8		78
05REQ TO SEND/LOGIC		A02P1		1-01 *							1				79
05REQ TO SEND/LOGIC		A11S2		1-02 *											79
05REQ TO SEND/LOGIC				1									7-2/8		79
05RING/CON		A11K2		1-01 *							1				80
05RING/CON		B11M2		1-02 *											80
05RING/CON				1									5-2/8		80

digital EQUIPMENT CORPORATION

RUN NAME	A/P	PIN NAME	ORDER PIN	BAY - ORDER	Q	DRAW	RV	PG	Y	X	Z	REMARKS	LENGTH	EXCEPTIONS	RUN NUMBER
05RING/LOGIC		A02M1		1-01 *							1				81
05RING/LOGIC		A11C1		1-02 *											81
05RING/LOGIC				1									7-2/8		81
05SEC RX/LOGIC		A02V1		1-01 *							1				82
05SEC RX/LOGIC		A11E1		1-02 *											82
05SEC RX/LOGIC				1									7-4/8		82
05SEC TX/LOGIC		A02U1		1-01 *							1				83
05SEC TX/LOGIC		A11U2		1-02 *											83
05SEC TX/LOGIC				1									7-0/8		83
05SUP REC/CON		A11L2		1-01 *							1				84
05SUP REC/CON		B11F1		1-02 *											84
05SUP REC/CON				1									4-6/8		84
05SUP TRAN/CON		A11U1		1-01 *							1				85
05SUP TRAN/CON		B11E1		1-02 *											85
05SUP TRAN/CON				1									3-4/8		85
06CARRIER/CON		A12H2		1-01 *							1				86
06CARRIER/CON		B12P2		1-02 *											86
06CARRIER/CON				1									5-6/8		86
06CARRIER/LOGIC		A02J2		1-01 *							1				87
06CARRIER/LOGIC		A12B1		1-02 *											87
06CARRIER/LOGIC				1									7-4/8		87
06CLEAR TO SEND/CON		A12M2		1-01 *							1				88
06CLEAR TO SEND/CON		B12K2		1-02 *											88
06CLEAR TO SEND/CON				1									4-6/8		88
06CLEAR TO SEND/LOGIC		A02H2		1-01 *							1				89
06CLEAR TO SEND/LOGIC		A12F2		1-02 *											89
06CLEAR TO SEND/LOGIC				1									7-4/8		89
06DTR/CON		A12R2		1-01 *							1				90
06DTR/CON		B12R2		1-02 *											90
06DTR/CON				1									5-0/8		90
06DTR/LOGIC		A02E2		1-01 *							1				91
06DTR/LOGIC		A12P2		1-02 *											91
06DTR/LOGIC				1									7-6/8		91
06REQ TO SEND/CON		A12T2		1-01 *							2				92
06REQ TO SEND/CON		B12L2		1-02 *											92
06REQ TO SEND/CON				1									4-2/8		92

digital EQUIPMENT CORPORATION

RUN NAME	A/P	PIN NAME	ORDER PIN	BAY - ORDER	Q	DRAW	RV	PG	Y	X	Z	REMARKS	LENGTH	EXCEPTIONS	RUN NUMBER
06REQ TO SEND/LOGIC		A02F2		1-01 *							1				93
06REQ TO SEND/LOGIC		A12S2		1-02 *											93
06REQ TO SEND/LOGIC				1									7-6/8		93
06RING/CON		A12K2		1-01 *							1				94
06RING/CON		B12M2		1-02 *											94
06RING/CON				1									5-2/8		94
06RING/LOGIC		A02D2		1-01 *							1				95
06RING/LOGIC		A12C1		1-02 *											95
06RING/LOGIC				1									7-0/8		95
06SEC RX/LOGIC		A02L2		1-01 *							1				96
06SEC RX/LOGIC		A12E1		1-02 *											96
06SEC RX/LOGIC				1									7-2/8		96
06SEC TX/LOGIC		A02K2		1-01 *							1				97
06SEC TX/LOGIC		A12U2		1-02 *											97
06SEC TX/LOGIC				1									7-6/8		97
06SUP REC/CON		A12L2		1-01 *							1				98
06SUP REC/CON		B12F1		1-02 *											98
06SUP REC/CON				1									4-6/8		98
06SUP TRAN/CON		A12U1		1-01 *							1				99
06SUP TRAN/CON		B12E1		1-02 *											99
06SUP TRAN/CON				1									3-4/8		99
07CARRIER/CON		A13H2		1-01 *							1				100
07CARRIER/CON		B13P2		1-02 *											100
07CARRIER/CON				1									5-6/8		100
07CARRIER/LOGIC		A02S2		1-01 *							1				101
07CARRIER/LOGIC		A13B1		1-02 *											101
07CARRIER/LOGIC				1									8-4/8		101
07CLEAR TO SEND/CON		A13M2		1-01 *							1				102
07CLEAR TO SEND/CON		B13K2		1-02 *											102
07CLEAR TO SEND/CON				1									4-6/8		102
07CLEAR TO SEND/LOGIC		A02R2		1-01 *							1				103
07CLEAR TO SEND/LOGIC		A13F2		1-02 *											103
07CLEAR TO SEND/LOGIC				1									8-2/8		103
07DTR/CON		A13R2		1-01 *							1				104
07DTR/CON		B13R2		1-02 *											104
07DTR/CON				1									5-0/8		104

Original EQUIPMENT CORPORATION

RUN NAME	A/P	PIN NAME	ORDER PIN	BAY - ORDER	Q	DRAW	RV	PG	Y	X	Z	REMARKS	LENGTH	EXCEPTIONS	RUN NUMBER
07DTR/LOGIC		A02N2		1-01 *							1				105
07DTR/LOGIC		A13P2		1-02 *											105
07DTR/LOGIC				1									7-6/8		105
07REQ TO SEND/CON		A13T2		1-01 *							2				106
07REQ TO SEND/CON		B13L2		1-02 *											106
07REQ TO SEND/CON				1									4-2/8		106
07REQ TO SEND/LOGIC		A02P2		1-01 *							1				107
07REQ TO SEND/LOGIC		A13S2		1-02 *											107
07REQ TO SEND/LOGIC				1									8-0/8		107
07RING/CON		A13K2		1-01 *							1				108
07RING/CON		B13M2		1-02 *											108
07RING/CON				1									5-2/8		108
07RING/LOGIC		A02M2		1-01 *							1				109
07RING/LOGIC		A13C1		1-02 *											109
07RING/LOGIC				1									8-0/8		109
07SEC RX/LOGIC		A02V2		1-01 *							1				110
07SEC RX/LOGIC		A13E1		1-02 *											110
07SEC RX/LOGIC				1									8-2/8		110
07SEC TX/LOGIC		A02U2		1-01 *							1				111
07SEC TX/LOGIC		A13U2		1-02 *											111
07SEC TX/LOGIC				1									7-6/8		111
07SUP REC/CON		A13L2		1-01 *							1				112
07SUP REC/CON		B13F1		1-02 *											112
07SUP REC/CON				1									4-6/8		112
07SUP TRAN/CON		A13U1		1-01 *							1				113
07SUP TRAN/CON		B13E1		1-02 *											113
07SUP TRAN/CON				1									3-4/8		113
08CARRIER/CON		A14H2		1-01 *							1				114
08CARRIER/CON		B14P2		1-02 *											114
08CARRIER/CON				1									5-6/8		114
08CARRIER/LOGIC		A03J1		1-01 *							1				115
08CARRIER/LOGIC		A14B1		1-02 *											115
08CARRIER/LOGIC				1									8-2/8		115
08CLEAR TO SEND/CON		A14M2		1-01 *							1				116
08CLEAR TO SEND/CON		B14K2		1-02 *											116
08CLEAR TO SEND/CON				1									4-6/8		116

EQUIPMENT CORPORATION

RUN NAME	A/P	PIN NAME	ORDER PIN	BAY - ORDER	W	DRAW	RV	PG	Y	X	Z	REMARKS	LENGTH	EXCEPTIONS	RUN NUMBER
08CLEAR TO SEND/LOGIC		A03H1		1-01 *							1				117
08CLEAR TO SEND/LOGIC		A14F2		1-02 *											117
08CLEAR TO SEND/LOGIC				1									8-2/8		117
08DTR/CON		A14R2		1-01 *							1				118
08DTR/CON		B14R2		1-02 *											118
08DTR/CON				1									5-0/8		118
08DTR/LOGIC		A03E1		1-01 *							1				119
08DTR/LOGIC		A14P2		1-02 *											119
08DTR/LOGIC				1									8-4/8		119
08REQ TO SEND/CON		A14T2		1-01 *							2				120
08REQ TO SEND/CON		B14L2		1-02 *											120
08REQ TO SEND/CON				1									4-2/8		120
08REQ TO SEND/LOGIC		A03F1		1-01 *							1				121
08REQ TO SEND/LOGIC		A14S2		1-02 *											121
08REQ TO SEND/LOGIC				1									8-4/8		121
08RING/CON		A14K2		1-01 *							1				122
08RING/CON		B14M2		1-02 *											122
08RING/CON				1									5-2/8		122
08RING/LOGIC		A03D1		1-01 *							1				123
08RING/LOGIC		A14C1		1-02 *											123
08RING/LOGIC				1									7-6/8		123
08SEC RX/LOGIC		A03L1		1-01 *							1				124
08SEC RX/LOGIC		A14E1		1-02 *											124
08SEC RX/LOGIC				1									8-0/8		124
08SEC TX/LOGIC		A03K1		1-01 *							1				125
08SEC TX/LOGIC		A14U2		1-02 *											125
08SEC TX/LOGIC				1									8-4/8		125
08SUP REC/CON		A14L2		1-01 *							1				126
08SUP REC/CON		B14F1		1-02 *											126
08SUP REC/CON				1									4-6/8		126
08SUP TRAN/CON		A14U1		1-01 *							1				127
08SUP TRAN/CON		B14E1		1-02 *											127
08SUP TRAN/CON				1									3-4/8		127
09CARRIER/CON		A15H2		1-01 *							1				128
09CARRIER/CON		B15P2		1-02 *											128
09CARRIER/CON				1									5-6/8		128

digital EQUIPMENT CORPORATION

RUN NAME	A/P	PIN NAME	ORDER PIN	BAY - ORDER	W	DRAW	RV	PG	Y	X	Z	REMARKS	LENGTH	EXCEPTIONS	RUN NUMBER
09CARRIER/LOGIC		A03S1		1-01 *							1				129
09CARRIER/LOGIC		A15B1		1-02 *											129
09CARRIER/LOGIC				1									9-2/8		129
09CLEAR TO SEND/CON		A15M2		1-01 *							1				130
09CLEAR TO SEND/CON		B15K2		1-02 *											130
09CLEAR TO SEND/CON				1									4-6/8		130
09CLEAR TO SEND/LOGIC		A03R1		1-01 *							1				131
09CLEAR TO SEND/LOGIC		A15F2		1-02 *											131
09CLEAR TO SEND/LOGIC				1									9-0/8		131
09DTR/CON		A15R2		1-01 *							1				132
09DTR/CON		B15R2		1-02 *											132
09DTR/CON				1									5-0/8		132
09DTR/LOGIC		A03N1		1-01 *							1				133
09DTR/LOGIC		A15P2		1-02 *											133
09DTR/LOGIC				1									8-4/8		133
09REQ TO SEND/CON		A15T2		1-01 *							2				134
09REQ TO SEND/CON		B15L2		1-02 *											134
09REQ TO SEND/CON				1									4-2/8		134
09REQ TO SEND/LOGIC		A03P1		1-01 *							1				135
09REQ TO SEND/LOGIC		A15S2		1-02 *											135
09REQ TO SEND/LOGIC				1									8-6/8		135
09RING/CON		A15K2		1-01 *							1				136
09RING/CON		B15M2		1-02 *											136
09RING/CON				1									5-2/8		136
09RING/LOGIC		A03M1		1-01 *							1				137
09RING/LOGIC		A15C1		1-02 *											137
09RING/LOGIC				1									8-6/8		137
09SEC RX/LOGIC		A03V1		1-01 *							1				138
09SEC RX/LOGIC		A15E1		1-02 *											138
09SEC RX/LOGIC				1									9-0/8		138
09SEC TX/LOGIC		A03U1		1-01 *							1				139
09SEC TX/LOGIC		A15U2		1-02 *											139
09SEC TX/LOGIC				1									8-4/8		139
09SUP REC/CON		A15L2		1-01 *							1				140
09SUP REC/CON		B15F1		1-02 *											140
09SUP REC/CON				1									4-6/8		140

digital EQUIPMENT CORPORATION

RUN NAME	A/P	PIN NAME	ORDER PIN	BAY - ORDER	Q	DRAW	RV	PG	Y	X	Z	REMARKS	LENGTH	EXCEPTIONS	RUN NUMBER
09SUP TRAN/CON		A15U1		1-01 *							1				141
09SUP TRAN/CON		B15E1		1-02 *											141
09SUP TRAN/CON				1									3-4/8		141
10AC2		A10T1		1-01 *							2				142
10AC2		A10C2		1-02 *							1				142
10AC2		A02C1		1-03 *											142
10AC2				1									10-4/8		142
10BC2		B10C2		1-01 *							1				143
10BC2		B10T1		1-02 *											143
10BC2				1									4-0/8		143
10CARRIER/CON		A16H2		1-01 *							1				144
10CARRIER/CON		B16P2		1-02 *											144
10CARRIER/CON				1									5-6/8		144
10CARRIER/LOGIC		A03J2		1-01 *							1				145
10CARRIER/LOGIC		A16B1		1-02 *											145
10CARRIER/LOGIC				1									9-0/8		145
10CLEAR TO SEND/CON		A16M2		1-01 *							1				146
10CLEAR TO SEND/CON		B16K2		1-02 *											146
10CLEAR TO SEND/CON				1									4-6/8		146
10CLEAR TO SEND/LOGIC		A03H2		1-01 *							1				147
10CLEAR TO SEND/LOGIC		A16F2		1-02 *											147
10CLEAR TO SEND/LOGIC				1									4-0/8		147
10DTR/CON		A16R2		1-01 *							1				148
10DTR/CON		B16R2		1-02 *											148
10DTR/CON				1									5-0/8		148
10DTR/LOGIC		A03E2		1-01 *							1				149
10DTR/LOGIC		A16P2		1-02 *											149
10DTR/LOGIC				1									9-2/8		149
10REQ TO SEND/CON		A16T2		1-01 *							2				150
10REQ TO SEND/CON		B16L2		1-02 *											150
10REQ TO SEND/CON				1									4-2/8		150
10REQ TO SEND/LOGIC		A03F2		1-01 *							1				151
10REQ TO SEND/LOGIC		A16S2		1-02 *											151
10REQ TO SEND/LOGIC				1									9-2/8		151

digital EQUIPMENT CORPORATION

RUN NAME	A/P	PIN NAME	ORDER PIN	BAY - ORDER	Q	DRAW	RV	PG	Y	X	Z	REMARKS	LENGTH	EXCEPTIONS	RUN NUMBER
10RING/CON		A16K2		1-01 *							1				152
10RING/CON		B16M2		1-02 *											152
10RING/CON				1									5-2/8		152
10RING/LOGIC		A03D2		1-01 *							1				153
10RING/LOGIC		A16C1		1-02 *											153
10RING/LOGIC				1									8-4/8		153
10SEC RX/LOGIC		A03L2		1-01 *							1				154
10SEC RX/LOGIC		A16E1		1-02 *											154
10SEC RX/LOGIC				1									8-6/8		154
10SEC TX/LOGIC		A03K2		1-01 *							1				155
10SEC TX/LOGIC		A16U2		1-02 *											155
10SEC TX/LOGIC				1									9-2/8		155
10SUP REC/CON		A16L2		1-01 *							1				156
10SUP REC/CON		B16F1		1-02 *											156
10SUP REC/CON				1									4-6/8		156
10SUP TRAN/CON		A16U1		1-01 *							1				157
10SUP TRAN/CON		B16E1		1-02 *											157
10SUP TRAN/CON				1									3-4/8		157
11AC2		A11C2		1-01 *							2				158
11AC2		A11T1		1-02 *							1				158
11AC2		A02T1		1-03 *											158
11AC2				1									10-6/8		158
11BC2		B11C2		1-01 *							1				159
11BC2		B11T1		1-02 *											159
11BC2				1									4-0/8		159
11CARRIER/CON		A17H2		1-01 *							1				160
11CARRIER/CON		B17P2		1-02 *											160
11CARRIER/CON				1									5-6/8		160
11CARRIER/LOGIC		A03S2		1-01 *							1				161
11CARRIER/LOGIC		A17B1		1-02 *											161
11CARRIER/LOGIC				1									10-0/8		161
11CLEAR TO SEND/CON		A17M2		1-01 *							1				162
11CLEAR TO SEND/CON		B17K2		1-02 *											162
11CLEAR TO SEND/CON				1									4-6/8		162

digital EQUIPMENT CORPORATION

RUN NAME	A/P	PIN NAME	ORDER PIN	BAY - ORDER	Q	DRAW	RV	PG	Y	X	Z	REMARKS	LENGTH	EXCEPTIONS	RUN NUMBER
11CLEAR TO SEND/LOGIC		A03K2		1-01 *							1				163
11CLEAR TO SEND/LOGIC		A17F2		1-02 *											163
11CLEAR TO SEND/LOGIC				1									9-6/8		163
11DTR/CON		A17K2		1-01 *							1				164
11DTR/CON		B17K2		1-02 *											164
11DTR/CON				1									5-0/8		164
11DTR/LOGIC		A03N2		1-01 *							1				165
11DTR/LOGIC		A17P2		1-02 *											165
11DTR/LOGIC				1									9-2/8		165
11REQ TO SEND/CON		A17T2		1-01 *							2				166
11REQ TO SEND/CON		B17L2		1-02 *											166
11REQ TO SEND/CON				1									4-2/8		166
11REQ TO SEND/LOGIC		A03P2		1-01 *							1				167
11REQ TO SEND/LOGIC		A17S2		1-02 *											167
11REQ TO SEND/LOGIC				1									9-4/8		167
11RING/CON		A17K2		1-01 *							1				168
11RING/CON		B17M2		1-02 *											168
11RING/CON				1									5-2/8		168
11RING/LOGIC		A03M2		1-01 *							1				169
11RING/LOGIC		A17C1		1-02 *											169
11RING/LOGIC				1									9-4/8		169
11SEC RX/LOGIC		A03V2		1-01 *							1				170
11SEC RX/LOGIC		A17E1		1-02 *											170
11SEC RX/LOGIC				1									9-6/8		170
11SEC TX/LOGIC		A03U2		1-01 *							1				171
11SEC TX/LOGIC		A17U2		1-02 *											171
11SEC TX/LOGIC				1									9-2/8		171
11SUP REC/CON		A17L2		1-01 *							1				172
11SUP REC/CON		B17F1		1-02 *											172
11SUP REC/CON				1									4-6/8		172
11SUP TRAN/CON		A17U1		1-01 *							1				173
11SUP TRAN/CON		B17E1		1-02 *											173
11SUP TRAN/CON				1									3-4/8		173

RUN NAME	A/P	PIN NAME	ORDER PIN	BAY - ORDER	Q	DRAW	RV	PG	Y	X	Z	REMARKS	LENGTH	EXCEPTIONS	RUN NUMBER
12AC2		A12T1		1-01 *							2				174
12AC2		A12C2		1-02 *							1				174
12AC2		A02C2		1-03 *											174
12AC2				1									11-2/8		174
12BC2		B12C2		1-01 *							1				175
12BC2		B12T1		1-02 *											175
12BC2				1									4-0/8		175
12CARRIER/CON		A18H2		1-01 *							1				176
12CARRIER/CON		B18P2		1-02 *											176
12CARRIER/CON				1									5-6/8		176
12CARRIER/LOGIC		A18B1		1-01 *							1				177
12CARRIER/LOGIC		B02J1		1-02 *											177
12CARRIER/LOGIC				1									11-6/8		177
12CLEAR TO SEND/CON		A18M2		1-01 *							1				178
12CLEAR TO SEND/CON		B18K2		1-02 *											178
12CLEAR TO SEND/CON				1									4-6/8		178
12CLEAR TO SEND/LOGIC		A18F2		1-01 *							1				179
12CLEAR TO SEND/LOGIC		B02H1		1-02 *											179
12CLEAR TO SEND/LOGIC				1									12-0/8		179
12DTR/CON		A18R2		1-01 *							1				180
12DTR/CON		B18R2		1-02 *											180
12DTR/CON				1									5-0/8		180
12DTR/LOGIC		A18P2		1-01 *							1				181
12DTR/LOGIC		B02E1		1-02 *											181
12DTR/LOGIC				1									11-2/8		181
12REQ TO SEND/CON		A18T2		1-01 *							2				182
12REQ TO SEND/CON		B18L2		1-02 *											182
12REQ TO SEND/CON				1									4-2/8		182
12REQ TO SEND/LOGIC		A18S2		1-01 *							1				183
12REQ TO SEND/LOGIC		B02F1		1-02 *											183
12REQ TO SEND/LOGIC				1									11-2/8		183
12RING/CON		A18K2		1-01 *							1				184
12RING/CON		B18M2		1-02 *											184
12RING/CON				1									5-2/8		184

RUN NAME	A/P	PIN NAME	ORDER PIN	BAY - ORDER	Q	DRAW	RV	PG	Y	X	Z	REMARKS	LENGTH	EXCEPTIONS	RUN NUMBER
12RING/LOGIC		A18C1		1-01 *							1				185
12RING/LOGIC		B02D1		1-02 *											185
12RING/LOGIC				1									11-4/8		185
12SEC RX/LOGIC		A18E1		1-01 *							1				186
12SEC RX/LOGIC		B02L1		1-02 *											186
12SEC RX/LOGIC				1									11-6/8		186
12SEC TX/LOGIC		A18U2		1-01 *							1				187
12SEC TX/LOGIC		B02K1		1-02 *											187
12SEC TX/LOGIC				1									11-2/8		187
12SUP REC/CON		A18L2		1-01 *							1				188
12SUP REC/CON		B18F1		1-02 *											188
12SUP REC/CON				1									4-6/8		188
12SUP TRAN/CON		A18U1		1-01 *							1				189
12SUP TRAN/CON		B18E1		1-02 *											189
12SUP TRAN/CON				1									3-4/8		189
13ACP		A13C2		1-01 *							2				190
13ACP		A13T1		1-02 *							1				190
13ACP		A02T2		1-03 *											190
13ACP				1									11-4/8		190
13BCP		B13C2		1-01 *							1				191
13BCP		B13T1		1-02 *											191
13BCP				1									4-0/8		191
13CARRIER/CON		A19H2		1-01 *							1				192
13CARRIER/CON		B19P2		1-02 *											192
13CARRIER/CON				1									5-6/8		192
13CARRIER/LOGIC		A19B1		1-01 *							1				193
13CARRIER/LOGIC		B02S1		1-02 *											193
13CARRIER/LOGIC				1									12-6/8		193
13CLEAR TO SEND/CON		A19M2		1-01 *							1				194
13CLEAR TO SEND/CON		B19K2		1-02 *											194
13CLEAR TO SEND/CON				1									4-6/8		194
13CLEAR TO SEND/LOGIC		A19F2		1-01 *							1				195
13CLEAR TO SEND/LOGIC		B02R1		1-02 *											195
13CLEAR TO SEND/LOGIC				1									12-6/8		195

RUN NAME	A/P	PIN NAME	ORDER PIN	BAY - ORDER	Q	DRAW	RV	PG	Y	X	Z	REMARKS	LENGTH	EXCEPTIONS	RUN NUMBER
13DTR/CON		A19R2		1-01 *							1				196
13DTR/CON		B19R2		1-02 *											196
13DTR/CON				1									5-0/8		196
13DTR/LOGIC		A19P2		1-01 *							1				197
13DTR/LOGIC		B02N1		1-02 *											197
13DTR/LOGIC				1									12-0/8		197
13REQ TO SEND/CON		A19T2		1-01 *							2				198
13REQ TO SEND/CON		B19L2		1-02 *											198
13REQ TO SEND/CON				1									4-2/8		198
13REQ TO SEND/LOGIC		A19S2		1-01 *							1				199
13REQ TO SEND/LOGIC		B02P1		1-02 *											199
13REQ TO SEND/LOGIC				1									12-2/8		199
13RING/CON		A19K2		1-01 *							1				200
13RING/CON		B19M2		1-02 *											200
13RING/CON				1									5-2/8		200
13RING/LOGIC		A19C1		1-01 *							1				201
13RING/LOGIC		B02M1		1-02 *											201
13RING/LOGIC				1									12-4/8		201
13SEC RX/LOGIC		A19E1		1-01 *							1				202
13SEC RX/LOGIC		B02V1		1-02 *											202
13SEC RX/LOGIC				1									12-4/8		202
13SEC TX/LOGIC		A19U2		1-01 *							1				203
13SEC TX/LOGIC		B02U1		1-02 *											203
13SEC TX/LOGIC				1									12-2/8		203
13SUP REC/CON		A19L2		1-01 *							1				204
13SUP REC/CON		B19F1		1-02 *											204
13SUP REC/CON				1									4-6/8		204
13SUP TRAN/CON		A19U1		1-01 *							1				205
13SUP TRAN/CON		B19E1		1-02 *											205
13SUP TRAN/CON				1									3-4/8		205
14ACP		A14T1		1-01 *							2				206
14ACP		A14C2		1-02 *							1				206
14ACP		A03C1		1-03 *											206
14ACP				1									12-0/8		206

RUN NAME	A/P	PIN NAME	ORDER PIN	BAY - ORDER	Q	DRAW	RV	PG	Y	X	Z	REMARKS	LENGTH	EXCEPTIONS	RUN NUMBER
14BC2		B14C2		1-01 *							1				207
14BC2		B14T1		1-02 *											207
14BC2				1									4-0/8		207
14CARRIER/CON		A20H2		1-01 *							1				208
14CARRIER/CON		B20P2		1-02 *											208
14CARRIER/CON				1									5-6/8		208
14CARRIER/LOGIC		A20B1		1-01 *							1				209
14CARRIER/LOGIC		B02J2		1-02 *											209
14CARRIER/LOGIC				1									12-4/8		209
14CLEAR TO SEND/CON		A20M2		1-01 *							1				210
14CLEAR TO SEND/CON		B20K2		1-02 *											210
14CLEAR TO SEND/CON				1									4-6/8		210
14CLEAR TO SEND/LOGIC		A20F2		1-01 *							1				211
14CLEAR TO SEND/LOGIC		B02H2		1-02 *											211
14CLEAR TO SEND/LOGIC				1									12-6/8		211
14DTR/CON		A20R2		1-01 *							1				212
14DTR/CON		B20R2		1-02 *											212
14DTR/CON				1									5-0/8		212
14DTR/LOGIC		A20P2		1-01 *							1				213
14DTR/LOGIC		B02E2		1-02 *											213
14DTR/LOGIC				1									12-0/8		213
14REQ TO SEND/CON		A20T2		1-01 *							2				214
14REQ TO SEND/CON		B20L2		1-02 *											214
14REQ TO SEND/CON				1									4-2/8		214
14REQ TO SEND/LOGIC		A20S2		1-01 *							1				215
14REQ TO SEND/LOGIC		B02F2		1-02 *											215
14REQ TO SEND/LOGIC				1									12-0/8		215
14RING/CON		A20K2		1-01 *							1				216
14RING/CON		B20M2		1-02 *											216
14RING/CON				1									5-2/8		216
14RING/LOGIC		A20C1		1-01 *							1				217
14RING/LOGIC		B02D2		1-02 *											217
14RING/LOGIC				1									12-2/8		217
14SEC RX/LOGIC		A20E1		1-01 *							1				218
14SEC RX/LOGIC		B02L2		1-02 *											218
14SEC RX/LOGIC				1									12-4/8		218

UNIVAC CORPORATION

RUN NAME	A/P	PIN NAME	ORDER PIN	BAY - ORDER	Q	DRAW	RV	PG	Y	X	Z	REMARKS	LENGTH	EXCEPTIONS	RUN NUMBER
14SEC TX/LOGIC		A20U2		1-01 *							1				219
14SEC TX/LOGIC		B02K2		1-02 *											219
14SEC TX/LOGIC				1									12-0/8		219
14SUP REC/CON		A20L2		1-01 *							1				220
14SUP REC/CON		B20F1		1-02 *											220
14SUP REC/CON				1									4-6/8		220
14SUP TX/CON		A20U1		1-01 *							1				221
14SUP TX/CON		B20E1		1-02 *											221
14SUP TX/CON				1									3-4/8		221
15AC2		A15C2		1-01 *							2				222
15AC2		A15T1		1-02 *							1				222
15AC2		A03T1		1-03 *											222
15AC2				1									12-2/8		222
15BC2		B15C2		1-01 *							1				223
15BC2		B15T1		1-02 *											223
15BC2				1									4-0/8		223
15CARRIER/CON		A21H2		1-01 *							1				224
15CARRIER/CON		B21P2		1-02 *											224
15CARRIER/CON				1									5-6/8		224
15CARRIER/LOGIC		A21B1		1-01 *							1				225
15CARRIER/LOGIC		B02S2		1-02 *											225
15CARRIER/LOGIC				1									13-4/8		225
15CLEAR TO SEND/CON		A21M2		1-01 *							1				226
15CLEAR TO SEND/CON		B21K2		1-02 *											226
15CLEAR TO SEND/CON				1									4-6/8		226
15CLEAR TO SEND/LOGIC		A21F2		1-01 *							1				227
15CLEAR TO SEND/LOGIC		B02R2		1-02 *											227
15CLEAR TO SEND/LOGIC				1									13-4/8		227
15DTR/CON		A21R2		1-01 *							1				228
15DTR/CON		B21R2		1-02 *											228
15DTR/CON				1									5-0/8		228
15DTR/LOGIC		A21P2		1-01 *							1				229
15DTR/LOGIC		B02N2		1-02 *											229
15DTR/LOGIC				1									12-6/8		229

UNIVAC CORPORATION

15RED TO SEND/CON	A5T15	T-01 *		5					230
15RED TO SEND/CON	B5T1F	T-02 *							230
15RED TO SEND/CON								4-2/8	230
15RED TO SEND/LOGIC	A5T2S	T-01 *		1					231
15RED TO SEND/LOGIC	B0P4S	T-02 *							231
15RED TO SEND/LOGIC								13-0/8	231
15RING/CON	A5TK5	T-01 *		1					232
15RING/CON	R5TM5	T-02 *							232
15RING/CON								5-2/8	232
15RING/LOGIC	A5TC7	T-01 *		1					233
15RING/LOGIC	B0PM5	T-02 *							233
15RING/LOGIC								13-2/8	233
15SUP REC/CON	A5T7F	T-01 *		1					234
15SUP REC/CON	B5T1F	T-02 *							234
15SUP REC/CON								4-6/8	234
15SUP REC/LOGIC	A5T3F	T-01 *		1					235
15SUP REC/LOGIC	B0PV5	T-02 *							235
15SUP REC/LOGIC								13-2/8	235
15SUP TRAN/CON	A5T0F	T-01 *		1					236
15SUP TRAN/CON	B5T3F	T-02 *							236
15SUP TRAN/CON								4-4/8	236
15SUP TRAN/LOGIC	A5T0S	T-01 *		1					237
15SUP TRAN/LOGIC	B0PU5	T-02 *							237
15SUP TRAN/LOGIC								13-0/8	237
17BPC	A7BPT	T-01 *		2					238
17BPC	A7PPC	T-02 *		1					238
17BPC	A0T3C	T-03 *							238
				1				12-6/8	238
17BPC	B7PPC	T-01 *		1					239
17BPC	B1PPT	T-02 *							239
								4-0/8	239
17ACC	A7BPC	T-01 *		2					240
17ACC	A7PTT	T-02 *		1					240
17ACC	A0T3S	T-03 *							240
				1				13-0/8	240

17BPC	B7BPC	T-01 *		1					241
17BPC	B1PPT	T-02 *							241
								4-0/8	241
17BPC	A7ACC	T-01 *		2					242
17BPC	A7PTT	T-02 *		1					242
17BPC	B0PC1	T-03 *							242
				1				15-0/8	242
17BPC	B7BPC	T-01 *		1					243
17BPC	B1PPT	T-02 *							243
								4-0/8	243
17ACC	A7BPC	T-01 *		2					244
17ACC	A7PTT	T-02 *		1					244
17ACC	B0PV5	T-03 *							244
				1				16-6/8	244
17BPC	B7BPC	T-01 *		1					245
17BPC	B1PPT	T-02 *							245
								4-0/8	245
17ACC	A7BPC	T-01 *		2					246
17ACC	A7PTT	T-02 *		1					246
17ACC	B0PC1	T-03 *							246
				1				15-0/8	246
17BPC	B7BPC	T-01 *		1					247
17BPC	B1PPT	T-02 *							247
								4-0/8	247
17ACC	A7BPC	T-01 *		2					248
17ACC	A7PTT	T-02 *		1					248
17ACC	B0PV5	T-03 *							248
				1				16-6/8	248
17BPC	B7BPC	T-01 *		1					249
17BPC	B1PPT	T-02 *							249
								4-0/8	249
17ACC	A7BPC	T-01 *		2					250
17ACC	A7PTT	T-02 *		1					250
17ACC	A0T4T	T-03 *							250
				1				4-0/8	250
17BPC	B7BPC	T-01 *		1					251
17BPC	B1PPT	T-02 *							251
17BPC	B0PT1	T-03 *							251
				1				16-6/8	251
17ACC	A7BPC	T-01 *		2					252
17ACC	A7PTT	T-02 *		1					252
17ACC	A0T4S	T-03 *							252
				1				4-0/8	252

RUN NAME	A/P	PIN NAME	ORDER PIN	BAY - ORDER	Q	DRAW	RV	PG	Y	X	Z	REMARKS	LENGTH	EXCEPTIONS	RUN NUMBER
4BC2		B01B1	B01A1	1-01 *							1				251
4BC2		B01A1		1-02 *							2				251
4BC2		B04C2		1-03 *							1				251
4BC2		B04T1		1-04 *											251
4BC2				1									10-6/8		251
5AC2		A05C2		1-01 *							1				252
5AC2		A05T1		1-02 *											252
5AC2				1									4-0/8		252
5BC2		B05C2		1-01 *							1				253
5BC2		B05T1		1-02 *											253
5BC2				1									4-0/8		253
6AC2		A06T1		1-01 *							2				254
6AC2		A06C2		1-02 *							1				254
6AC2		A01C1		1-03 *											254
6AC2				1									9-0/8		254
6BC2		B06C2		1-01 *							1				255
6BC2		B06T1		1-02 *											255
6BC2				1									4-0/8		255
7AC2		A07C2		1-01 *							2				256
7AC2		A07T1		1-02 *							1				256
7AC2		A01T1		1-03 *											256
7AC2				1									9-2/8		256
7BC2		B07C2		1-01 *							1				257
7BC2		B07T1		1-02 *											257
7BC2				1									4-0/8		257
8AC2		A08T1		1-01 *							2				258
8AC2		A08C2		1-02 *							1				258
8AC2		A01C2		1-03 *											258
8AC2				1									9-6/8		258
8BC2		B08C2		1-01 *							1				259
8BC2		B08T1		1-02 *											259
8BC2				1									4-0/8		259
9AC2		A09C2		1-01 *							2				260
9AC2		A09T1		1-02 *							1				260
9AC2		A01T2		1-03 *											260
9AC2				1									10-0/8		260

DIGITAL EQUIPMENT CORPORATION

RUN NAME	A/P	PIN NAME	ORDER PIN	BAY - ORDER	Q	DRAW	RV	PG	Y	X	Z	REMARKS	LENGTH	EXCEPTIONS	RUN NUMBER
9BC2		B09C2		1-01 *							1				261
9BC2		B09T1		1-02 *											261
9BC2				1									4-0/8		261
A22 GND		A22C2		1-01 *							1				262
A22 GND		A22T1		1-02 *											262
A22 GND				1									4-0/8		262
A23 GND		A23C2		1-01 *							1				263
A23 GND		A23T1		1-02 *											263
A23 GND				1									4-0/8		263
B22 GND		B22C2		1-01 *							1				264
B22 GND		B22T1		1-02 *											264
B22 GND				1									4-0/8		264
B23 GND		B23C2		1-01 *							1				265
B23 GND		B23T1		1-02 *											265
B23 GND				1									4-0/8		265
LINEOUR/CON		A06J2		1-01 *							1				266
LINEOUR/CON		B06F2		1-02 *							2				266
LINEOUR/CON		B04J2		1-03 *											266
LINEOUR/CON				1									8-2/8		266
LINEOUR/DIFCON		A06P1		1-01 *							2				267
LINEOUR/DIFCON		B06N1		1-02 *							1				267
LINEOUR/DIFCON		B22P1		1-03 *											267
LINEOUR/DIFCON				1									15-2/8		267
LINEOUR/DIFCON+		A06N1		1-01 *							2				268
LINEOUR/DIFCON+		B06J1		1-02 *							1				268
LINEOUR/DIFCON+		B22N1		1-03 *											268
LINEOUR/DIFCON+				1									15-0/8		268
LINEOUR/LOGIC		A06D1		1-01 *							2				269
LINEOUR/LOGIC		B03C1		1-02 *							1				269
LINEOUR/LOGIC		B01C1		1-03 *							2				269
LINEOUR/LOGIC		B04D1		1-04 *							1				269
LINEOUR/LOGIC		B22D1		1-05 *											269
LINEOUR/LOGIC				1									24-2/8		269
LINEOUT/CON		A06V1		1-01 *							2				270
LINEOUT/CON		B06L2		1-02 *							1				270
LINEOUT/CON		B04V1		1-03 *											270
LINEOUT/CON				1									8-0/8		270

DIGITAL EQUIPMENT CORPORATION

RUN NAME	A/P	PIN NAME	ORDER PIN	BAY - ORDER	Q	DRAW	RV	PG	Y	X	Z	REMARKS	LENGTH	EXCEPTIONS	RUN NUMBER
LINEOUT/DIFCON		A06M1		1-01 *							2				271
LINEOUT/DIFCON		B06D1		1-02 *							1				271
LINEOUT/DIFCON		B22M1		1-03 *											271
LINEOUT/DIFCON				1									14-6/8		271
LINEOUT/DIFCON+		A06L1		1-01 *							2				272
LINEOUT/DIFCON+		B06C1		1-02 *							1				272
LINEOUT/DIFCON+		B22L1		1-03 *											272
LINEOUT/DIFCON+				1									15-0/8		272
LINEOUT/LOGIC		A06V2		1-01 *							2				273
LINEOUT/LOGIC		B03D1		1-02 *							1				273
LINEOUT/LOGIC		B01D1		1-03 *							2				273
LINEOUT/LOGIC		B04V2		1-04 *							1				273
LINEOUT/LOGIC		B22V2		1-05 *											273
LINEOUT/LOGIC				1									23-6/8		273
LINE01R/CON		A07J2		1-01 *							2				274
LINE01R/CON		B07F2		1-02 *							1				274
LINE01R/CON		B04J1		1-03 *											274
LINE01R/CON				1									9-0/8		274
LINE01R/DIFCON		A07P1		1-01 *							2				275
LINE01R/DIFCON		B07N1		1-02 *							1				275
LINE01R/DIFCON		B22E2		1-03 *											275
LINE01R/DIFCON				1									15-2/8		275
LINE01R/DIFCON+		A07N1		1-01 *							2				276
LINE01R/DIFCON+		B07J1		1-02 *							1				276
LINE01R/DIFCON+		B22J1		1-03 *											276
LINE01R/DIFCON+				1									14-2/8		276
LINE01R/LOGIC		A07D1		1-01 *							2				277
LINE01R/LOGIC		B01E1		1-02 *							1				277
LINE01R/LOGIC		B03E1		1-03 *							2				277
LINE01R/LOGIC		B04K1		1-04 *							1				277
LINE01R/LOGIC		B22K1		1-05 *											277
LINE01R/LOGIC				1									24-2/8		277
LINE01T/CON		A07V1		1-01 *							2				278
LINE01T/CON		B07E2		1-02 *							1				278
LINE01T/CON		B04S1		1-03 *											278
LINE01T/CON				1									8-2/8		278

CORPORATION

RUN NAME	A/P	PIN NAME	ORDER PIN	BAY - ORDER	Q	DRAW	RV	PG	Y	X	Z	REMARKS	LENGTH	EXCEPTIONS	RUN NUMBER
LINE01T/DIFCON		A07M1		1-01 *							2				279
LINE01T/DIFCON		B07D1		1-02 *							1				279
LINE01T/DIFCON		B22L2		1-03 *											279
LINE01T/DIFCON				1									14-6/8		279
LINE01T/DIFCON+		A07L1		1-01 *							2				280
LINE01T/DIFCON+		B07C1		1-02 *							1				280
LINE01T/DIFCON+		B22S1		1-03 *											280
LINE01T/DIFCON+				1									14-6/8		280
LINE01T/LOGIC		A07V2		1-01 *							2				281
LINE01T/LOGIC		B03F1		1-02 *							1				281
LINE01T/LOGIC		B01F1		1-03 *							2				281
LINE01T/LOGIC		B04R1		1-04 *							1				281
LINE01T/LOGIC		B22R1		1-05 *											281
LINE01T/LOGIC				1									24-0/8		281
LINE02R/CON		A08J2		1-01 *							2				282
LINE02R/CON		B08F2		1-02 *							1				282
LINE02R/CON		B04F1		1-03 *											282
LINE02R/CON				1									9-2/8		282
LINE02R/DIFCON		A08P1		1-01 *							2				283
LINE02R/DIFCON		B08N1		1-02 *							1				283
LINE02R/DIFCON		B22H2		1-03 *											283
LINE02R/DIFCON				1									14-6/8		283
LINE02R/DIFCON+		A08N1		1-01 *							2				284
LINE02R/DIFCON+		B08J1		1-02 *							1				284
LINE02R/DIFCON+		B22F1		1-03 *											284
LINE02R/DIFCON+				1									14-0/8		284
LINE02R/LOGIC		B01H1		1-01 *							2				285
LINE02R/LOGIC		B03H1		1-02 *							1				285
LINE02R/LOGIC		B04H1		1-03 *							2				285
LINE02R/LOGIC		A08D1		1-04 *							1				285
LINE02R/LOGIC		B22H1		1-05 *											285
LINE02R/LOGIC				1									23-0/8		285
LINE02T/CON		A08V1		1-01 *							2				286
LINE02T/CON		B08E2		1-02 *							1				286
LINE02T/CON		B04U1		1-03 *											286
LINE02T/CON				1									8-6/8		286

CORPORATION

RUN NAME	A/P PIN NAME	ORDER PIN	HAY - ORDER	Q	DRAW RV PG Y	X	Z	REMARKS	LENGTH	EXCEPTIONS	RUN NUMBER
LINEDOT/DIFCON			1								
LINEDOT/DIFCON	A09MJ	1-01	*				2				295
LINEDOT/DIFCON	B09DJ	1-02	*				1				295
LINEDOT/DIFCON	B22K2	1-03	*								295
LINEDOT/DIFCON+			1						14-0/8		
LINEDOT/DIFCON+	A09L1	1-01	*				2				296
LINEDOT/DIFCON+	B09CJ	1-02	*				1				296
LINEDOT/DIFCON+	B22T2	1-03	*								296
LINEDOT/DIFCON			1						14-2/8		
LINEDOT/CON	A09L1	1-01	*				2				296
LINEDOT/CON	B03EJ	1-02	*				1				296
LINEDOT/CON	B04B1	1-03	*				2				297
LINEDOT/CON	A09VJ	1-04	*				1				297
LINEDOT/CON	B22B1	1-05	*								297
LINEDOT/CON			1						22-2/8		
LINEDOR/CON	A09J2	1-01	*				2				298
LINEDOR/CON	B0FE2	1-02	*				1				298
LINEDOR/CON	B0J2S	1-03	*								298
LINEDOR/CON			1						9-9/8		
LINEDOR/DIFCON	A09P1	1-01	*				2				299
LINEDOR/DIFCON	B0NE2	1-02	*				1				299
LINEDOR/DIFCON	B23P1	1-03	*								299
LINEDOR/DIFCON			1						13-9/8		
LINEDOR/DIFCON+	A0NJ1	1-01	*				2				300
LINEDOR/DIFCON+	B1DJ1	1-02	*				1				300
LINEDOR/DIFCON+	B2NJ1	1-03	*								300
LINEDOR/DIFCON+			1						13-4/8		
LINEDOR/LOGIC	B0JMJ	1-01	*				2				301
LINEDOR/LOGIC	B0EMJ	1-02	*				1				301
LINEDOR/LOGIC	B0DJ1	1-03	*				2				301
LINEDOR/LOGIC	A1DJ1	1-04	*				1				301
LINEDOR/LOGIC	B23D1	1-05	*								301
LINEDOR/LOGIC			1						23-2/8		
LINEDOT/CON	A1DA1	1-01	*				2				302
LINEDOT/CON	B0FE2	1-02	*				1				302
LINEDOT/CON	B0A1J	1-03	*								302
LINEDOT/CON			1						9-2/8		

RUN NAME	A/P PIN NAME	ORDER PIN	HAY - ORDER	Q	DRAW RV PG Y	X	Z	REMARKS	LENGTH	EXCEPTIONS	RUN NUMBER
LINEDOT/DIFCON	A08MJ	1-01	*				2				303
LINEDOT/DIFCON	B08DJ	1-02	*				1				303
LINEDOT/DIFCON	B2WJ2	1-03	*								303
LINEDOT/DIFCON			1						14-0/8		
LINEDOT/DIFCON+	A08AL1	1-01	*				2				304
LINEDOT/DIFCON+	B0BCJ	1-02	*				1				304
LINEDOT/DIFCON+	B22V1	1-03	*								304
LINEDOT/DIFCON+			1						14-4/8		
LINEDOT/LOGIC	A08V2	1-01	*				2				305
LINEDOT/LOGIC	B03J1	1-02	*				1				305
LINEDOT/LOGIC	B0TJ1	1-03	*				2				305
LINEDOT/LOGIC	B0HD2	1-04	*				1				305
LINEDOT/LOGIC	B22U2	1-05	*								305
LINEDOT/LOGIC			1						24-4/8		
LINEDOR/CON	A09J2	1-01	*				2				306
LINEDOR/CON	B09F2	1-02	*				1				306
LINEDOR/CON	B0H42	1-03	*								306
LINEDOR/CON			1						9-4/8		
LINEDOR/DIFCON	A09P1	1-01	*				2				307
LINEDOR/DIFCON	B09N1	1-02	*				1				307
LINEDOR/DIFCON	B22J2	1-03	*								307
LINEDOR/DIFCON			1						14-2/8		
LINEDOR/DIFCON+	A09N1	1-01	*				2				308
LINEDOR/DIFCON+	B09J1	1-02	*				1				308
LINEDOR/DIFCON+	B22K2	1-03	*								308
LINEDOR/DIFCON+			1						13-4/8		
LINEDOR/LOGIC	B0JK1	1-01	*				2				309
LINEDOR/LOGIC	B0EK1	1-02	*				1				309
LINEDOR/LOGIC	B0HB1	1-03	*				2				309
LINEDOR/LOGIC	A0HD1	1-04	*				1				309
LINEDOR/LOGIC	B22B1	1-05	*								309
LINEDOR/LOGIC			1						22-4/8		
LINEDOT/CON	A09V1	1-01	*				2				310
LINEDOT/CON	B0HE2	1-02	*				1				310
LINEDOT/CON	B0H12	1-03	*								310
LINEDOT/CON			1						9-6/8		

RUN NAME	A/P	PIN NAME	ORDER PIN	BAY - ORDER	Q	DRAW	RV	PG	Y	X	Z	REMARKS	LENGTH	EXCEPTIONS	RUN NUMBER
LINE04T/DIFCON		A10M1		1-01 *							2				303
LINE04T/DIFCON		B10D1		1-02 *							1				303
LINE04T/DIFCON		B23M1		1-03 *											303
LINE04T/DIFCON				1									13-2/8		303
LINE04T/DIFCON+		A10L1		1-01 *							2				304
LINE04T/DIFCON+		B10C1		1-02 *							1				304
LINE04T/DIFCON+		B23L1		1-03 *											304
LINE04T/DIFCON+				1									13-4/8		304
LINE04T/LOGIC		B01N1		1-01 *							2				305
LINE04T/LOGIC		B03N1		1-02 *							1				305
LINE04T/LOGIC		B05V2		1-03 *							2				305
LINE04T/LOGIC		A10V2		1-04 *							1				305
LINE04T/LOGIC		B23V2		1-05 *											305
LINE04T/LOGIC				1									23-4/8		305
LINE05R/CON		A11J2		1-01 *							2				306
LINE05R/CON		B11F2		1-02 *							1				306
LINE05R/CON		B05J1		1-03 *											306
LINE05R/CON				1									10-4/8		306
LINE05R/DIFCON		A11P1		1-01 *							2				307
LINE05R/DIFCON		B11N1		1-02 *							1				307
LINE05R/DIFCON		B23E2		1-03 *											307
LINE05R/DIFCON				1									13-6/8		307
LINE05R/DIFCON+		A11N1		1-01 *							2				308
LINE05R/DIFCON+		B11J1		1-02 *							1				308
LINE05R/DIFCON+		B23J1		1-03 *											308
LINE05R/DIFCON+				1									12-6/8		308
LINE05R/LOGIC		B01P1		1-01 *							2				309
LINE05R/LOGIC		B03P1		1-02 *							1				309
LINE05R/LOGIC		B05K1		1-03 *							2				309
LINE05R/LOGIC		A11D1		1-04 *							1				309
LINE05R/LOGIC		B23K1		1-05 *											309
LINE05R/LOGIC				1									23-4/8		309
LINE05T/CON		A11V1		1-01 *							2				310
LINE05T/CON		B11E2		1-02 *							1				310
LINE05T/CON		B05S1		1-03 *											310
LINE05T/CON				1									9-6/8		310

COMPUTER CORPORATION

RUN NAME	A/P	PIN NAME	ORDER PIN	BAY - ORDER	Q	DRAW	RV	PG	Y	X	Z	REMARKS	LENGTH	EXCEPTIONS	RUN NUMBER
LINE05T/DIFCON		A11M1		1-01 *							2				311
LINE05T/DIFCON		B11D1		1-02 *							1				311
LINE05T/DIFCON		B23L2		1-03 *											311
LINE05T/DIFCON				1									13-2/8		311
LINE05T/DIFCON+		A11L1		1-01 *							2				312
LINE05T/DIFCON+		B11C1		1-02 *							1				312
LINE05T/DIFCON+		B23S1		1-03 *											312
LINE05T/DIFCON+				1									13-2/8		312
LINE05T/LOGIC		B01R1		1-01 *							2				313
LINE05T/LOGIC		B03R1		1-02 *							1				313
LINE05T/LOGIC		B05R1		1-03 *							2				313
LINE05T/LOGIC		A11V2		1-04 *							1				313
LINE05T/LOGIC		B23R1		1-05 *											313
LINE05T/LOGIC				1									22-0/8		313
LINE06R/CON		A12J2		1-01 *							2				314
LINE06R/CON		B12F2		1-02 *							1				314
LINE06R/CON		B05F1		1-03 *											314
LINE06R/CON				1									10-6/8		314
LINE06R/DC		A12P1		1-01 *							2				315
LINE06R/DC		B12N1		1-02 *							1				315
LINE06R/DC		B23H2		1-03 *											315
LINE06R/DC				1									13-2/8		315
LINE06R/DIFCON+		A12N1		1-01 *							2				316
LINE06R/DIFCON+		B12J1		1-02 *							1				316
LINE06R/DIFCON+		B23F1		1-03 *											316
LINE06R/DIFCON+				1									12-4/8		316
LINE06R/LOGIC		B01S1		1-01 *							2				317
LINE06R/LOGIC		B03S1		1-02 *							1				317
LINE06R/LOGIC		B05H1		1-03 *							2				317
LINE06R/LOGIC		A12D1		1-04 *							1				317
LINE06R/LOGIC		B23H1		1-05 *											317
LINE06R/LOGIC				1									23-2/8		317
LINE06T/CON		A12V1		1-01 *							2				318
LINE06T/CON		B12E2		1-02 *							1				318
LINE06T/CON		B05U1		1-03 *											318
LINE06T/CON				1									10-2/8		318

COMPUTER CORPORATION

RUN NAME	A/P	PIN NAME	ORDER PIN	BAY - ORDER	Q	DRAW	RV	PG	Y	X	Z	REMARKS	LENGTH	EXCEPTIONS	RUN NUMBER
LINE06T/DIFCON		A12M1		1-01 *							2				319
LINE06T/DIFCON		B12D1		1-02 *							1				319
LINE06T/DIFCON		B23M2		1-03 *											319
LINE06T/DIFCON				1									12-4/8		319
LINE06T/DIFCON+		A12L1		1-01 *							2				320
LINE06T/DIFCON+		B12C1		1-02 *							1				320
LINE06T/DIFCON+		B23V1		1-03 *											320
LINE06T/DIFCON+				1									13-0/8		320
LINE06T/LOGIC		B01T1		1-01 *							2				321
LINE06T/LOGIC		B03T1		1-02 *							1				321
LINE06T/LOGIC		B05U2		1-03 *							2				321
LINE06T/LOGIC		A12V2		1-04 *							1				321
LINE06T/LOGIC		B23U2		1-05 *											321
LINE06T/LOGIC				1									22-4/8		321
LINE07R/CON		A13J2		1-01 *							2				322
LINE07R/CON		B13F2		1-02 *							1				322
LINE07R/CON		B05H2		1-03 *											322
LINE07R/CON				1									11-2/8		322
LINE07R/DIFCON		A13P1		1-01 *							2				323
LINE07R/DIFCON		B13N1		1-02 *							1				323
LINE07R/DIFCON		B23J2		1-03 *											323
LINE07R/DIFCON				1									12-6/8		323
LINE07R/DIFCON+		A13N1		1-01 *							2				324
LINE07R/DIFCON+		B13J1		1-02 *							1				324
LINE07R/DIFCON+		B23K2		1-03 *											324
LINE07R/DIFCON+				1									12-0/8		324
LINE07R/LOGIC		B03U1		1-01 *							2				325
LINE07R/LOGIC		B01U1		1-02 *							1				325
LINE07R/LOGIC		B05B1		1-03 *							2				325
LINE07R/LOGIC		A13D1		1-04 *							1				325
LINE07R/LOGIC		B23B1		1-05 *											326
LINE07R/LOGIC				1									24-4/8		325
LINE07T/CON		A13V1		1-01 *							2				326
LINE07T/CON		B13E2		1-02 *							1				326
LINE07T/CON		B05T2		1-03 *											326
LINE07T/CON				1									10-2/8		326

RUN NAME	A/P	PIN NAME	ORDER PIN	BAY - ORDER	Q	DRAW	RV	PG	Y	X	Z	REMARKS	LENGTH	EXCEPTIONS	RUN NUMBER
LINE07T/DIFCON		A13M1		1-01 *							2				327
LINE07T/DIFCON		B13D1		1-02 *							1				327
LINE07T/DIFCON		B23R2		1-03 *											327
LINE07T/DIFCON				1									12-4/8		327
LINE07T/DIFCON+		A13L1		1-01 *							2				328
LINE07T/DIFCON+		B13C1		1-02 *							1				328
LINE07T/DIFCON+		B23T2		1-03 *											328
LINE07T/DIFCON+				1									12-6/8		328
LINE07T/LOGIC		B01V1		1-01 *							2				329
LINE07T/LOGIC		B03V1		1-02 *							1				329
LINE07T/LOGIC		B05S2		1-03 *							2				329
LINE07T/LOGIC		A13V2		1-04 *							1				329
LINE07T/LOGIC		B23S2		1-05 *											329
LINE07T/LOGIC				1									22-6/8		329
LINE08R/CON		A04J2		1-01 *							1				330
LINE08R/CON		A14J2		1-02 *							2				330
LINE08R/CON		B14F2		1-03 *											330
LINE08R/CON				1									12-0/8		330
LINE08R/DIFCON		A22P1		1-01 *							1				331
LINE08R/DIFCON		A14P1		1-02 *							2				331
LINE08R/DIFCON		B14N1		1-03 *											331
LINE08R/DIFCON				1									11-2/8		331
LINE08R/DIFCON+		A22N1		1-01 *							1				332
LINE08R/DIFCON+		A14N1		1-02 *							2				332
LINE08R/DIFCON+		B14J1		1-03 *											332
LINE08R/DIFCON+				1									10-6/8		332
LINE08R/LOGIC		A22D1		1-01 *							1				333
LINE08R/LOGIC		A14D1		1-02 *							2				333
LINE08R/LOGIC		A04D1		1-03 *							1				333
LINE08R/LOGIC		B03C2		1-04 *							2				333
LINE08R/LOGIC		B01C2		1-05 *											333
LINE08R/LOGIC				1									22-0/8		333
LINE08T/CON		A04V1		1-01 *							1				334
LINE08T/CON		A14V1		1-02 *							2				334
LINE08T/CON		B14E2		1-03 *											334
LINE08T/CON				1									10-6/8		334

RUN NAME	A/P	PIN NAME	ORDER PIN	BAY - ORDER	Q	DRAW	RV	PG	Y	X	Z	REMARKS	LENGTH	EXCEPTIONS	RUN NUMBER
LINE08T/DIFCON		A22M1		1-01 *							1				335
LINE08T/DIFCON		A14M1		1-02 *							2				335
LINE08T/DIFCON		B14D1		1-03 *											335
LINE08T/DIFCON				1									10-4/8		335
LINE08T/DIFCON+		A22L1		1-01 *							1				336
LINE08T/DIFCON+		A14L1		1-02 *							2				336
LINE08T/DIFCON+		B14C1		1-03 *											336
LINE08T/DIFCON+				1									10-4/8		336
LINE08T/LOGIC		A22V2		1-01 *							2				337
LINE08T/LOGIC		A14V2		1-02 *							1				337
LINE08T/LOGIC		A04V2		1-03 *							2				337
LINE08T/LOGIC		B03D2		1-04 *							1				337
LINE08T/LOGIC		B01D2		1-05 *											337
LINE08T/LOGIC				1									20-2/8		337
LINE09R/CON		A04J1		1-01 *							1				338
LINE09R/CON		A15J2		1-02 *							2				338
LINE09R/CON		B15F2		1-03 *											338
LINE09R/CON				1									12-6/8		338
LINE09R/DIFCON		A22E2		1-01 *							1				339
LINE09R/DIFCON		A15P1		1-02 *							2				339
LINE09R/DIFCON		B15N1		1-03 *											339
LINE09R/DIFCON				1									11-4/8		339
LINE09R/DIFCON+		A22J1		1-01 *							1				340
LINE09R/DIFCON+		A15N1		1-02 *							2				340
LINE09R/DIFCON+		B15J1		1-03 *											340
LINE09R/DIFCON+				1									10-4/8		340
LINE09R/LOGIC		A22K1		1-01 *							2				341
LINE09R/LOGIC		A15D1		1-02 *							1				341
LINE09R/LOGIC		A04K1		1-03 *							2				341
LINE09R/LOGIC		B03E2		1-04 *							1				341
LINE09R/LOGIC		B01E2		1-05 *											341
LINE09R/LOGIC				1									22-2/8		341
LINE09T/CON		A04S1		1-01 *							1				342
LINE09T/CON		A15V1		1-02 *							2				342
LINE09T/CON		B15E2		1-03 *											342
LINE09T/CON				1									11-6/8		342

CORPORATION

RUN NAME	A/P	PIN NAME	ORDER PIN	BAY - ORDER	Q	DRAW	RV	PG	Y	X	Z	REMARKS	LENGTH	EXCEPTIONS	RUN NUMBER
LINE09T/DIFCON		A22L2		1-01 *							1				343
LINE09T/DIFCON		A15M1		1-02 *							2				343
LINE09T/DIFCON		B15D1		1-03 *											343
LINE09T/DIFCON				1									10-4/8		343
LINE09T/DIFCON+		A22S1		1-01 *							1				344
LINE09T/DIFCON+		A15L1		1-02 *							2				344
LINE09T/DIFCON+		B15C1		1-03 *											344
LINE09T/DIFCON+				1									10-2/8		344
LINE09T/LOGIC		A22R1		1-01 *							2				345
LINE09T/LOGIC		A15V2		1-02 *							1				345
LINE09T/LOGIC		A04R1		1-03 *							2				345
LINE09T/LOGIC		B03F2		1-04 *							1				345
LINE09T/LOGIC		B01F2		1-05 *											345
LINE09T/LOGIC				1									21-4/8		345
LINE10R/CON		A04F1		1-01 *							1				346
LINE10R/CON		A16J2		1-02 *							2				346
LINE10R/CON		B16F2		1-03 *											346
LINE10R/CON				1									13-4/8		346
LINE10R/DIFCON		A22H2		1-01 *							1				347
LINE10R/DIFCON		A16P1		1-02 *							2				347
LINE10R/DIFCON		B16N1		1-03 *											347
LINE10R/DIFCON				1									11-0/8		347
LINE10R/DIFCON+		A22F1		1-01 *							1				348
LINE10R/DIFCON+		A16N1		1-02 *							2				348
LINE10R/DIFCON+		B16J1		1-03 *											348
LINE10R/DIFCON+				1									10-2/8		348
LINE10R/LOGIC		A22H1		1-01 *							2				349
LINE10R/LOGIC		A16D1		1-02 *							1				349
LINE10R/LOGIC		A04H1		1-03 *							2				349
LINE10R/LOGIC		B03H2		1-04 *							1				349
LINE10R/LOGIC		B01H2		1-05 *											349
LINE10R/LOGIC				1									22-6/8		349
LINE10T/CON		A04U1		1-01 *							1				350
LINE10T/CON		A16V1		1-02 *							2				350
LINE10T/CON		B16E2		1-03 *											350
LINE10T/CON				1									12-0/8		350

EQUIPMENT CORPORATION

RUN NAME	A/P	PIN NAME	ORDER PIN	BAY - ORDER	Q	DRAW	RV	PG	Y	X	Z	REMARKS	LENGTH	EXCEPTIONS	RUN NUMBER
LINE10T/DIFCON		A22M2		1-01 *							1				351
LINE10T/DIFCON		A16M1		1-02 *							2				351
LINE10T/DIFCON		B16D1		1-03 *											351
LINE10T/DIFCON				1									9-6/8		351
LINE10T/DIFCON+		A16L1		1-01 *							2				352
LINE10T/DIFCON+		B16C1		1-02 *							1				352
LINE10T/DIFCON+		A22V1		1-03 *											352
LINE10T/DIFCON+				1									10-0/8		352
LINE10T/LOGIC		A22U2		1-01 *							2				353
LINE10T/LOGIC		A16V2		1-02 *							1				353
LINE10T/LOGIC		A04U2		1-03 *							2				353
LINE10T/LOGIC		B03J2		1-04 *							1				353
LINE10T/LOGIC		B01J2		1-05 *											353
LINE10T/LOGIC				1									21-2/8		353
LINE11R/CON		A04H2		1-01 *							1				354
LINE11R/CON		A17J2		1-02 *							2				354
LINE11R/CON		B17F2		1-03 *											354
LINE11R/CON				1									13-6/8		354
LINE11R/DIFCON		A22J2		1-01 *							1				355
LINE11R/DIFCON		A17P1		1-02 *							2				355
LINE11R/DIFCON		B17N1		1-03 *											355
LINE11R/DIFCON				1									10-4/8		355
LINE11R/DIFCON+		A22K2		1-01 *							1				356
LINE11R/DIFCON+		A17N1		1-02 *							2				356
LINE11R/DIFCON+		B17J1		1-03 *											356
LINE11R/DIFCON+				1									9-6/8		356
LINE11R/LOGIC		A22B1		1-01 *							2				357
LINE11R/LOGIC		A17D1		1-02 *							1				357
LINE11R/LOGIC		A04B1		1-03 *							2				357
LINE11R/LOGIC		B03K2		1-04 *							1				357
LINE11R/LOGIC		B01K2		1-05 *											357
LINE11R/LOGIC				1									23-4/8		357
LINE11T/CON		A04T2		1-01 *							1				358
LINE11T/CON		A17V1		1-02 *							2				358
LINE11T/CON		B17E2		1-03 *											358
LINE11T/CON				1									12-2/8		358

digital EQUIPMENT CORPORATION

RUN NAME	A/P	PIN NAME	ORDER PIN	BAY - ORDER	Q	DRAW	RV	PG	Y	X	Z	REMARKS	LENGTH	EXCEPTIONS	RUN NUMBER
LINE11T/DIFCON		A22R2		1-01 *							1				359
LINE11T/DIFCON		A17M1		1-02 *							2				359
LINE11T/DIFCON		B17D1		1-03 *											359
LINE11T/DIFCON				1									9-6/8		359
LINE11T/DIFCON+		A22T2		1-01 *							1				360
LINE11T/DIFCON+		A17L1		1-02 *							2				360
LINE11T/DIFCON+		B17C1		1-03 *											360
LINE11T/DIFCON+				1									9-6/8		360
LINE11T/LOGIC		A22S2		1-01 *							2				361
LINE11T/LOGIC		A17V2		1-02 *							1				361
LINE11T/LOGIC		A04S2		1-03 *							2				361
LINE11T/LOGIC		B03L2		1-04 *							1				361
LINE11T/LOGIC		B01L2		1-05 *											361
LINE11T/LOGIC				1									22-2/8		361
LINE12R/CON		A05J2		1-01 *							1				362
LINE12R/CON		A18J2		1-02 *							2				362
LINE12R/CON		B18F2		1-03 *											362
LINE12R/CON				1									13-4/8		362
LINE12R/DIFCON		A23P1		1-01 *							1				363
LINE12R/DIFCON		A18P1		1-02 *							2				363
LINE12R/DIFCON		B18N1		1-03 *											363
LINE12R/DIFCON				1									9-6/8		363
LINE12R/DIFCON+		A23N1		1-01 *							1				364
LINE12R/DIFCON+		A18N1		1-02 *							2				364
LINE12R/DIFCON+		B18J1		1-03 *											364
LINE12R/DIFCON+				1									9-2/8		364
LINE12R/LOGIC		A23D1		1-01 *							2				365
LINE12R/LOGIC		A18D1		1-02 *							1				365
LINE12R/LOGIC		A05D1		1-03 *							2				365
LINE12R/LOGIC		B03M2		1-04 *							1				365
LINE12R/LOGIC		B01M2		1-05 *											365
LINE12R/LOGIC				1									23-0/8		365
LINE12T/CON		A05V1		1-01 *							1				366
LINE12T/CON		A18V1		1-02 *							2				366
LINE12T/CON		B18E2		1-03 *											366
LINE12T/CON				1									12-2/8		366

digital EQUIPMENT CORPORATION

RUN NAME	A/P	PIN NAME	ORDER PIN	BAY - ORDER	Q	DRAW	RV	PG	Y	X	Z	REMARKS	LENGTH	EXCEPTIONS	RUN NUMBER
LINE12T/DIFCON		A23M1		1-01 *							1				367
LINE12T/DIFCON		A18M1		1-02 *							2				367
LINE12T/DIFCON		B18D1		1-03 *											367
LINE12T/DIFCON				1									9-0/8		367
LINE12T/DIFCON+		A23L1		1-01 *							1				368
LINE12T/DIFCON+		A18L1		1-02 *							2				368
LINE12T/DIFCON+		B18C1		1-03 *											368
LINE12T/DIFCON+				1									9-0/8		368
LINE12T/LOGIC		A23V2		1-01 *							2				369
LINE12T/LOGIC		A18V2		1-02 *							1				369
LINE12T/LOGIC		A05V2		1-03 *							2				369
LINE12T/LOGIC		B03N2		1-04 *							1				369
LINE12T/LOGIC		B01N2		1-05 *											369
LINE12T/LOGIC				1									21-4/8		369
LINE13R/CON		A05J1		1-01 *							1				370
LINE13R/CON		A19J2		1-02 *							2				370
LINE13R/CON		B19F2		1-03 *											370
LINE13R/CON				1									14-2/8		370
LINE13R/DIFCON		A23E2		1-01 *							1				371
LINE13R/DIFCON		A19P1		1-02 *							2				371
LINE13R/DIFCON		B19N1		1-03 *											371
LINE13R/DIFCON				1									10-0/8		371
LINE13R/DIFCON+		A23J1		1-01 *							1				372
LINE13R/DIFCON+		A19N1		1-02 *							2				372
LINE13R/DIFCON+		B19J1		1-03 *											372
LINE13R/DIFCON+				1									9-0/8		372
LINE13R/LOGIC		A23K1		1-01 *							2				373
LINE13R/LOGIC		A19D1		1-02 *							1				373
LINE13R/LOGIC		A05K1		1-03 *							2				373
LINE13R/LOGIC		B03P2		1-04 *							1				373
LINE13R/LOGIC		B01P2		1-05 *											373
LINE13R/LOGIC				1									23-4/8		373
LINE13T/CON		A05S1		1-01 *							1				374
LINE13T/CON		A19V1		1-02 *							2				374
LINE13T/CON		B19E2		1-03 *											374
LINE13T/CON				1									13-2/8		374

RUN NAME	A/P	PIN NAME	ORDER PIN	BAY - ORDER	Q	DRAW	RV	PG	Y	X	Z	REMARKS	LENGTH	EXCEPTIONS	RUN NUMBER
LINE13T/DIFCON		A23L2		1-01 *							1				375
LINE13T/DIFCON		A19M1		1-02 *							2				375
LINE13T/DIFCON		B19D1		1-03 *											375
LINE13T/DIFCON				1									9-0/8		375
LINE13T/DIFCON+		A23S1		1-01 *							1				376
LINE13T/DIFCON+		A19L1		1-02 *							2				376
LINE13T/DIFCON+		B19C1		1-03 *											376
LINE13T/DIFCON+				1									8-6/8		376
LINE13T/LOGIC		A23R1		1-01 *							2				377
LINE13T/LOGIC		A19V2		1-02 *							1				377
LINE13T/LOGIC		A05R1		1-03 *							2				377
LINE13T/LOGIC		B03R2		1-04 *							1				377
LINE13T/LOGIC		B01R2		1-05 *											377
LINE13T/LOGIC				1									22-6/8		377
LINE14R/CON		A05F1		1-01 *							1				378
LINE14R/CON		A20J2		1-02 *							2				378
LINE14R/CON		B20F2		1-03 *											378
LINE14R/CON				1									15-0/8		378
LINE14R/DIFCON		A23H2		1-01 *							1				379
LINE14R/DIFCON		A20P1		1-02 *							2				379
LINE14R/DIFCON		B20N1		1-03 *											379
LINE14R/DIFCON				1									9-4/8		379
LINE14R/DIFCON+		A23F1		1-01 *							1				380
LINE14R/DIFCON+		A20N1		1-02 *							2				380
LINE14R/DIFCON+		B20J1		1-03 *											380
LINE14R/DIFCON+				1									8-6/8		380
LINE14R/LOGIC		A23H1		1-01 *							2				381
LINE14R/LOGIC		A20D1		1-02 *							1				381
LINE14R/LOGIC		A05H1		1-03 *							2				381
LINE14R/LOGIC		B03S2		1-04 *							1				381
LINE14R/LOGIC		B01S2		1-05 *											381
LINE14R/LOGIC				1									24-0/8		381
LINE14T/CON		A05U1		1-01 *							1				382
LINE14T/CON		A20V1		1-02 *							2				382
LINE14T/CON		B20E2		1-03 *											382
LINE14T/CON				1									13-4/8		382

RUN NAME	A/P	PIN NAME	ORDER PIN	BAY - ORDER	Q	DRAW	RV	PG	Y	X	Z	REMARKS	LENGTH	EXCEPTIONS	RUN NUMBE
LINE14T/DIFCON		A23M2		1-01 *							1				383
LINE14T/DIFCON		A20M1		1-02 *							2				383
LINE14T/DIFCON		B20D1		1-03 *											383
LINE14T/DIFCON				1									8-2/8		383
LINE14T/DIFCON+		A20L1		1-01 *							2				384
LINE14T/DIFCON+		B20C1		1-02 *							1				384
LINE14T/DIFCON+		A23V1		1-03 *											384
LINE14T/DIFCON+				1									8-4/8		384
LINE14T/LOGIC		A23U2		1-01 *							2				385
LINE14T/LOGIC		A20V2		1-02 *							1				385
LINE14T/LOGIC		A05U2		1-03 *							2				385
LINE14T/LOGIC		B03T2		1-04 *							1				385
LINE14T/LOGIC		B01T2		1-05 *											385
LINE14T/LOGIC				1									22-2/8		385
LINE15R/CON		A05H2		1-01 *							1				386
LINE15R/CON		A21J2		1-02 *							2				386
LINE15R/CON		B21F2		1-03 *											386
LINE15R/CON				1									15-2/8		386
LINE15R/DIFCON		A23J2		1-01 *							2				387
LINE15R/DIFCON		A21P1		1-02 *							1				387
LINE15R/DIFCON		B21N1		1-03 *											387
LINE15R/DIFCON				1									9-0/8		387
LINE15R/DIFCON+		A23K2		1-01 *							2				388
LINE15R/DIFCON+		A21N1		1-02 *							1				388
LINE15R/DIFCON+		B21J1		1-03 *											388
LINE15R/DIFCON+				1									8-2/8		388
LINE15R/LOGIC		A23B1		1-01 *							2				389
LINE15R/LOGIC		A21D1		1-02 *							1				389
LINE15R/LOGIC		A05B1		1-03 *							2				389
LINE15R/LOGIC		B03U2		1-04 *							1				389
LINE15R/LOGIC		B01U2		1-05 *											389
LINE15R/LOGIC				1									24-4/8		389
LINE15T/CON		A05T2		1-01 *							1				390
LINE15T/CON		A21V1		1-02 *							2				390
LINE15T/CON		B21E2		1-03 *											390
LINE15T/CON				1									13-6/8		390

RUN NAME	A/P	PIN NAME	ORDER PIN	BAY - ORDER	Q	DRAW	RV	PG	Y	X	Z	REMARKS	LENGTH	EXCEPTIONS	RUN NUMBER
LINE15T/DIFCON		A23R2		1-01 *							1				391
LINE15T/DIFCON		A21M1		1-02 *							2				391
LINE15T/DIFCON		B21D1		1-03 *											391
LINE15T/DIFCON				1									8-2/8		391
LINE15T/DIFCON+		A23T2		1-01 *							1				392
LINE15T/DIFCON+		A21L1		1-02 *							2				392
LINE15T/DIFCON+		B21C1		1-03 *											392
LINE15T/DIFCON+				1									8-2/8		392
LINE15T/LOGIC		A23S2		1-01 *							2				393
LINE15T/LOGIC		A21V2		1-02 *							1				393
LINE15T/LOGIC		A05S2		1-03 *							2				393
LINE15T/LOGIC		B03V2		1-04 *							1				393
LINE15T/LOGIC		B01V2		1-05 *											393
LINE15T/LOGIC				1									23-2/8		393

DIGITAL EQUIPMENT CORPORATION
MAYNARD, MASSACHUSETTS

SOFTWARE LIST

MADE BY John McDamar	CHECKED	SECTION
DATE 2-21-73	DATE	
ENG	PROD	ISSUED SECT.
DATE 2-21-73	DATE	

LEGEND
- D DOCUMENT
- DN DOCUMENT CHANGE NOTICE
- PA PAPER TAPE ASCII
- PB PAPER TAPE BINARY
- PM PAPER TAPE READ-IN-MODE

ITEM NO.	DWG NO. / PART NO.	DESCRIPTION	DH11-AA	DH11-AB	DH11-AC	DH11-AD	DH11-AE			KIT CHECK BY ___ DATE ___	INSTALLATION CHECK BY ___ DATE ___
1.	MAINDEC-11-DZDHA-A-D	DH11 STATIC LOGIC TEST	1	1	1	1	1				
2.	MAINDEC-11-DZDHA-A-PB	DH11 STATIC LOGIC TEST	1	1	1	1	1				
3.	MAINDEC-11-DZDHB-A-D	DH11 MEMORY TEST	1	1	1	1	1				
4.	MAINDEC-11-DZDHB-A-PB	DH11 MEMORY TEST	1	1	1	1	1				
5.	MAINDEC-11-DZDHC-A-D	DH11 TRANSMITTER AND RECEIVER LOGIC TEST	1	1	1	1	1				
6.	MAINDEC-11-DZDHC-A-PB	DH11 TRANSMITTER AND RECEIVER LOGIC TEST	1	1	1	1	1				
7.	MAINDEC-11-DZDHD-A-D	DH11 SPEED SELECTION LOGIC TEST	1	1	1	1	1				
8.	MAINDEC-11-DZDHD-A-PB	DH11 SPEED SELECTION LOGIC TEST	1	1	1	1	1				
9.	MAINDEC-11-DZDHE-A-D	DH11 CHARACTER LENGTH AND BASIC DATA TEST	1	1	1	1	1				
10	MAINDEC-11-DZDHE-A-PB	DH11 CHARACTER LENGTH AND BASIC DATA TEST	1	1	1	1	1				
11	MAINDEC-11-DZDHF-A-D	DH11 SINGLE LINE DATA TEST	1	1	1	1	1				
12	MAINDEC-11-DZDHF-A-PB	DH11 SINGLE LINE DATA TEST	1	1	1	1	1				
13	MAINDEC-11-DZDHG-A-D	DH11 MULTI LINE DATA TEST	1	1	1	1	1				
14	MAINDEC-11-DZDHG-A-PB	DH11 MULTI LINE DATA TEST	1	1	1	1	1				
15	MAINDEC-11-DZDHH-A-D	DH11 AUTO-ECHO TEST	1	1	1	1	1				
16	MAINDEC-11-DZDHH-A-PB	DH11 AUTO-ECHO TEST	1	1	1	1	1				
17	MAINDEC-11-DZDHI-A-D	DH11 BREAK AND HALF-DUPLEX TEST	1	1	1	1	1				
18	MAINDEC-11-DZDHI-A-PB	DH11 BREAK AND HALF-DUPLEX TEST	1	1	1	1	1				
19	MAINDEC-11-DZDHJ-A-D	DH11 ON-LINE TEST	1	1	1	1					
20	MAINDEC-11-DZDHJ-A-PB	DH11 ON-LINE TEST	1	1	1	1	1				
21	MAINDEC-11-DXQLD-REV-D	DH11 COMMUNICATION EXERCISER LISTING	1	1	1	1	1				

TITLE	ASSY. NO.	SIZE	CODE	NUMBER	REV.	ECO NO
DH11 Software List	SHEET 1 OF 2	A	SL	DH11-0-7	A	DH11-00007
		DIST.				

DEC FORM NO. DEC 16 (327)-1049 N471
DRA 120

DIGITAL EQUIPMENT CORPORATION
MAYNARD, MASSACHUSETTS

SOFTWARE LIST

MADE BY John McDamar	CHECKED	SECTION
DATE 2-21-73	DATE	
ENG	PROD	ISSUED SECT.
DATE 2-21-73	DATE	

LEGEND
- D DOCUMENT
- DN DOCUMENT CHANGE NOTICE
- PA PAPER TAPE ASCII
- PB PAPER TAPE BINARY
- PM PAPER TAPE READ-IN-MODE

ITEM NO.	DWG NO. / PART NO.	DESCRIPTION	DH11-AA	DH11-AB	DH11-AC	DH11-AD	DH11-AE			KIT CHECK BY ___ DATE ___	INSTALLATION CHECK BY ___ DATE ___
22	MAINDEC-11-DXQLD-REV-PB	DH11 COMMUNICATION EXERCISER TAPE	1	1	1	1	1				
23	MAINDEC-11-DZDHK-A-D	DH11-AD MODEM CONTROL TEST	–	–	–	1	–				
24	MAINDEC-11-DZDHK-A-PB	DH11-AD MODEM CONTROL TEST	–			1					

TITLE	ASSY. NO.	SIZE	CODE	NUMBER	REV.	ECO NO
DH11 Software List	SHEET 2 OF 2	A	SL	DH11-0-7	A	
		DIST.				

DEC FORM NO. DEC 16 (327)-1049 N471
DRA 120

DIGITAL EQUIPMENT CORPORATION
MAYNARD, MASSACHUSETTS

ACCESSORY LIST

MADE BY J. MCNAMARA DATE 2-21-73	CHECKED D.GLEEZEN DATE 2-22-72	SECTION
ENG J. MCNAMARA DATE 2-21-73	PROD S. BORENSTEIN DATE 2-23-73	ISSUED SECT.

LEGEND
- D DOCUMENT
- DN DOCUMENT CHANGE NOTICE
- PA PAPER TAPE ASCII
- PB PAPER TAPE BINARY
- PM PAPER TAPE READ-IN-MODE

ITEM NO.	DWG NO./PART NO.	DESCRIPTION	QUANTITY/VARIATION DH11-AA	DH11-AB	DH11-AC	DH11-AD	DH11-AE			KIT CHECK BY ____ DATE ____	INSTALLATION CHECK BY ____ DATE ____
1.	DEC-11-HDHAA-B-D	DH11 Asynchronous 16-line Programmable Mux Manual	1	1	1	1	1				
2.	ZJ-114 -RB	Software (Libkit contains items listed on A-SL-DH11-0-7)	1	1	1	-	1				
3.	DH11 print set A	Customer Print Set (DH11 -AA,AB,AC.)	1	1	1	-	-				
4.	DH11 print set B	Customer Print Set (DH11-AD,AE)	-	-	-	1	1				
5.	ZJ179--RB	DH11-AD Software Kit (Contains Items Listed On A-SL-DH11-0-7)	-	-	-	1	-				
6.	T8611	M5906 Test Connector	-			2	2				
7.	T861	Modem Control Test Connector	-	-		1	-				
8.	T315	Distribution Panel Output Test Connector	-	-		1	1				

TITLE	ASSY. NO.	SIZE	CODE	NUMBER	REV.	ECO NO
DH11-A Acessory List	SHEET 1 OF 1	A	AL	DH11-0-6	D	DH11-00007

DIST.

DEC 16-(325)-1075-N17? DRA 121

"THIS DRAWING AND SPECIFICATIONS, HEREIN, ARE THE PROPERTY OF "DIGITAL EQUIPMENT" CORPORATION AND SHALL NOT BE REPRODUCED OR COPIED OR USED IN WHOLE OR IN PART AS THE BASIS FOR THE MANUFACTURE OR SALE OF ITEMS WITHOUT WRITTEN PERMISSION. COPYRIGHT © , DIGITAL EQUIPMENT CORPORATION"

LEGEND

NUMBER	DIM."X" VAR	DIM "Y" REF
BCØ8S-1	10.00IN.± 1.00IN.	1.00FT. ± 1.00IN.
BCØ8S-1B	14.00IN.± 1.00IN.	16.00IN ± 1.00IN.
BCØ8S-1K	2.00FT 9.00IN ±1.00IN	2.00FT 11.00IN ± 1.00IN
BCØ8S-5L	70.00IN.± 1.50IN.	72.00IN ± 1.50IN
BCØ8S-7	7.00FT. ± 2.00IN.	7.00FT. 2.00IN. ± 2.00IN.
BCØ8S-8	8.00FT. ± 2.00IN.	8.00FT. 2.00IN.± 2.00IN.
BCØ8S-9	9.00FT. ± 2.00IN.	9.00FT. 2.00IN.± 2.00IN
BCØ8S-1Ø	10.00FT. ± 2.00IN.	10.00FT. 2.00IN. ± 2.00IN.
BCØ8S-11	11.00FT. ± 3.00IN.	11.00FT. 2.00IN.± 3.00IN.
BCØ8S-12	12.00FT. ± 3.00IN.	12.00FT. 2.00IN. ± 3.00IN.
BCØ8S-13	13.00FT. ± 3.00IN.	13.00FT. 2.00IN. ± 3.00IN.
BCØ8S-14	14.00FT. ± 3.00IN.	14.00FT. 2.00IN. ± 3.00IN.
BCØ8S-15	15.00FT. +5.00IN -0.00IN	15.00FT. 2.00IN. +5.00IN -0.00IN.
BCØ8S-16	16.00FT. ± 3.00IN.	16.00FT. 2.00IN.± 3.00IN.
BCØ8S-17	17.00FT. ± 3.00IN.	17.00FT. 2.00IN.± 3.00IN.
BCØ8S-18	18.00FT. ± 3.00IN.	18.00FT. 2.00IN. ± 3.00IN.
BCØ8S-19	19.00FT. ± 3.00IN.	19.00FT. 2.00IN. ± 3.00IN.
BCØ8S-20	20.00FT. ± 3.00IN.	20.00FT. 2.00IN. ± 3.00IN.
BCØ8S-25	25.00FT. ± 3.00 FT.	25.00FT. 2.00IN. ± 3.00IN.
BCØ8S-30	30.00FT. ± 0.600 FT	30.00FT. 2.00IN. ± 0.600 FT
BCØ8S-35	35.00FT. ± 0.700 FT	35.00FT. 2.00IN. ± 0.700 FT.
BCØ8S-50	50.00FT. ± 1.000 FT	50.00FT. 2.00IN. ± 1.000 FT
BCØ8S-Z	Z.00 FT. ± 1.00 IN.	2.00 FT. 2.00 IN. ± 1.00 IN.

NOTES:

1. CONNECTORS P1 AND P2, ARE TO BE WIRED POINT TO POINT.
2. CONNECTOR LEGEND IDENTIFICATION TO BE PLACED ON SHIELD SIDE OF CABLE AT ONE END. AND WIRE SIDE OF CABLE ON THE OTHER END.
3. MUST BE ASSEMBLED TO PROCESS SPECIFITION 7606485-0-0.
4. INSPECTION AND TEST STAMPS TO BE PLACED AT EACH END OF THE CABLE ASSEMBLY.
5. THE NUMBER BCØ8S MUST BE ON THE CABLE IN CONJUNCTION WITH CONNECTOR LEGEND IDENTIFICATION.

B	A
D	C
F	E
J	H
L	K
N	M
R	P
T	S
V	U
X	W
Z	Y
BB	AA
DD	CC
FF	EE
JJ	HH
LL	KK
NN	MM
RR	PP
TT	SS
VV	UU

VIEW A-A
CONN. LEGEND REF

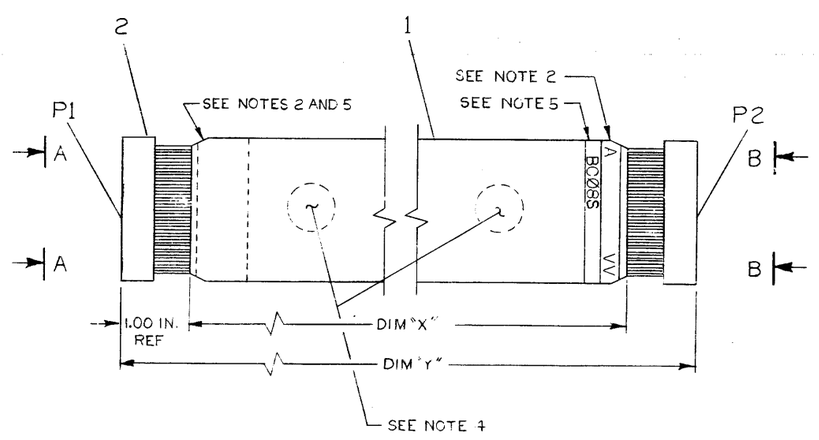

B	A
D	C
F	E
J	H
L	K
N	M
R	P
T	S
V	U
X	W
Z	Y
BB	AA
DD	CC
FF	EE
JJ	HH
LL	KK
NN	MM
RR	PP
TT	SS
VV	UU

VIEW B-B
CONN. LEGEND REF

2	CONNECTOR, 40 SOCKET	1211206	2
A/R	CABLE, FLAT 40 COND	1700084	1
	DESCRIPTION	DWG./PART NO.	ITEM NO.

UNLESS OTHERWISE SPECIFIED DIMENSIONS ARE IN INCHES

ANGLES ±0°30'	CLASS OF ASSEMBLY (CHECK ONE)						
SURFACE QUALITY IN ✓	MINIMUM	0.001	0.005	0.010	0.005	0.001	0.01
DIMENSIONS	PREFERRED	0.002	0.010	0.005	0.01	0.002	0.01

QUANTITY & VARIATION

THIRD ANGLE PROJECTION

REMOVE BURRS AND BREAK SHARP CORNERS

DO NOT SCALE DWG

MATERIAL

FINISH

DRN. J. FERQUSON 5-12-71
CHK'D D.K. CRABBE 5-13-71
ENG. D.K. CRABBE 5-13-71
PROD. ENG. R. JUDANSKI 5-20-71
PROD. P. FAZIO 5-21-71
NEXT HIGHER ASSY. A-PL-DR8-EA-Ø
SCALE NONE
SHEET 1 OF 1

FIRST USED ON LABØ-E

TITLE I/O CABLE ASS'Y (DIAG. JUMPER)

SIZE	CODE	NUMBER	REV.
D	IA	BCØ8S-0-0	N

DIST.

REVISIONS			
DWK	CHANGE NO.	REV.	
S.D.	BCØ8S-00001	M	REVISED AND REDRAWN
			S. HOLMES
	BCØ8S-00001	N	
			E.J. NEILMYER

"THIS DRAWING AND SPECIFICATIONS, HEREIN, ARE THE PROPERTY OF DIGITAL EQUIPMENT CORPORATION AND SHALL NOT BE REPRODUCED OR COPIED OR USED IN WHOLE OR IN PART AS THE BASIS FOR THE MANUFACTURE OR SALE OF ITEMS WITHOUT WRITTEN PERMISSION.
COPYRIGHT ©1973, DIGITAL EQUIPMENT CORPORATION"

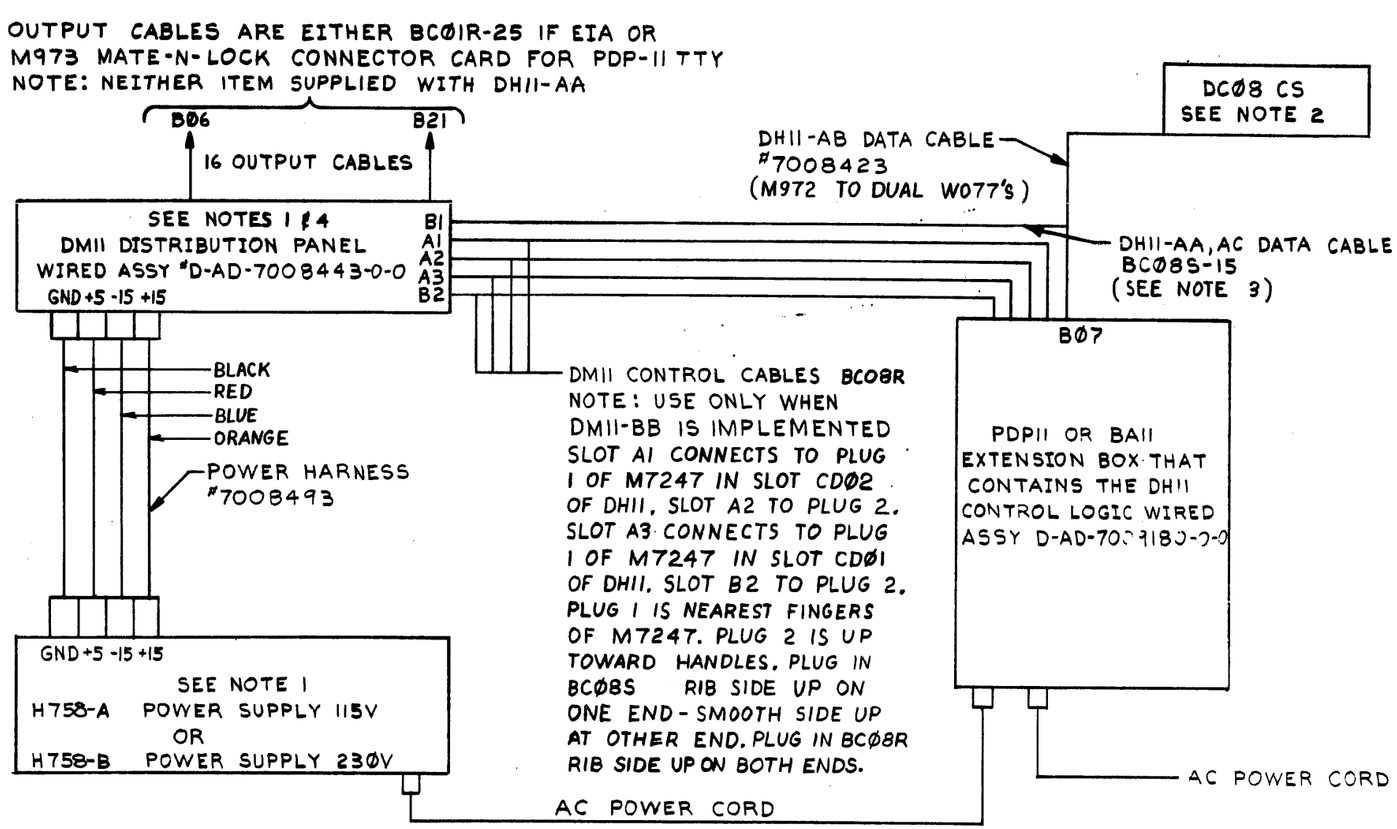

NOTES:

1. DISTRIBUTION PANEL 7008443 AND POWER SUPPLY H758 SUPPLIED ONLY WITH DH11-AA, DH11-AC
2. DCØ8 CS MUST BE ORDERED SEPARATELY DH11-AB DATA CABLE PLUGS INTO SLOTS A31, A32 OF DCØ8 CS FOR LINES ØØ TO LINE 15 OF DCØ8 CS. A SECOND DH11-AB PLUGS INTO THE DCØ8 CS AT SLOTS B31, B32 FOR LINES 16 TO 31. THE W077 CONNECTED TO SIDE 1 OF M972 GOES TO A31 (B31). W077 CONNECTED TO SIDE 2 OF M972 GOES TO A32 (B32).
3. A BCO8S IS WIRED STRAIGHT POINT TO POINT. A BCO8R IS WIRED MIRROR IMAGE: PIN A AT ONE END IS PIN VV AT OTHER END.
4. WIRED ASSY 7008443 PLUS POWER WIRING, END PANELS & HOLD DOWN BAR ADDED ON PRODUCTION FLOOR IS 7008456 LOGIC ASSY.
5. FOR DH11-AD, -AE OPTIONS, SEE SHEET 2.

REVISIONS			
CHK	CHANGE NO.	REV.	
	DH11-00002	A	
	J. MCNAMARA		
	DH11-00007	B	
	J. MCNAMARA		

FIRST USED ON OPTION/MODEL	QTY.	DESCRIPTION	PART NO.	ITEM NO.
DH11		PARTS LIST		

UNLESS OTHERWISE SPECIFIED DIMENSION IN INCHES
TOLERANCES
DECIMALS: .xxx = .005, .xx = .02, .x = .1
ANGLES: ±0° 30'
REMOVE BURRS AND BREAK SHARP CORNERS SURFACE QUALITY √
MATERIAL
FINISH

DRN. — DATE 1-23-73
CHK'D — DATE
ENG. — DATE 2-22-73
PROJ. ENG. — DATE 2-22-73
PROD. — DATE 2-23-73

NEXT HIGHER ASSY. B-DD-DH11-Ø
SCALE
SHEET 1 OF 2

digital EQUIPMENT CORPORATION MAYNARD, MASSACHUSETTS

TITLE INTERCONNECTION DH11

SIZE	CODE	NUMBER	REV.
C	IC	DH11-Ø-13	B

DIST.

DEC FORM NO. DRC 100-B

"THIS DRAWING AND SPECIFICATIONS, HEREIN, ARE THE PROPERTY OF DIGITAL EQUIPMENT CORPORATION AND SHALL NOT BE REPRODUCED OR COPIED OR USED IN WHOLE OR IN PART AS THE BASIS FOR THE MANUFACTURE OR SALE OF ITEMS WITHOUT WRITTEN PERMISSION.
COPYRIGHT © . DIGITAL EQUIPMENT CORPORATION"

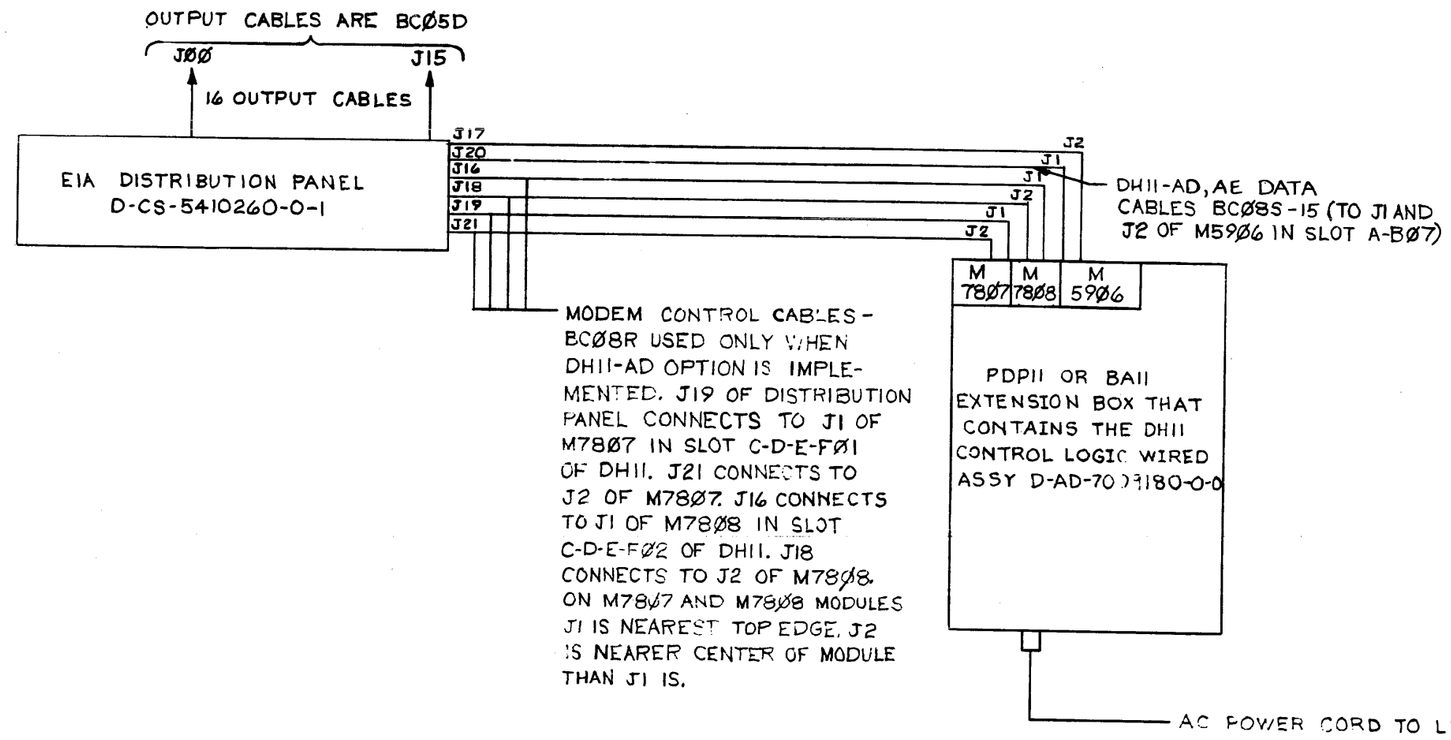

FIRST USED ON OPTION/MODEL	QTY.	DESCRIPTION	PART NO.	ITEM NO.
DH11		PARTS LIST		

UNLESS OTHERWISE SPECIFIED DIMENSION IN INCHES
TOLERANCES
DECIMALS: .xxx = .005, .xx = .02, .x = .1
ANGLES: ±0° 30'
REMOVE BURRS AND BREAK SHARP CORNERS SURFACE QUALITY √

MATERIAL —/—/—
FINISH —/—/—

		DATE
DRN.	R. PNDELHO	1-23-73
CHK'D.	H. GLEECE	2-22-73
ENG.	J. MCNAMARA	2-22-73
PROJ. ENG.	J. MCNAMARA	2-22-73
PROD.	J. BOOENSTEIN	2-23-73

NEXT HIGHER ASSY. B-DD-DH11-Ø
SCALE —/—/—
SHEET 2 OF 2

digital EQUIPMENT CORPORATION MAYNARD MASSACHUSETTS

TITLE INTERCONNECTION DH11

SIZE	CODE	NUMBER	REV.
C	IC	DH11-Ø-13	B

DIST.

REVISIONS: REV. | CHANGE NO. | CHK

DEC FORM NO. DRC 100-8

SIZE C CODE IC NUMBER DH11-Ø-13 REV. B

WIRE TABLE

ITEM NO	DESCRIPTION AWG	COLOR	FROM CONNECTION	WITH	TO CONNECTION	WITH	REMARKS
26	LOAD	Brown	T1-1	—	TB1-1	#17	
	LOAD	BLK/GRN	T1-2	—	TB1-2		
	LOAD	RED	T1-3	—	TB1-3		
	LOAD	WHT	T1-4	—	TB1-4		
	LOAD	VIO	T1-5	—	TB1-5		
26	LOAD	GRY	T1-6	—	TB1-6	#17	
33	#18	RED	P1-+15	SOLDER	J1-4	63	WIRE 4" LG
34	#18	BLK	P1-GND		J1-3	63	WIRE 4" LG
35	#18	ORN	P1-+15		J1-2	63	WIRE 4 1/2 LG
36	#18	BLU	P1-+15	SOLDER	J1-1	63	WIRE 4 1/2 LG
26	LOAD	—	T1-7	—	P1-7	SOLDER	
	LOAD	—	T1-8	—	P1-8		
	LOAD	—	T1-9	—	P1-9		
	LOAD	—	T1-10	—	P1-10		
26	LOAD	—	T1-11	—	P1-11	SOLDER	
50 & 6	LOAD	BRN	S1-A	—	S1-C	#17	SEE NOTE 5
	LOAD	BLK	S1-B	—	S1-D	#17	
38	#18	BLK	S1-B	#17	P1-B	SOL #30	
37	—	BRN	P1-BRN	—	F1-A	SOL #30	
45 & 38	—	BLU	P1-BLU	—	S1-A	#18	#17 FOR 230V.
13	#18	RED	TB1-1	#30	TB1-3	#30	PUSH ON WIRE ONLY
48	#18	RED	TB1-2	#30	TB1-6	#30	
38	#18	RED	TB1-2	#30	TB1-3	#30	PUSH ON WIRE ONLY
59 & 38	LOAD	GRN/YEL	P1-GRN/YEL	—	GND	#73	TO BE GROUNDED TO CHASSIS
34	#18	BLK	S1-D	#17	TB1-1	17	
32	#18	WHT	S1-C	#17	TB1-4	17	
34	#18	BLK	TB1-1	#17	FAN-1	SOL #30	
32	#18	WHT	TB1-2	#17	FAN-2	SOL #30	

WIRE TABLE

ITEM NO.	DESCRIPTION AWG	COLOR	FROM CONNECTION	WITH	TO CONNECTION	WITH	REMARKS
36	#18	BLU	TB2-15	#30	J2-1	#62	WIRE 4 1/2 LG
35	#18	ORN	TB2-15	#30	J2-2	#62	WIRE 4 1/2 LG
34	#18	BLK	TB2 GND	#30	J2-3	#62	WIRE 4 1/2 LG
33	#18	RED	TB2-15	#30	J2-4	#62	WIRE 4 1/2 LG

LEGEND

NUMBER	VARIATION
H758-A	115V 60 HZ
H758-B	230V 50 HZ

NOTES.

1. ITEM #6 ARE TO BE SUPPLIED AS LOOSE ITEMS.
2. FAN IS MOUNTED ON REAR SIDE OF CHASSIS DIRECTLY IN LINE WITH 3 TRANSISTORS.
3. ITEM #39 (DECAL LETTER "b") IS PLACED OVER LETTER "A" OF ITEM #2.
4. ITEM #40 (DECAL 230VAC 15A (H758B)) IS PLACED OVER (115 VAC 3A (H758A)).
5. 115 V VERSION LIGHT HAS TWO BLACK LEADS CONNECT ONE TO S1-C AND THE OTHER TO S1-D.
6. PAPER IS PEELED OFF ITEM #58, AND ITEM #58 IS PLACED STICKY SIDE DOWN WHERE INDICATED, DIRECTLY OVER SCREW HOLES.
7. MOUNT TERM #64 ON LOWER ROW OF TB1 PLACING ONE EACH ON LUGS 2,3,5 & 6 AND TWO EACH ON LUGS 1 & 4. ITEM #64 ON LUGS 1 & 4 SHOULD FACE IN OPPOSITE DIRECTIONS. ALSO MOUNT 2 ITEMS #72 FACING UP ON TERM 1 & 2 OF TOP ROW.
8. ITEM #70 USES 2 OF ITEMS 10 AND 11.

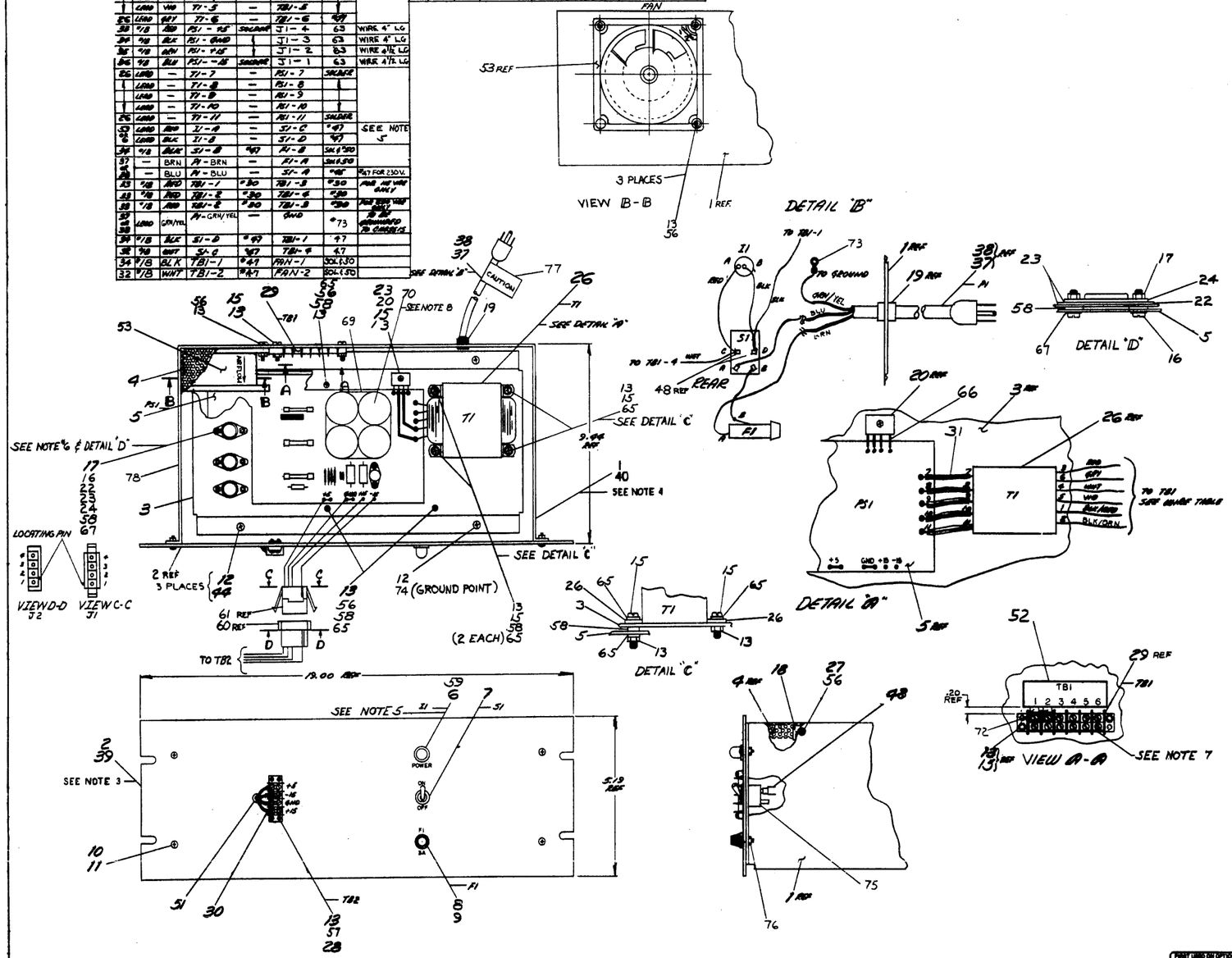

PART LIST OR OPTIONAL	QTY.	DESCRIPTION	PART NO	ITEM NO
H758		PARTS LIST		

EQUIPMENT CORPORATION

TITLE H758 POWER SUPPLY

SIZE E | CODE 1A | NUMBER H758-0-B | REV. L

DIGITAL EQUIPMENT CORPORATION
MAYNARD, MASSACHUSETTS

PARTS LIST

MADE BY John McNamara DATE 2-22-73	CHECKED K. GLEEZEN DATE 2-22-73	SECTION
ENG John McNamara DATE 2-22-73	PROD B. DIGREGORIO DATE 2-22-73	ISSUED SECT.

ITEM NO.	DWG NO./PART NO.	DESCRIPTION	QUANTITY/VARIATION											
			DH11-AA	DH11-AB	DH11-AC	DH11-AD	DH11-AE							
1.	M7277	Current Address and Address Select	1	1	1	1	1							
2.	M7278	Registers and Byte Count	1	1	1	1	1							
3.	M7279	FIFO Buffer	1	1	1	1	1							
4.	M7280	Multiple UARTs	2	2	2	2	2							
5.	M7288	Line Parameter Control	1	1	1	1	1							
6.	M7289	System Control and Receiver Scan	1	1	1	1	1							
7.	G7360	Priority Selector	1	1	1	-	-							
8.	5408778	Priority Jumper Plug-Level #5	2	2	2	2	2							
9.	M4540	DH11 DC11 Clock	1	1	1	1	1							
10.	M7821	Interrupt Control	2	2	2	2	2							
11.	M796	Unibus Master Control	1	1	1	1	1							
12.	M920	Internal Bus Connector	1	1	1	1	1							
13.	M971	Cable Interface	2	-	2	-	-							
14.	M974	DM11 Maintenance Jumper	1	1	1	-	-							
15.	G727	Grant Continuity Card	1	1	1	1	1							
16	M5906	EIA CONVERSION AND PRIORITY SELECTION	-	-	-	1	1							
17	M7807	BUS CONTROL+MUX (MODEM CONTROL)	-	-	-	1	-							
18	M7808	MODEM CONTROL	-	-	-	1	-							

TITLE DH11 Module Utilization (PL)	ASSY NO. B-DD-DH11-Ø	SIZE A	CODE PL	NUMBER DH11-Ø-3	REV. D	ECO NO. DH11-0007
	SHEET 1 OF 1	DIST.				

DEC FORM DEC 16-(325)-1031-N870
DRA 110

This drawing and specifications, herein, are the property of Digital Equipment Corporation and shall not be reproduced or copied or used in whole or in part as the basis for the manufacture or sale of items without written permission. COPYRIGHT © 1973
DIGITAL EQUIPMENT CORPORATION

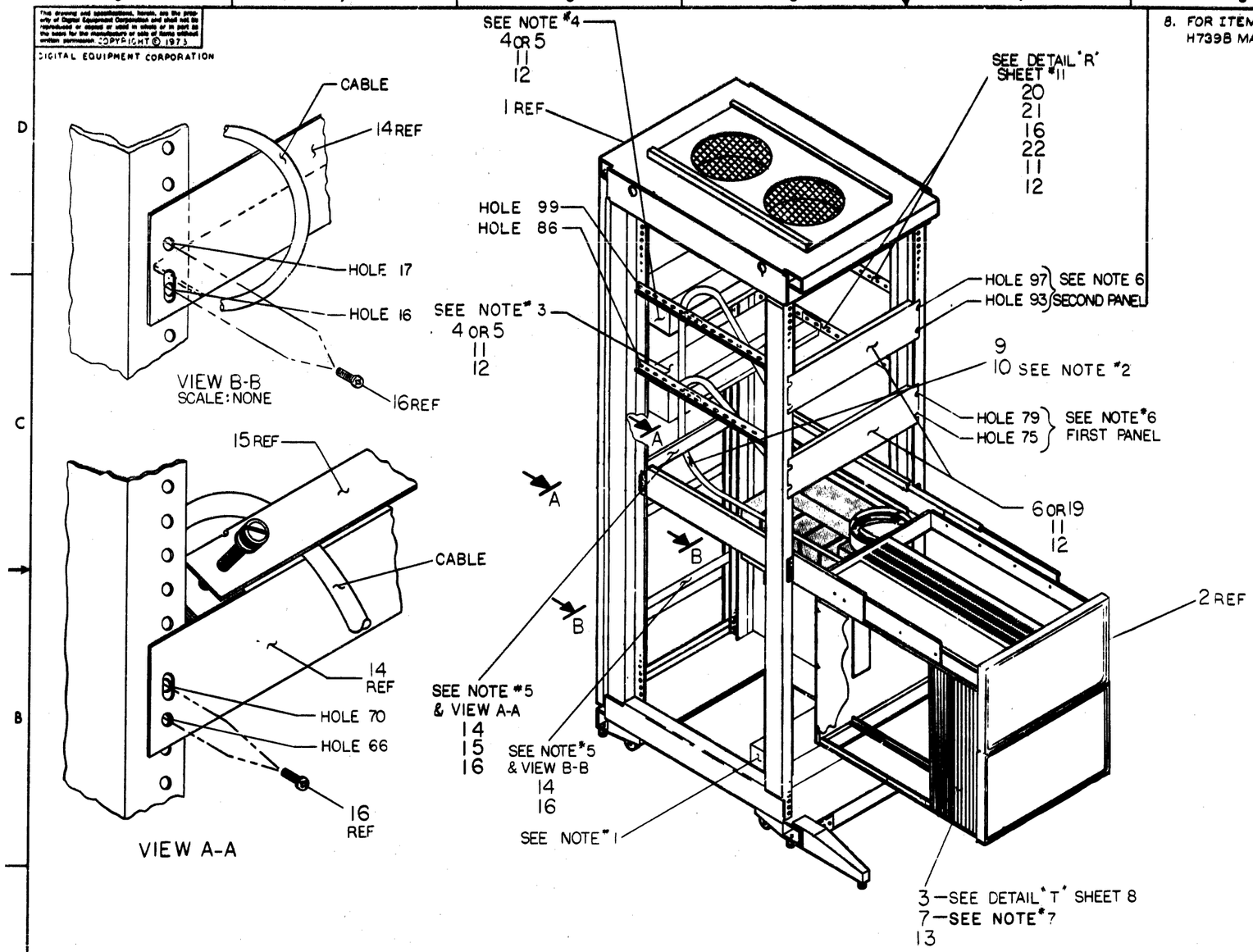

8. FOR ITEMS 4 & 5 H739A AND H739B MAY BE SUBSTITUTED.

NOTES:

1. 861 POWER CONTROL MUST BE LOCATED AT FRONT OF CABINET TO ALLOW CABLES FROM ITEM 6 OR 19 TO SWEEP BEHIND AND UNDER ITEM 2.
2. ITEM #10 IS USED WHEN A DM11-BB IS INSTALLED, OR WITH A DH11-AD.
3. INSTALL THIS POWER SUPPLY FOR FIRST DH11, HOLES 75, 79.
4. INSTALL THIS POWER SUPPLY FOR SECOND DH11, HOLES 93, 97.
5. EACH H960 CONTAINING A DH11 SHALL HAVE ONE STRAIN RELIEF (ITEM 14) AND CLAMP (ITEM 15) FOR BC08R+S CABLES AND ONE STRAIN RELIEF AT THE LOWER REAR OF CABINET, SEE VIEW "A-A" AND "B-B". RETURN EXTRA ITEMS 14+15 TO STOCKROOM.
6. A CABINET THAT CONTAINS AN EXPANDER BOX CANNOT HAVE MORE THAN TWO DISTRIBUTION PANELS (ITEMS 6 OR 19). FOR DH11 SYSTEMS WITH THREE OR MORE DISTRIBUTION PANELS, A SEPARATE CABINET MUST BE USED. UP TO FOUR PANELS CAN BE MOUNTED INTO CABINETS WITHOUT AN EXPANDER BOX.
7. FOR 11/35-11/40 CPU WITH SERIAL NO. LESS THAN 6000 OR H960-D,E WITH SERIAL NO. LESS THAN 7000 USE POWER HARNESS 7009466.

DH11-AE	DH11-AD	DH11-AB	DH11-AC	DH11-AA			
4	4	4	4	4	SCR. PHIL PAN HD 8-32X3/8	9006037-1	24
1	1	1	1	1	SUPPORT HARNESS	7010167	23
4	4	-	4	4	WASHER, LOCK #10 EXT.	9007651	22
1	1	-	1	1	CROSS BAR CABLE BKT.	D-MD-7408510-0-0	21
2	2	-	2	2	SIDE BAR SUPPORT	C-IA-7408283-0-0	20
1	1	-	-	-	H317-B CABLE BOX ASSY	D-UA-H317-0-0	19
8	8	8	8	8	WASHER, LOCK #8 EXT TOOTH	9008072	18
-	-	1	-	-	M972 TO DUAL W077 CABLE	D-IA-7008423-0-0	17
4	4	-	4	4	SCR, PHL PAN HD 10-32 X 3/8 LG	9006071	16
1	1	-	1	1	CLAMP, STRAIN RELIEF	C-IA-7411633-0-0	15
1	1	-	1	1	STRAIN RELIEF	C-IA-7411632-0-0	14
4	4	4	4	4	SCR PHL PAN HD #8-32-1 LG	9006043-1	13
8	8	-	12	12	SCR PHL PAN HD #10-32-5/8 LG	9006074-1	12
8	8	-	12	12	NUT, TINNERMAN #10-32	9007786	11
-	4	-	REF	REF	I/O CABLE (BC08R) (NOTE 2)	C-UA-BC08R-0-0	10
2	2	-	1	1	I/O CABLE ASSY (BC08S)	C-IA-BC08S-15-0	9
-	-	-	1	1	POWER HARNESS	D-IA-7008493-0-0	8
1	1	1	1	1	DH11 OPTION HARNESS	D-IA-7009561-0-0	7
-	-	-	1	1	LOGIC ASSY	C-IA-7008456-0-0	6
-	-	-	1	-	POWER SUPPLY (NOTE 8)	D-UA-H758-B-0	5
-	-	-	-	1	POWER SUPPLY (NOTE 8)	D-UA-H758-A-0	4
1	1	1	1	1	WIRED ASSY (DH11)	D-AD-7009180-0-0	3
REF	REF	REF	REF	REF	MOUNTING BOX ASSY	D-UA-BA11-FC-0	2
REF	REF	REF	REF	REF	H960 CABINET	D-UA-H960-CD-0	1
FIRST USED ON OPTION/MODEL					QTY.	DESCRIPTION	PART NO. / ITEM NO.

PDP 11 — PARTS LIST

REVISIONS				
CHK.	CHANGE NO.	REV		
2-21	DH11-00002	A	J. MCNAMARA	9-11-73
2-21	DH11-00004	B	J. MCNAMARA	1-8-74
2-21	DH11-00006	C	J. MCNAMARA	2-20-74
2-21	DH11-00007	D	J. MCNAMARA	10-22-74
2-26	DH11-00009	E	B. MINOR	1-10-75
2-23	DH11-00010	F	J. MCNAMARA	22-OCT-75
			J. MCNAMARA	23-OCT-75

UNLESS OTHERWISE SPECIFIED DIMENSION IN INCHES. TOLERANCES
DECIMALS .XXX = .005 .XX = .02 .X = .1
ANGLES ±0° 30'
REMOVE BURRS AND BREAK SHARP CORNERS. SURFACE QUALITY
MATERIAL
FINISH

DRAWN — DATE 2-12-73
CHECKED — DATE 2-21-73
ENGINEER — DATE 2-21-73
MFG. — DATE 2-22-73
APPD. — DATE 2-23-73

NEXT HIGHER ASSY. B-DD-DH11-0
SCALE
SHEET 1 OF 14

[redacted] EQUIPMENT CORPORATION
MAYNARD, MASSACHUSETTS

TITLE
BASIC ASSY
DH11 IN H960

SIZE	CODE	NUMBER	REV.
D	UA	DH11-0-0	F

DIST.

"THE DRAWING AND SPECIFICATIONS HEREIN ARE THE PROPERTY OF DIGITAL EQUIPMENT CORPORATION AND SHALL NOT BE REPRODUCED OR COPIED OR USED IN WHOLE OR IN PART AT THE BASIS FOR THE MANUFACTURE OR SALE WITHOUT WRITTEN PERMISSION
COPYRIGHT © 1973 DIGITAL EQUIPMENT CORPORATION"

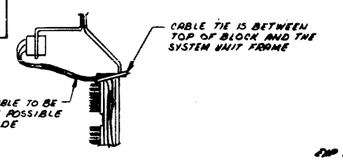

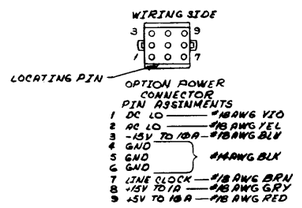

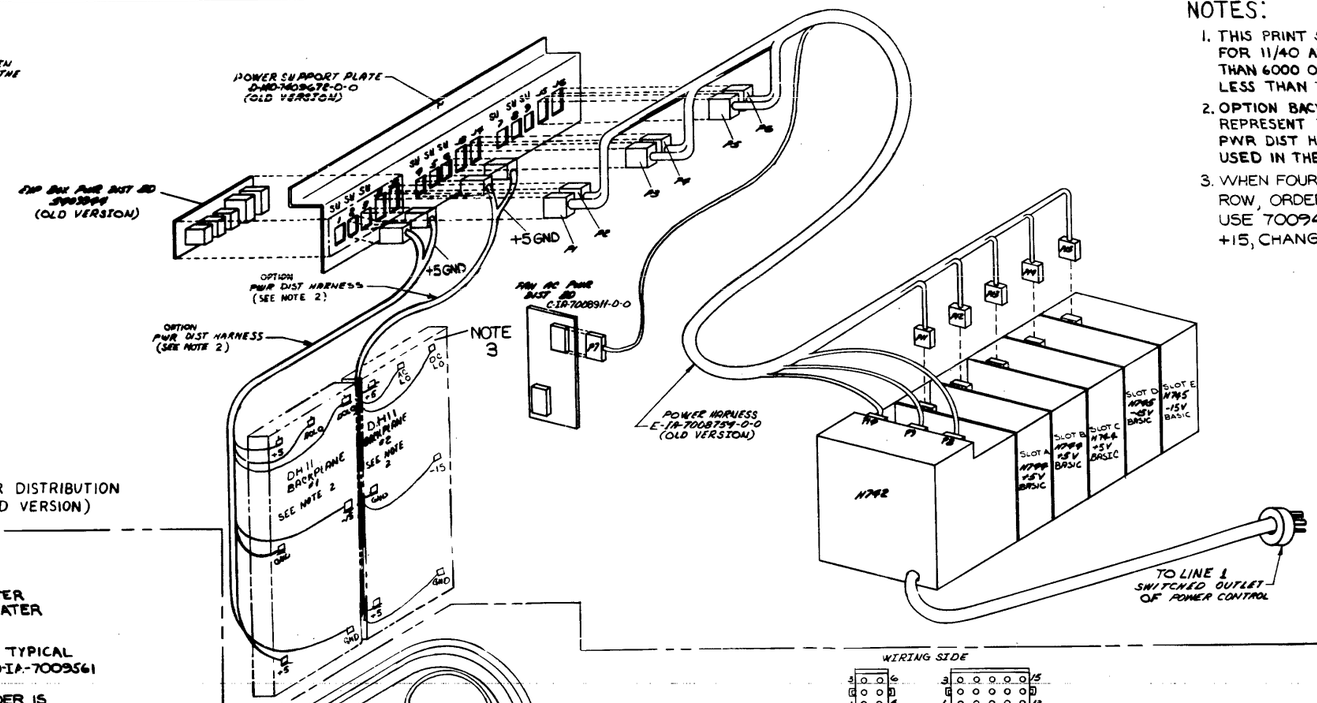

POWER DISTRIBUTION (OLD VERSION)

NOTES:

1. THIS PRINT SHOWS HARNESS ARRANGMENTS FOR 11/40 AND 11/35 WITH SERIAL NO. LESS THAN 6000 OR H960-D,E WITH SERIAL NO. LESS THAN 7000.
2. OPTION BACKPLANES AND HARNESSES REPRESENT TYPICAL INSTALLATION. DH11 USES PWR DIST HARNESS D-IA-7009466 WHEN USED IN THESE BOXES (SEE NOTE 1).
3. WHEN FOUR TERMINALS APPEAR IN TOP ROW, ORDER IS +5, +15, DC LO, AC LO. TO USE 7009466, ADD GRY WIRE FOR +15, CHANGE LENGTHS OF DC LO, AC LO.

NOTES:

1. THIS PRINT SHOWS HARNESS ARRANGMENTS FOR 11/40 AND 11/35 WITH SERIAL NO. GREATER THAN 6000 OR H960-D,E WITH SERIAL NO. GREATER THAN 7000.
2. OPTION BACKPLANES AND HARNESSES REPRESENT TYPICAL INSTALLATION. DH11 USES PWR DIST HARNESS D-IA-7009561 WHEN USED IN THESE BOXES (SEE NOTE 1).
3. WHEN FOUR TERMINALS APPEAR IN TOP ROW, ORDER IS +5, +15, DC LO, AC LO. USE 7009561 REV B (WITH +15 GRY WIRE).

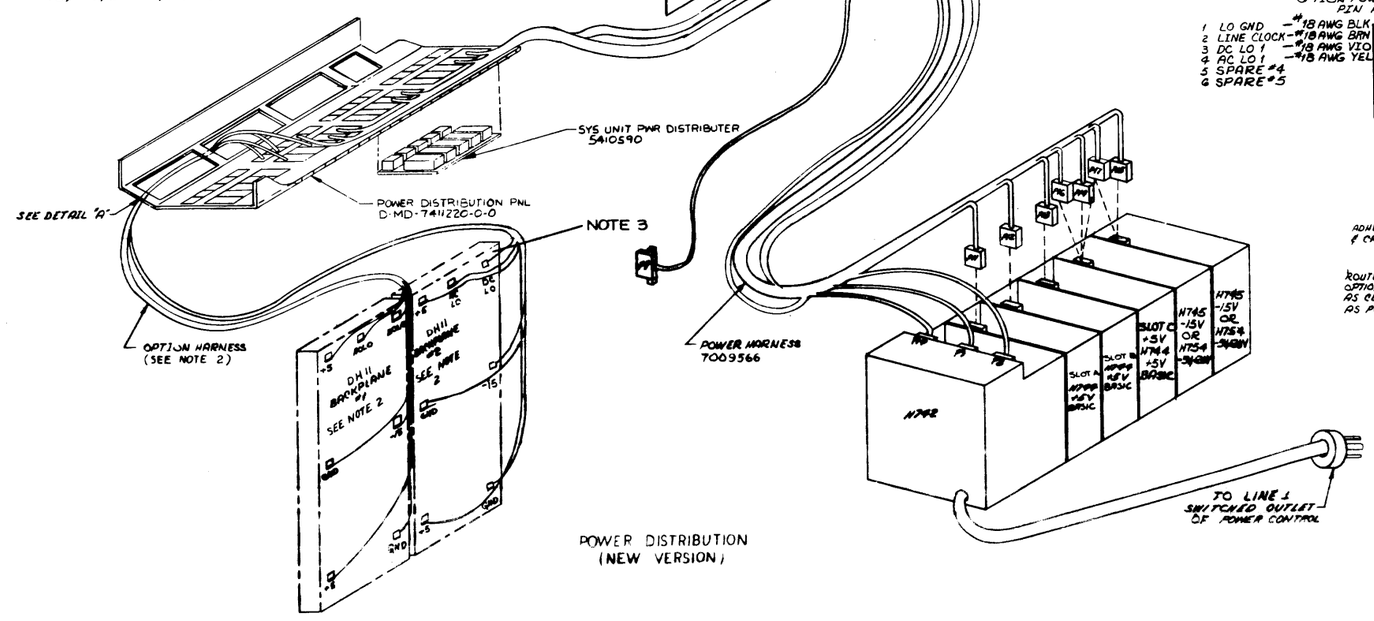

POWER DISTRIBUTION (NEW VERSION)

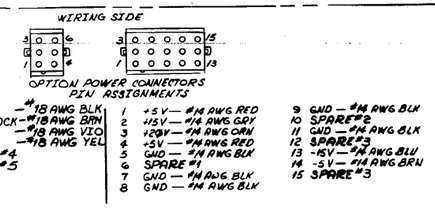

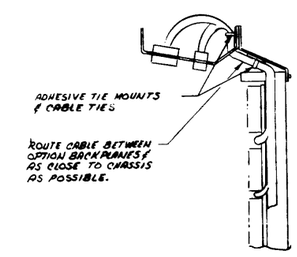

FIRST USED ON OPTION/MODEL	QTY.	DESCRIPTION	PART NO.	ITEM NO.
PDP11		PARTS LIST		

UNLESS OTHERWISE SPECIFIED DIMENSION IN INCHES
TOLERANCES
DECIMALS: .XXX = .005, .XX = .02, .X = .1
ANGLES: ±0° 30'
REMOVE BURRS AND BREAK SHARP CORNERS SURFACE QUALITY ▽

MATERIAL —//—
FINISH —//—

DRN. R. PUDELKO DATE 2-12-73
CHK'D. K. GLEEZEN DATE 2-22-73
ENG. J. MC NAMARA DATE 2-22-73
PROJ. ENG. J. MC NAMARA DATE 2-22-73
PROD. T. BORENSTEIN DATE 2-23-73

NEXT HIGHER ASSY. B-DD-DH11-Ø
SCALE —//—
SHEET 2 OF 14

digital EQUIPMENT CORPORATION MAYNARD MASSACHUSETTS

TITLE BASIC ASSY DH11 IN H96Ø

SIZE D CODE UA NUMBER DH11-Ø-Ø REV. F
DIST.

REVISIONS: REV | CHANGE NO | CHK

DEC FORM 1-0 DWG 107 C

THE DRAWING AND SPECIFICATIONS HEREIN ARE THE PROPERTY OF DIGITAL EQUIPMENT CORPORATION AND SHALL NOT BE REPRODUCED OR COPIED OR USED IN WHOLE OR IN PART AS THE BASIS FOR THE MANUFACTURE OR SALE OF ANY WITHOUT WRITTEN PERMISSION
COPYRIGHT ©1974 DIGITAL EQUIPMENT CORPORATION

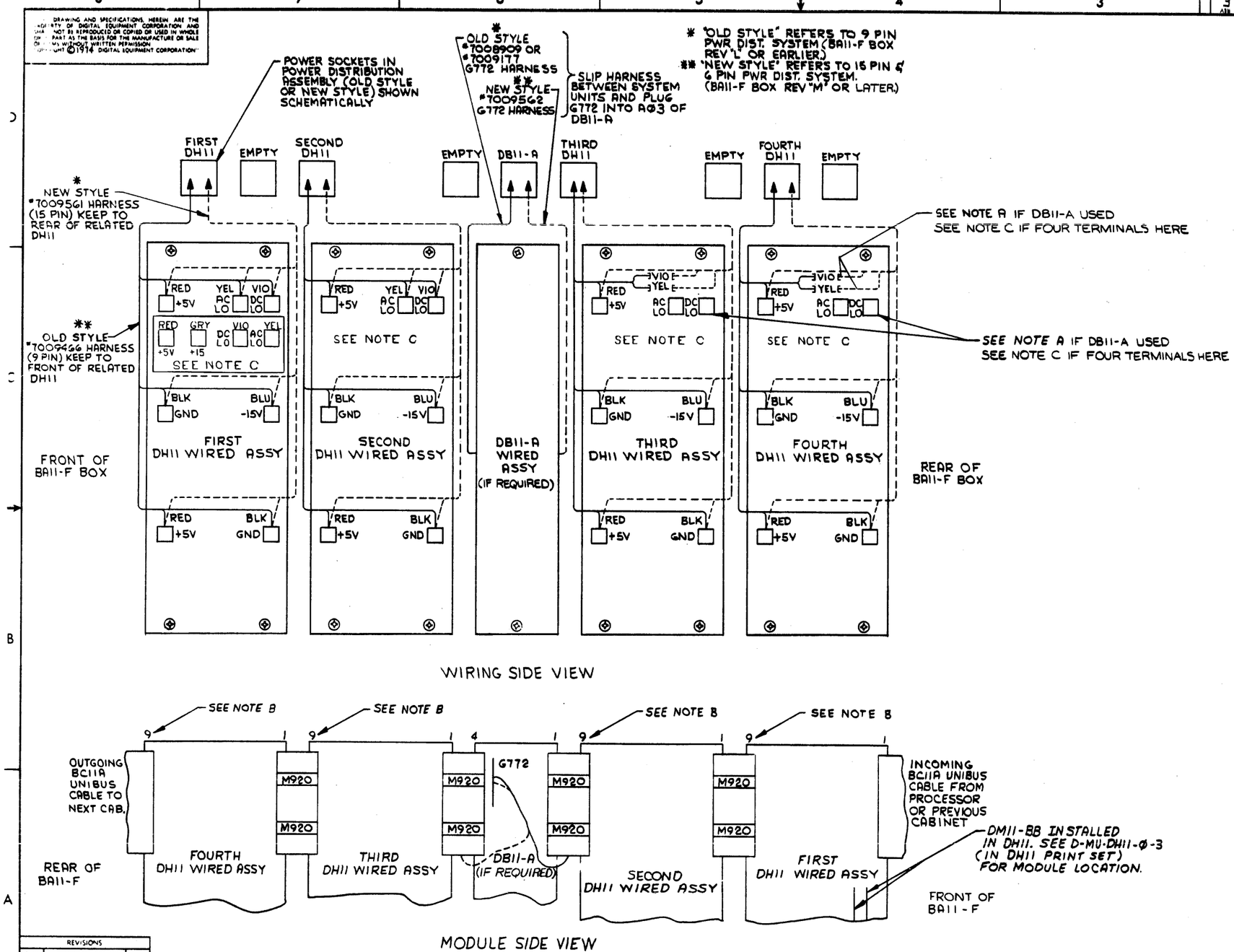

NOTES:

A. FOR DH11'S BEYOND BUS BUFFER IN CAB DO NOT CONNECT AC LO (YEL) OR DC LO (VIO) WIRE. SLEEVE EACH WIRE WITH SHRINK SLEEVING

B. INSTALL UNIBUS TERMINATOR M930 (SUPPLIED WITH PROCESSOR) IN SLOT A809 OF LAST DH11 IF THE UNIBUS ENDS IN THIS CABINET

C. ETCH BACKPLANE 5410333 REV A AND LATER - 4VE FOUR TERMINALS IN TOP ROW:

+5V -5 2B 2B 2B

NOTE THE NEW ARRANGEMENT OF AC LO, DC LO

REVISIONS		
CHK	CHANGE NO	REV

TITLE	SIZE	CODE	NUMBER	REV.
BASIC ASSEMBLY DH11 IN H960	D	UA	DH11-0-0	F

SCALE — SHEET 3 OF 14 — DIST.

DRAWINGS AND SPECIFICATIONS HEREIN ARE THE PROPERTY OF DIGITAL EQUIPMENT CORPORATION AND SHALL NOT BE REPRODUCED OR COPIED OR USED IN WHOLE OR IN PART AS THE BASIS FOR THE MANUFACTURE OR SALE OF ITEMS WITHOUT WRITTEN PERMISSION. © DIGITAL EQUIPMENT CORPORATION

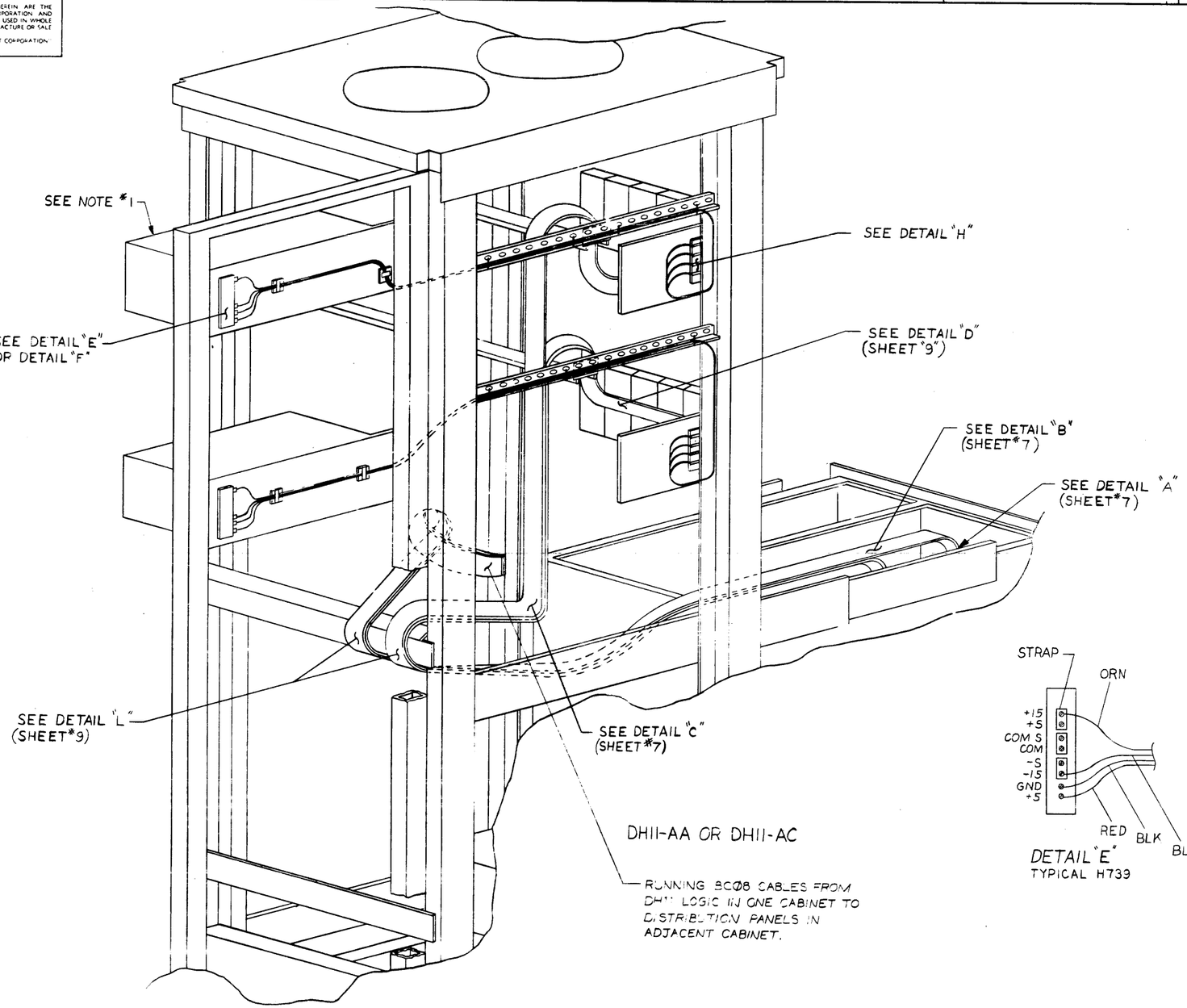

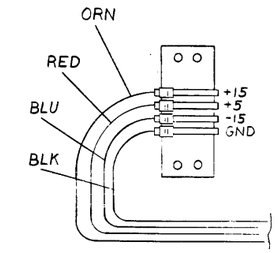

DETAIL "H"
TYP. DIST. PANEL

NOTES:

1. EARLY MODELS OF H758 POWER SUPPLY MUST BE MOUNTED ON REAR OF RACK, NOT ON DOOR, AS THEY WILL NOT CLEAR ON DOOR AS IT CLOSES.

DETAIL "E"
TYPICAL H739

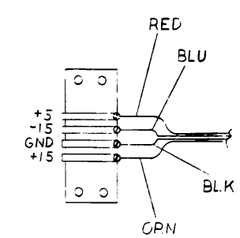

DETAIL "F"
TYPICAL H758

REVISIONS		
CHK	CHANGE NO	REV

CONNECTION OF POWER SUPPLIES
DETAILS: E, F, H
APPLICATION: DHII-AA, -AC

TITLE	SIZE	CODE	NUMBER	REV.
BASIC ASSEMBLY DHII IN H960	D	UA	DHII-Ø-Ø	F

SCALE NONE | SHEET 4 OF 14 | DIST.

"THIS DRAWING AND SPECIFICATIONS, HEREIN, ARE THE PROPERTY OF DIGITAL EQUIPMENT CORPORATION AND SHALL NOT BE REPRODUCED OR COPIED OR USED IN WHOLE OR IN PART AS THE BASIS FOR THE MANUFACTURE OR SALE OF ITEMS WITHOUT WRITTEN PERMISSION COPYRIGHT © 1968 DIGITAL EQUIPMENT CORPORATION"

NOTES:

1. EARLY MODELS OF H758 POWER SUPPLY MUST BE MOUNTED ON REAR OF RACK, NOT ON DOOR, AS THEY WILL NOT CLEAR ON DOOR AS IT CLOSES.

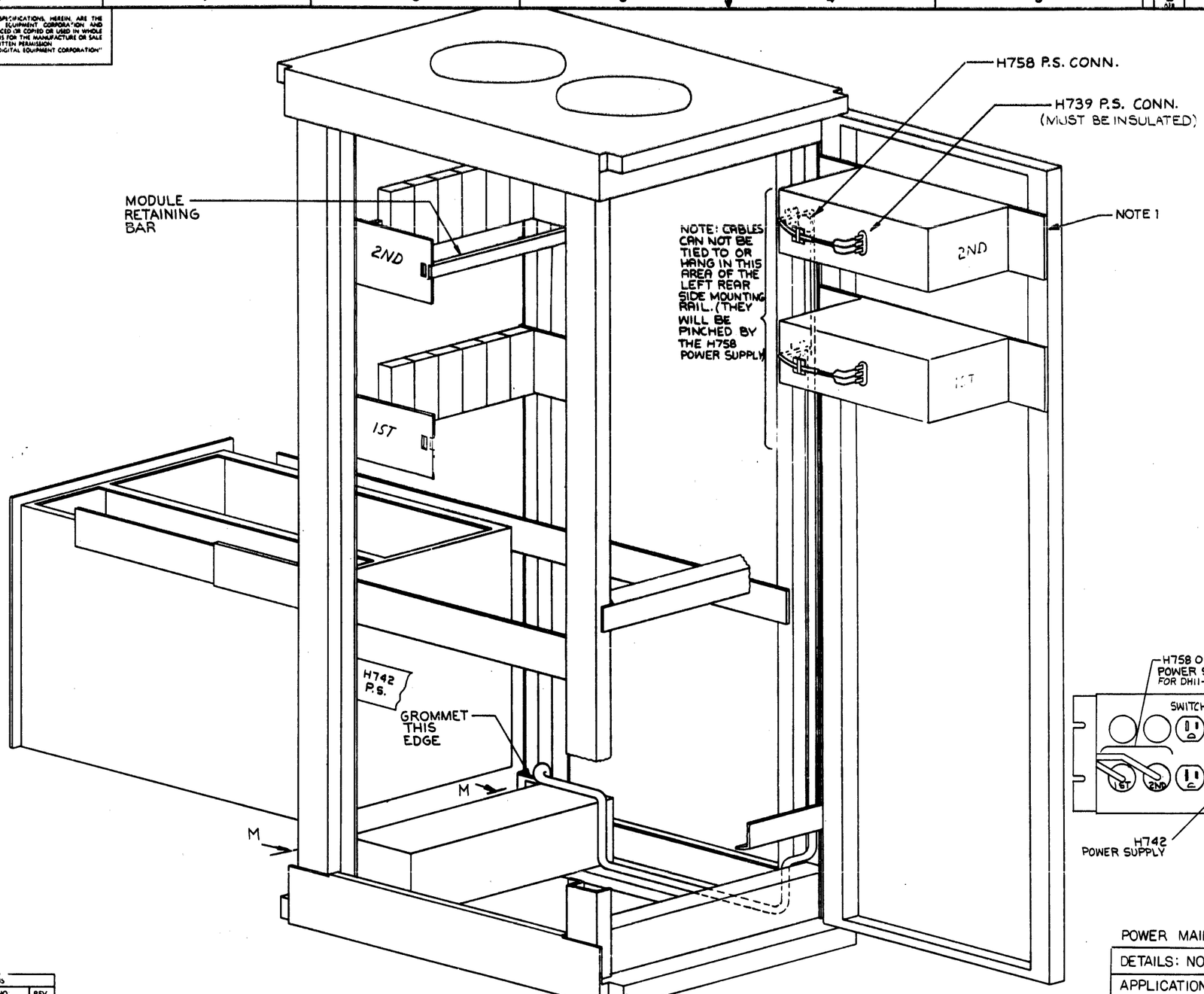

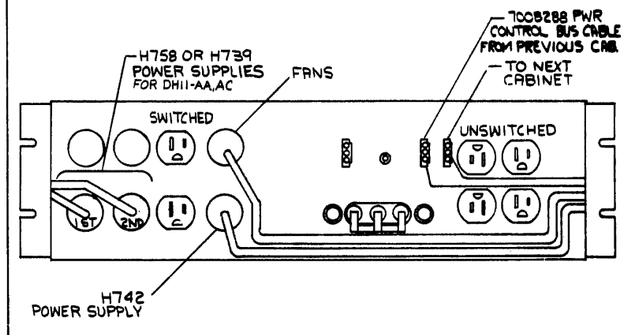

VIEW M-M

POWER MAINS CONNECTIONS

DETAILS: NONE

APPLICATION: DH11-AA,-AC

REVISIONS		
CHK	CHANGE NO.	REV.

TITLE	SIZE	CODE	NUMBER	REV.
BASIC ASSEMBLY DH11 IN H960	D	UA	DH11-Ø-Ø	F
SCALE NONE	SHEET 5 OF 14	DIST.		

DIGITAL EQUIPMENT CORPORATION DH11-Ø-Ø

THIS DRAWING AND SPECIFICATIONS, HEREIN, ARE THE PROPERTY OF DIGITAL EQUIPMENT CORPORATION AND SHALL NOT BE REPRODUCED OR COPIED OR USED IN WHOLE OR IN PART AS THE BASIS FOR THE MANUFACTURE OR SALE OF ITEMS WITHOUT WRITTEN PERMISSION. COPYRIGHT © "DIGITAL EQUIPMENT CORPORATION"

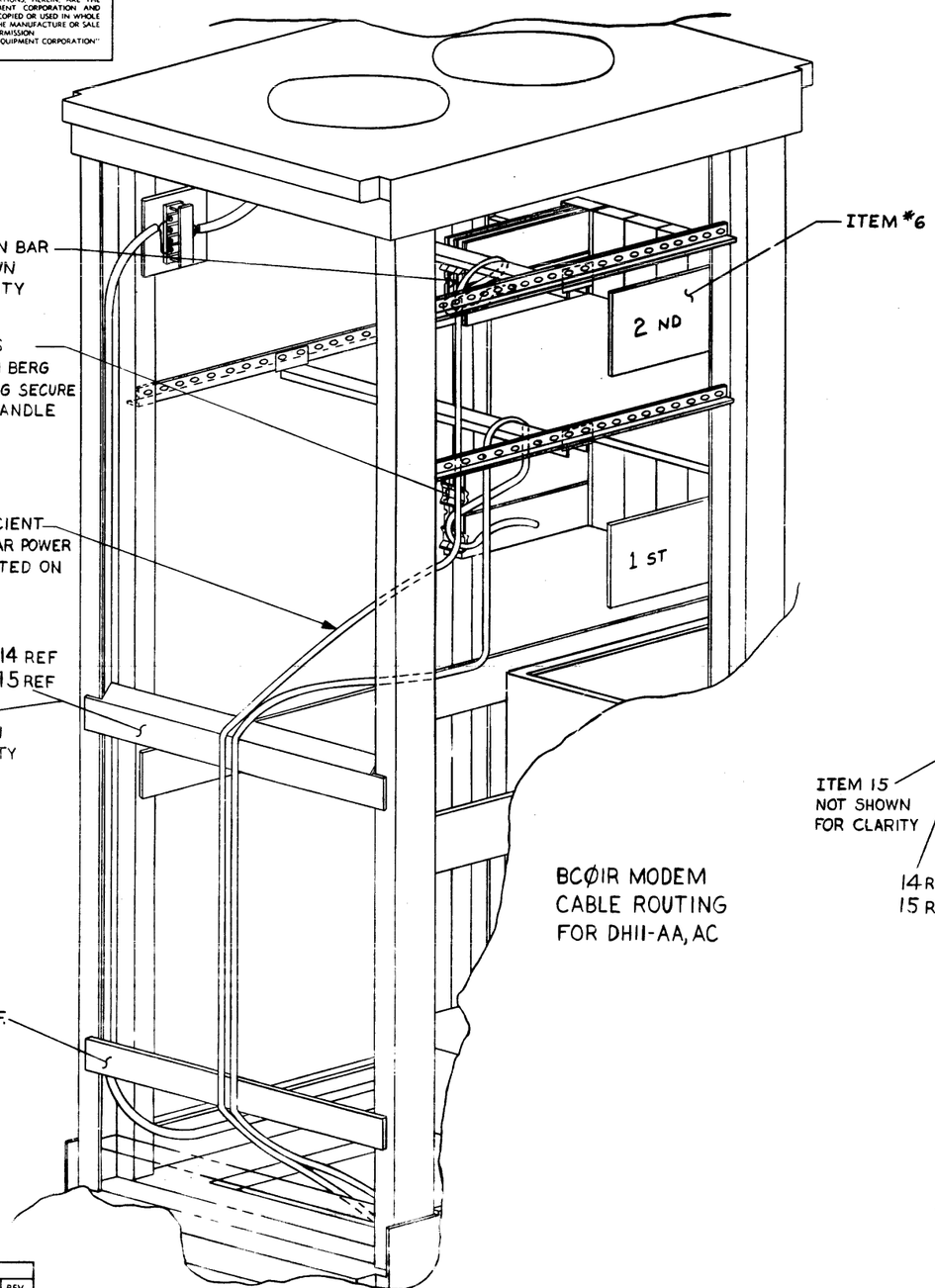

BCØIR MODEM
CABLE ROUTING
FOR DHII-AA, AC

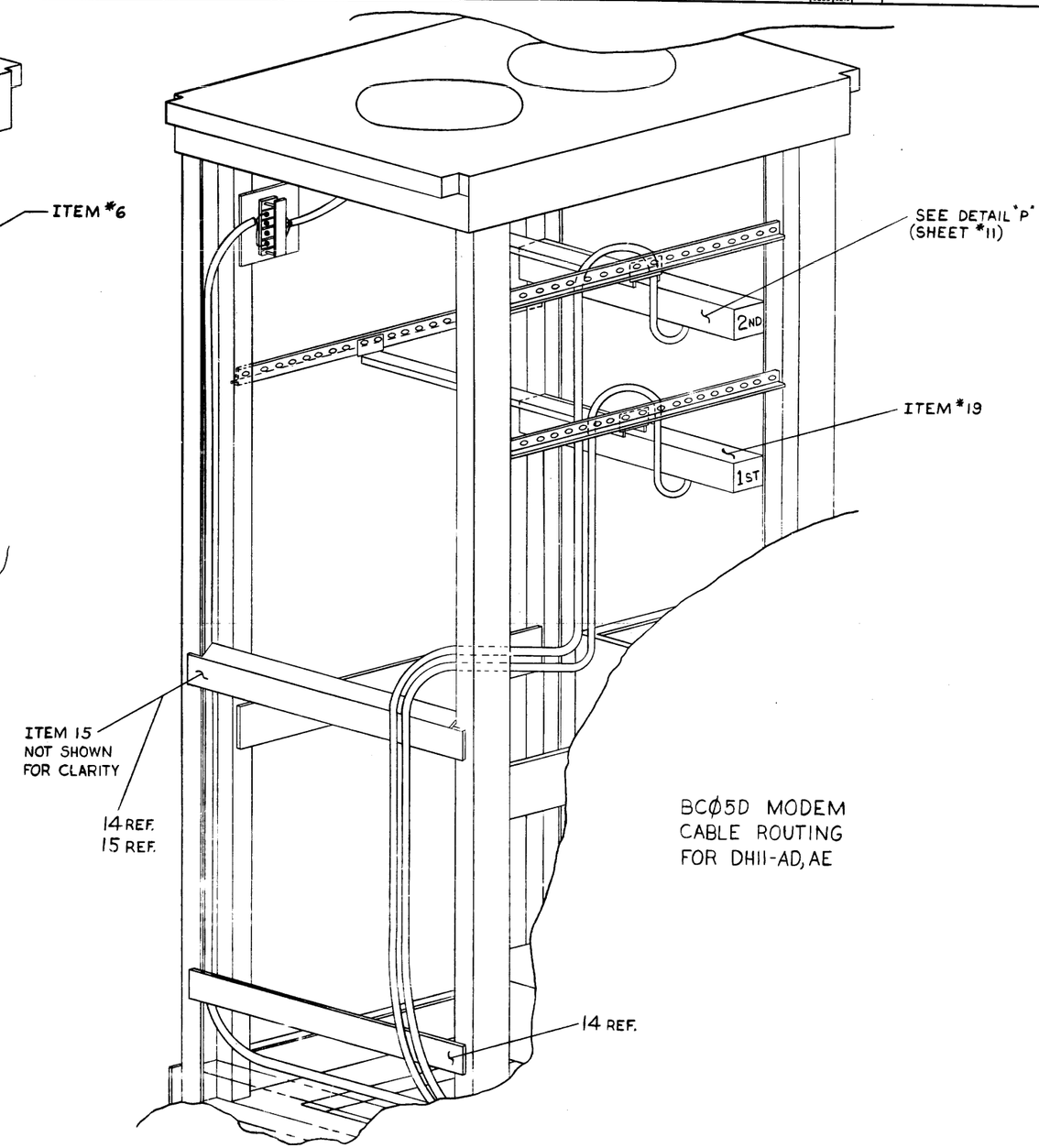

BCØ5D MODEM
CABLE ROUTING
FOR DHII-AD, AE

REVISIONS		
CHK	CHANGE NO	REV

TITLE	SIZE	CODE	NUMBER	REV.
BASIC ASSEMBLY DHII IN H960	D	UA	DHII-Ø-Ø	F
SCALE NONE / SHEET 6 OF 14	DIST.			

"THIS DRAWING AND SPECIFICATIONS, HEREIN, ARE THE PROPERTY OF DIGITAL EQUIPMENT CORPORATION AND SHALL NOT BE REPRODUCED OR COPIED OR USED IN WHOLE OR IN PART AS THE BASIS FOR THE MANUFACTURE OR SALE OF ITEMS WITHOUT WRITTEN PERMISSION
COPYRIGHT © 1973 DIGITAL EQUIPMENT CORPORATION"

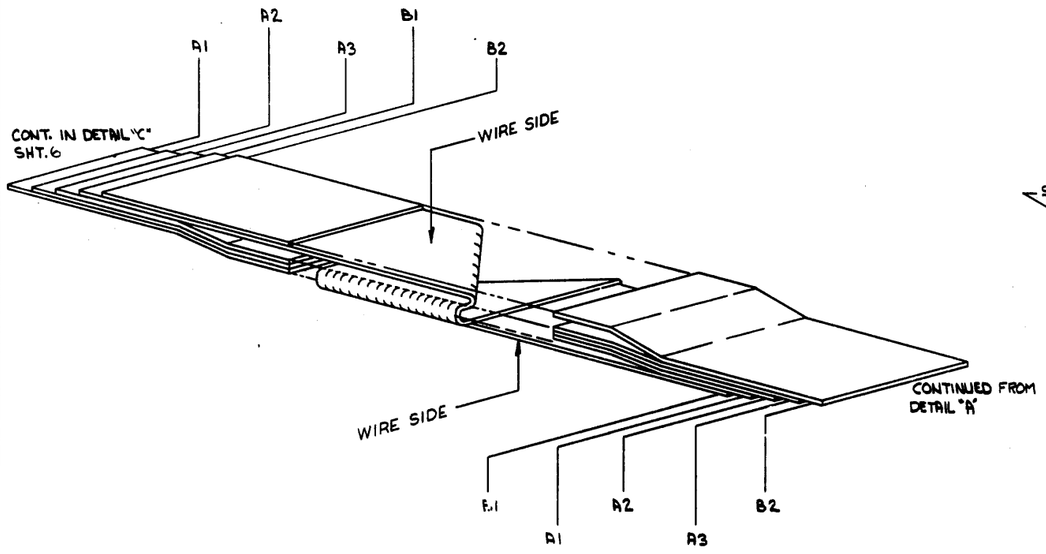

DETAIL 'B'

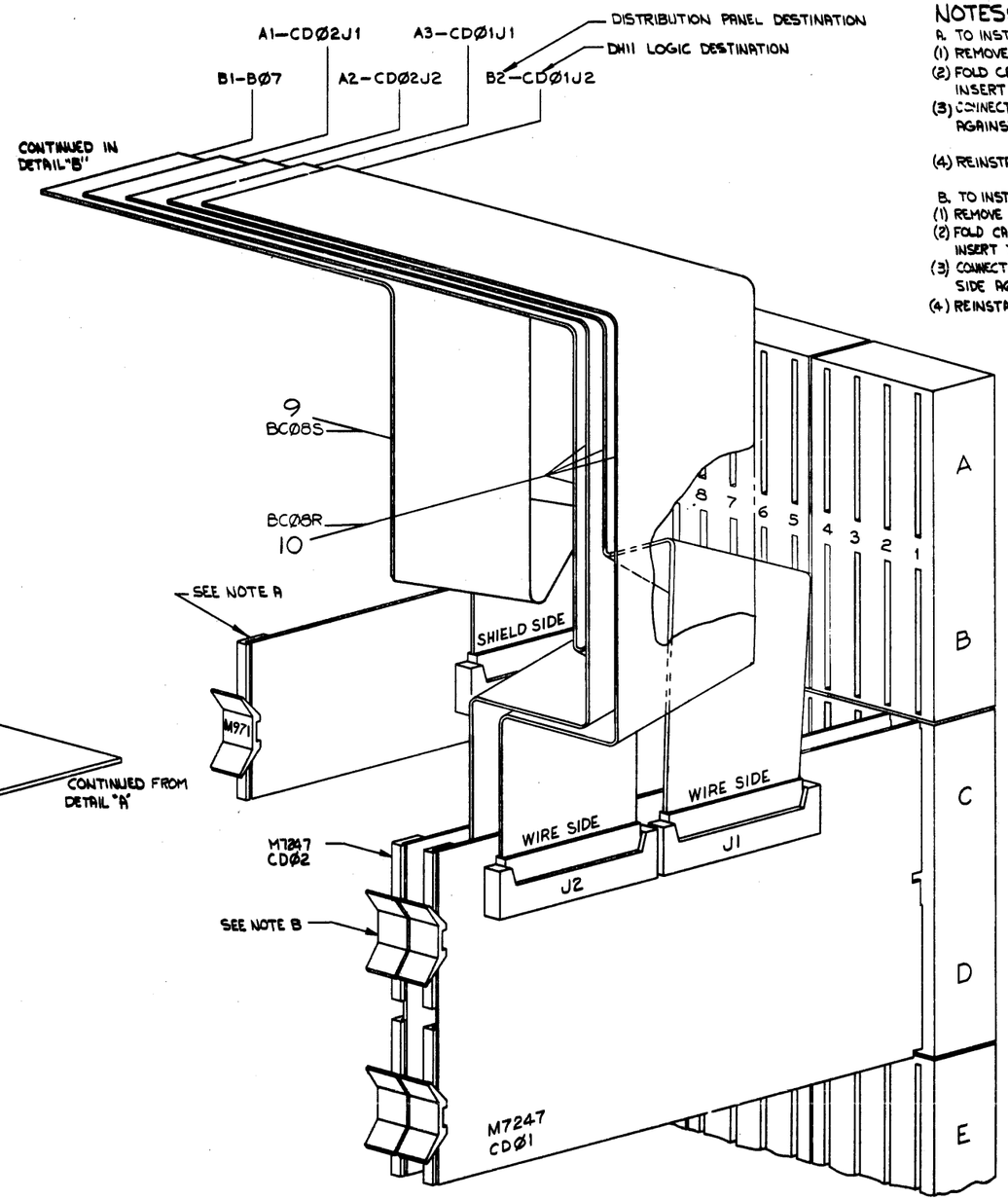

DETAIL 'A'

NOTES:

A. TO INSTALL CABLE TO M971-BØ7:
(1) REMOVE G736Ø-AØ7 AND M7821-AØ6.
(2) FOLD CABLE AS SHOWN IN DETAIL "A" & INSERT DOWN THRU MODULES.
(3) CONNECT CABLE TO MODULE WIRE SIDE AGAINST BOARD.
(4) REINSTALL MODULES REMOVED.

B. TO INSTALL CABLES TO M7247'S CDØ1 & CDØ2:
(1) REMOVE M7821-AØ2 & M796-BØ2.
(2) FOLD CABLES AS SHOWN IN DETAIL "A" & INSERT THRU MODULES.
(3) CONNECT CABLES TO MODULES, SHIELD SIDE AGAINST BOARD.
(4) REINSTALL MODULES REMOVED.

REVISIONS		
CHK	CHANGE Nº	REV.

DETAILS: A, B
APPLICATION: DH11-AA, AC

TITLE	SIZE	CODE	NUMBER	REV.
BASIC ASSEMBLY DH11 IN H96Ø	D	UA	DH11-Ø-Ø	F

SCALE NONE | SHEET 7 OF 14 | DIST.

"THIS DRAWING AND SPECIFICATIONS, HEREIN, ARE THE PROPERTY OF DIGITAL EQUIPMENT CORPORATION AND SHALL NOT BE REPRODUCED OR COPIED OR USED IN WHOLE OR IN PART AS THE BASIS FOR THE MANUFACTURE OR SALE OF ITEMS WITHOUT WRITTEN PERMISSION.
COPYRIGHT © 1974, DIGITAL EQUIPMENT CORPORATION"

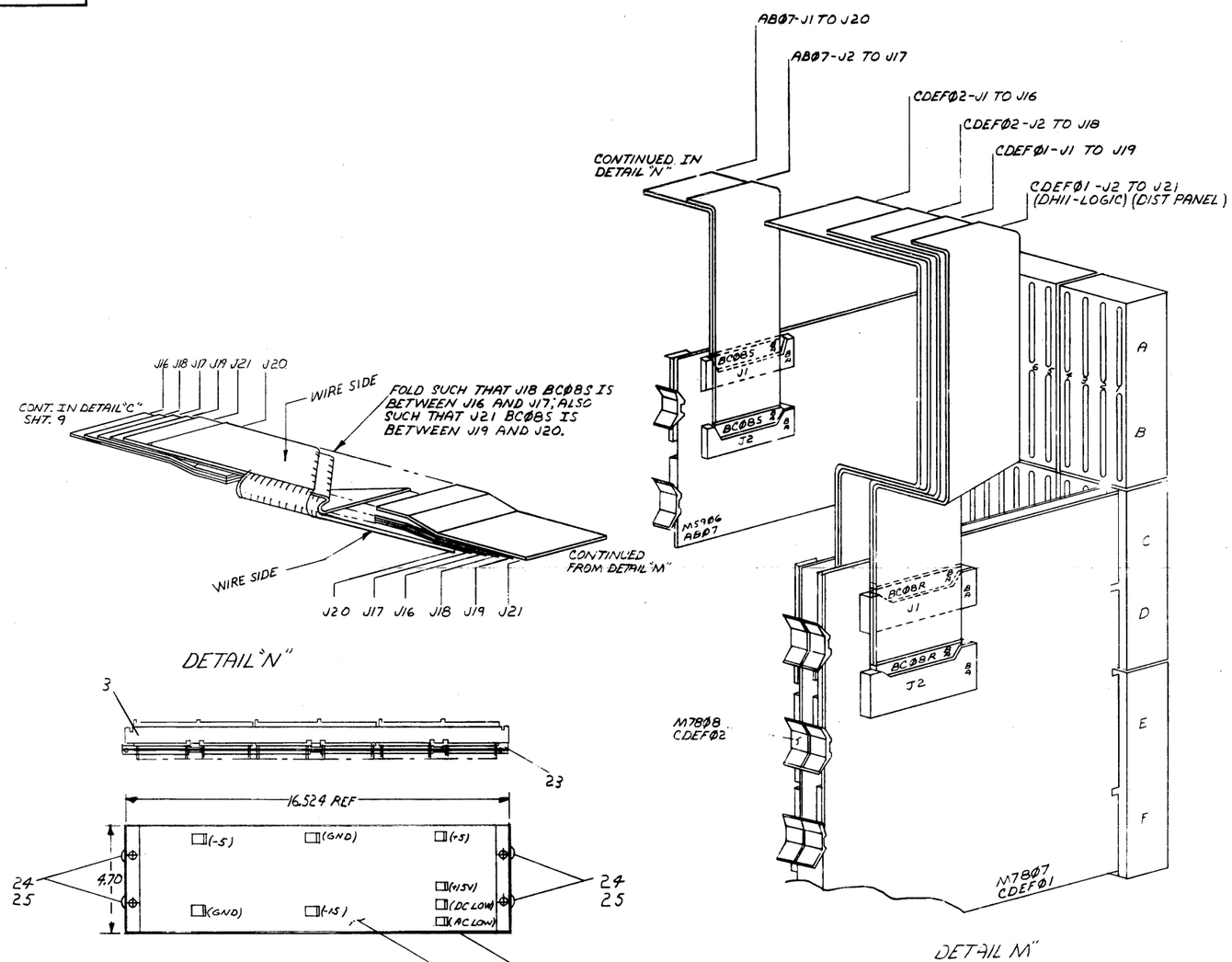

DETAILS; M, N, T

APPLICATION; DH11-AD-AE

FIRST USED ON OPTION/MODEL	QTY.	DESCRIPTION	PART NO.	ITEM NO.
PDP11		PARTS LIST		

DIMENSIONAL TOLERANCE

DIMENSIONS ARE MILLIMETERS / INCHES UNLESS OTHERWISE SPECIFIED

MILLIMETERS	INCHES	ANGLES
X.XX = ±0.10	.XXX = ±.005	±0° 30'
X.X = ±0.5	.XX = ±.02	
X = ±2	.X = ±.1	

THIRD ANGLE PROJECTION

REMOVE BURRS AND BREAK SHARP CORNERS SURFACE QUALITY ✓

MATERIAL —"—

FINISH —"—

		DATE
DRN.	R VOWLES	2-22-73
CHK'D.	K GLEEZEN	2-22-73
ENG.	J MCNAMARA	2-22-73
PROJ. ENG.	J MCNAMARA	2-22-73
PROD.	J BORENSTEIN	2-23-73

digital

TITLE: BASIC ASSY DH11 IN H960

NEXT HIGHER ASSY. B-DD-DH11-0

SCALE NONE

SHEET 9 OF 14

SIZE	CODE	NUMBER	REV.
D	UA	DH11-0-0	F

DIST.

REVISIONS: REV. | CHANGE NO. | CHK

DEC FORM NO. 880 1005

THE DRAWING AND SPECIFICATIONS HEREIN ARE THE PROPERTY OF DIGITAL EQUIPMENT CORPORATION AND SHALL NOT BE REPRODUCED OR COPIED OR USED IN WHOLE OR IN PART AS THE BASIS FOR THE MANUFACTURE OR SALE OF ITEMS WITHOUT WRITTEN PERMISSION
COPYRIGHT © 1973 DIGITAL EQUIPMENT CORPORATION"

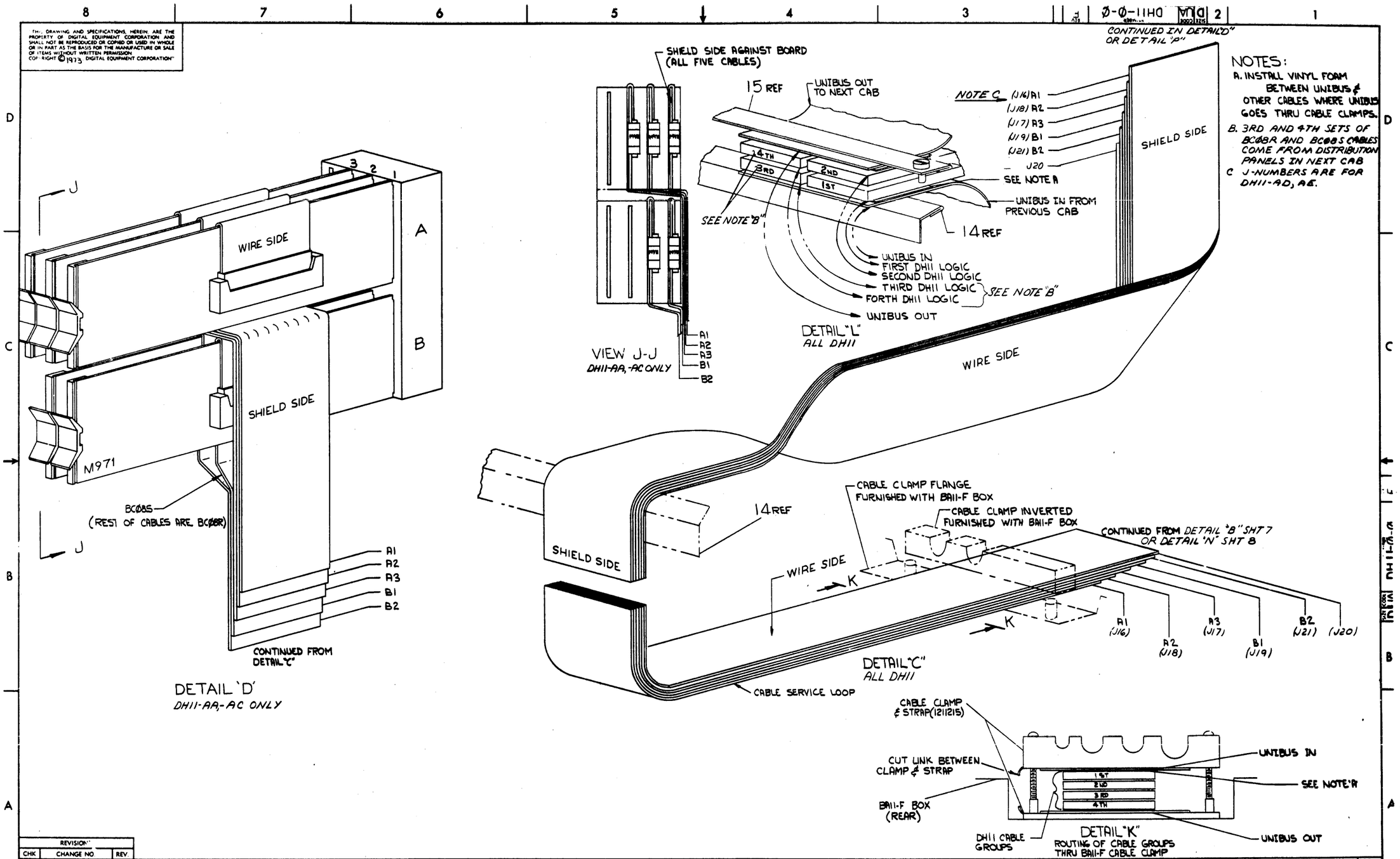

"THIS DRAWING AND SPECIFICATIONS, HEREIN, ARE THE PROPERTY OF DIGITAL EQUIPMENT CORPORATION AND SHALL NOT BE REPRODUCED OR COPIED OR USED IN WHOLE OR IN PART AS THE BASIS FOR THE MANUFACTURE OR SALE OF ITEMS WITHOUT WRITTEN PERMISSION.
COPYRIGHT © DIGITAL EQUIPMENT CORPORATION"

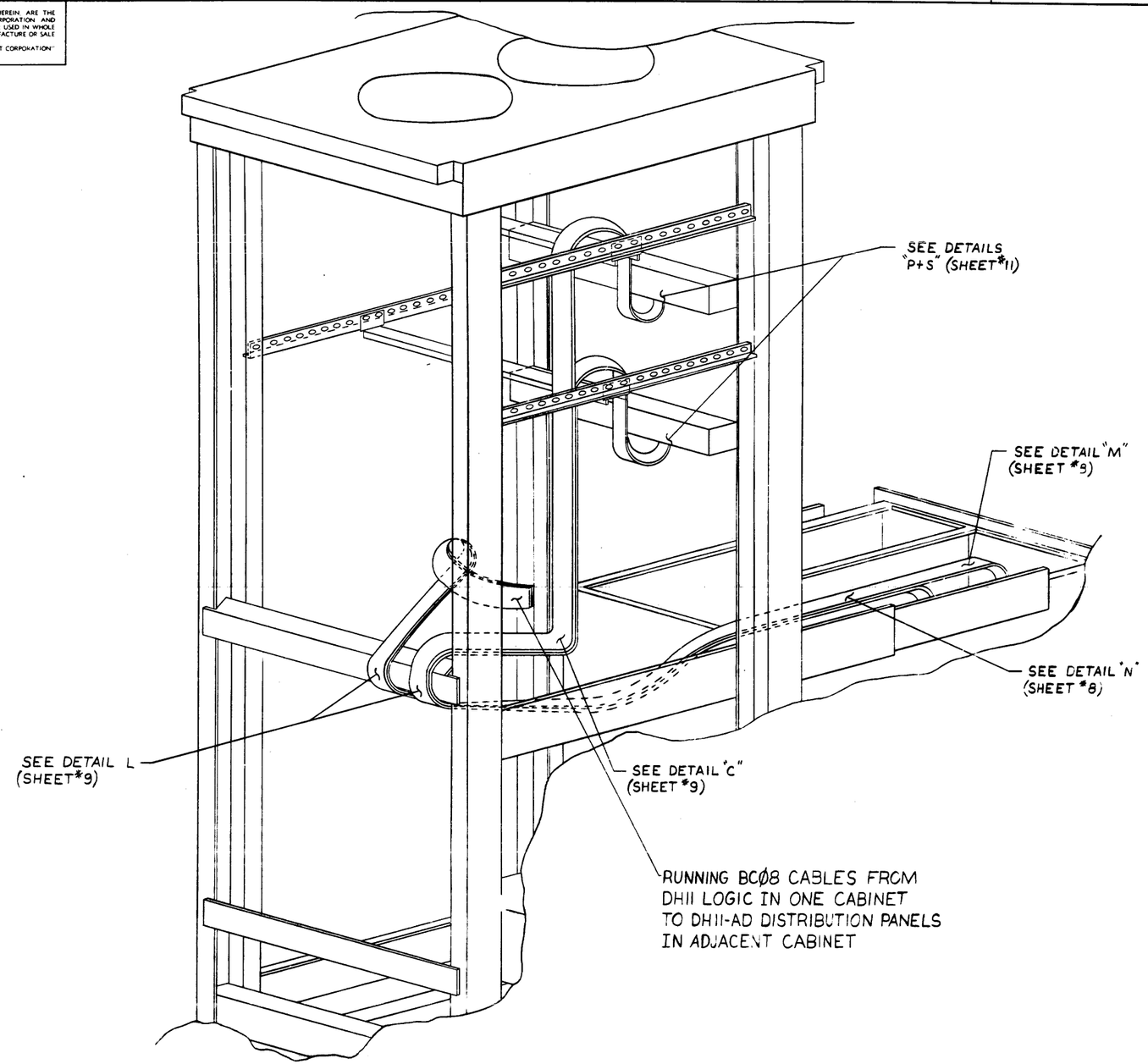

REVISIONS		
CHK	CHANGE NO.	REV

TITLE	SIZE	CODE	NUMBER	REV.
BASIC ASSEMBLY DH11 IN H960	D	UA	DH11-Ø-Ø	F
SCALE NONE	SHEET 10 OF 14		DIST.	

"THIS DRAWING AND SPECIFICATIONS, HEREIN, ARE THE PROPERTY OF DIGITAL EQUIPMENT CORPORATION AND SHALL NOT BE REPRODUCED OR COPIED OR USED IN WHOLE OR IN PART AS THE BASIS FOR THE MANUFACTURE OR SALE OF ITEMS WITHOUT WRITTEN PERMISSION.
COPYRIGHT © , DIGITAL EQUIPMENT CORPORATION"

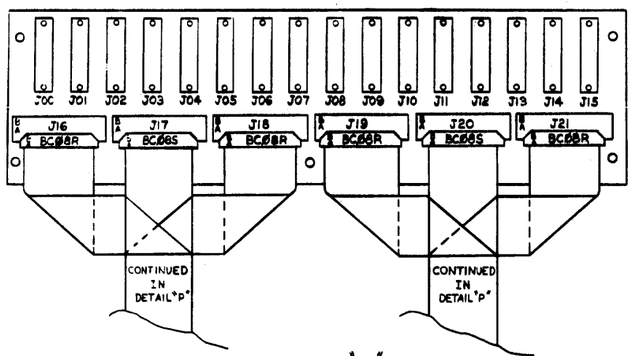

DETAIL "S"

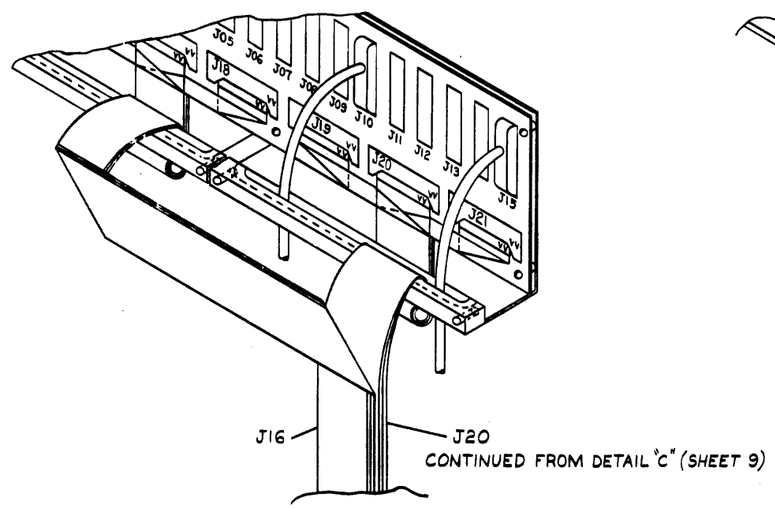

DETAIL "P"

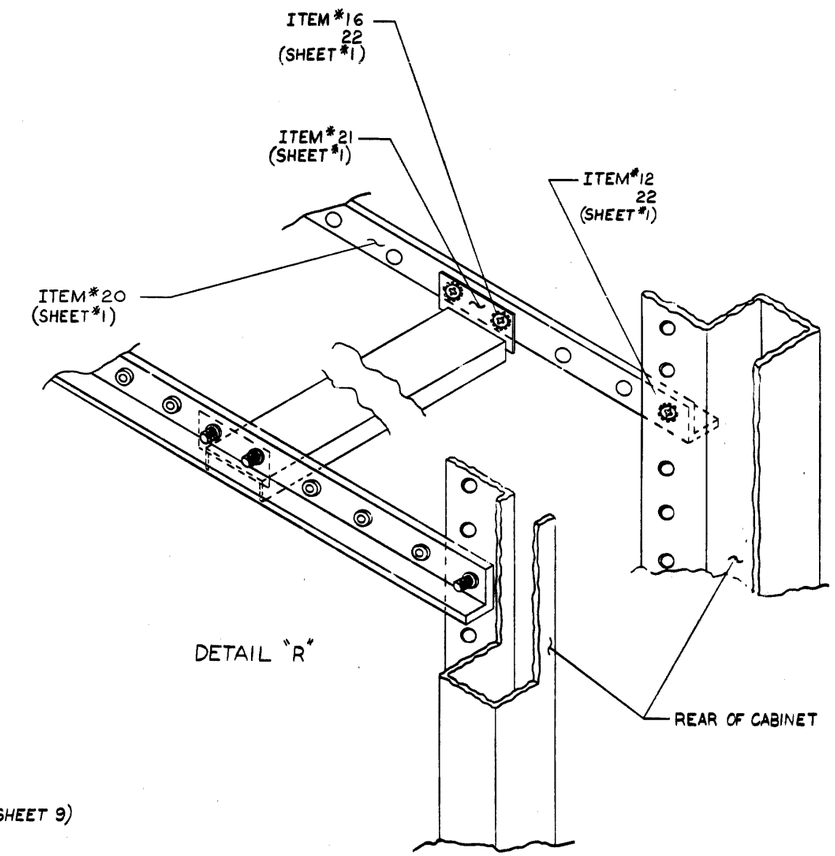

DETAIL "R"

FIRST USED ON OPTION/MODEL	QTY.	DESCRIPTION	PART NO.	ITEM NO.
PDP11		PARTS LIST		

DIMENSIONAL TOLERANCE
DIMENSIONS ARE MILLIMETERS / INCHES UNLESS OTHERWISE SPECIFIED

MILLIMETERS	INCHES	ANGLES
XXX = ±0.10	XXX = ±.005	±0° 30'
XX = ±0.5	XX = ±.02	
X = ±2	X = ±.1	

THIRD ANGLE PROJECTION

REMOVE BURRS AND BREAK SHARP CORNERS SURFACE QUALITY ✓

MATERIAL —//—

FINISH —//—

		DATE
DRN.	R. VOWLES	2-22-73
CHK'D.	K. GLEEZEN	2-22-73
ENG.	J. MCNAMARA	2-22-73
PROJ. ENG.	J. MCNAMARA	2-22-73
PROD.	J. BORENSTEIN	2-23-73

NEXT HIGHER ASSY. B-DD-DH11-Ø

SCALE NONE

SHEET 11 OF 14

digital

TITLE BASIC ASSEMBLY DH11 IN H96Ø

SIZE	CODE	NUMBER	REV.
D	UA	DH11-Ø-Ø	F

DIST.

REVISIONS: REV. / CHANGE NO. / CHK

DEC FORM NO. DRD 100-B

THIS DRAWING AND SPECIFICATIONS, HEREIN, ARE THE PROPERTY OF DIGITAL EQUIPMENT CORPORATION AND SHALL NOT BE REPRODUCED OR COPIED OR USED IN WHOLE OR IN PART AS THE BASIS FOR THE MANUFACTURE OR SALE OF ITEMS WITHOUT WRITTEN PERMISSION.
COPYRIGHT © "DIGITAL EQUIPMENT CORPORATION"

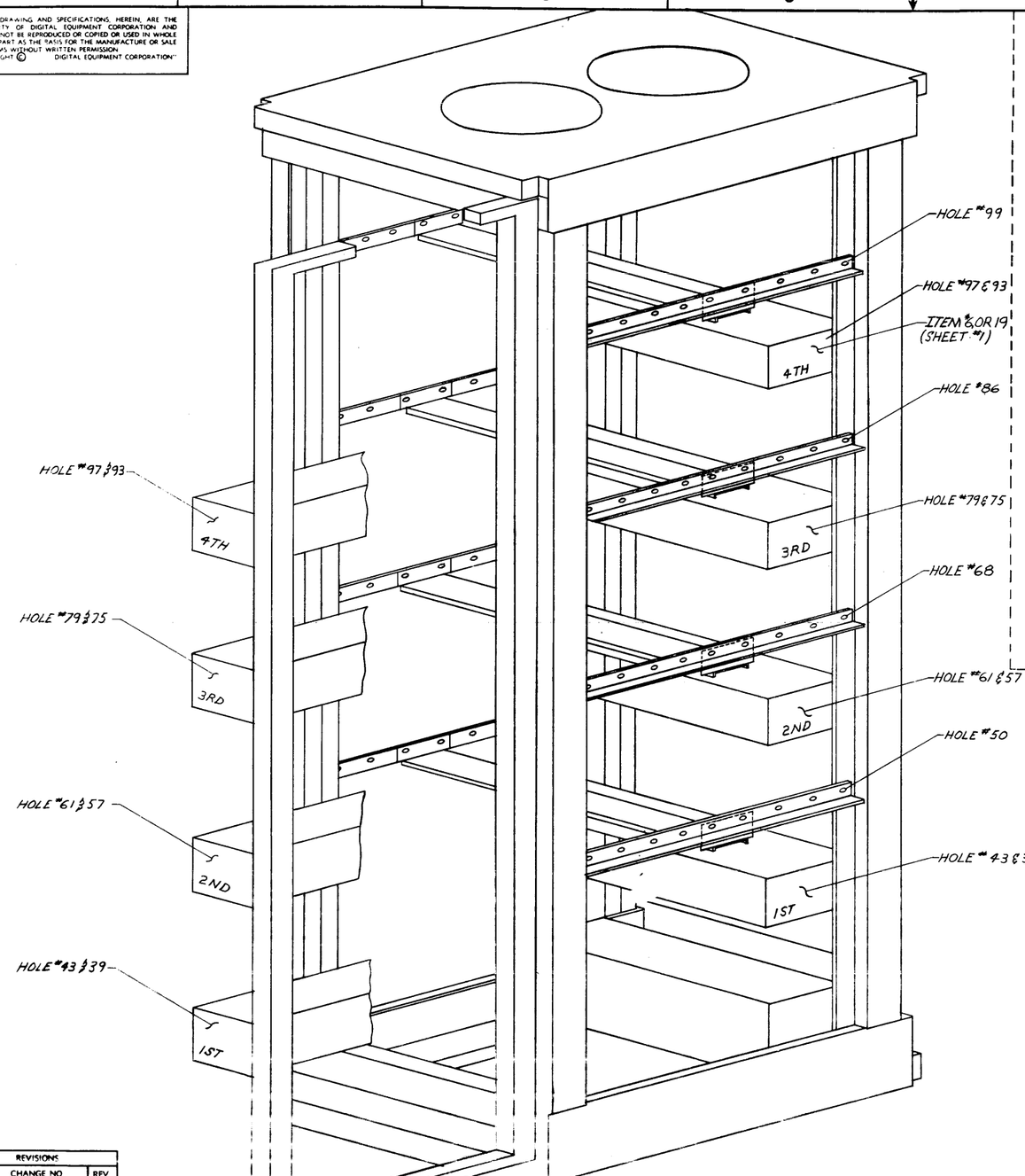

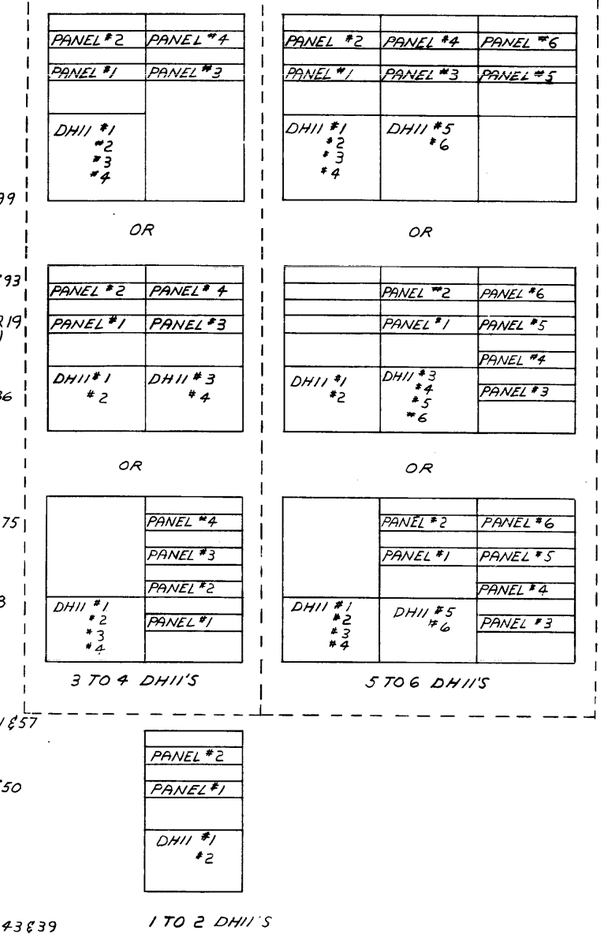

TYPICAL DH11 CONFIGURATIONS

REVISIONS		
CHK	CHANGE NO	REV

TITLE BASIC ASSEMBLY DH11 IN H960	SIZE D	CODE UA	NUMBER DH11-0-0	REV. F
SCALE NONE	SHEET 12 OF 14	DIST.		

THIS DRAWING AND SPECIFICATIONS, HEREIN, ARE THE PROPERTY OF DIGITAL EQUIPMENT CORPORATION AND SHALL NOT BE REPRODUCED OR COPIED OR USED IN WHOLE OR IN PART AS THE BASIS FOR THE MANUFACTURE OR SALE OF ITEMS WITHOUT WRITTEN PERMISSION. COPYRIGHT © 1974, DIGITAL EQUIPMENT CORPORATION"

	1	2	3	4	5	6	7	8	9	10	11	12	13	14	15	16	17	18	19	20	21	22	23	24
	M971	M971	M971	M594	M594																	M596	M596	
A	*CABLE DATA SET CNTRL LINES ØØ THRU Ø3	*CABLE DATA SET CNTRL LINES Ø4 THRU Ø7	*CABLE DATA SET CNTRL LINES Ø8 THRU 11	** LINE 8 THRU 11 "X" SLOT	** LINE 12 THRU 15 "X" SLOT	LINE Ø "A" SLOT	LINE 1 "A" SLOT	LINE 2 "A" SLOT	LINE 3 "A" SLOT	LINE 4 "A" SLOT	LINE 5 "A" SLOT	LINE 6 "A" SLOT	LINE 7 "A" SLOT	LINE 8 "A" SLOT	LINE 9 "A" SLOT	LINE 10 "A" SLOT	LINE 11 "A" SLOT	LINE 12 "A" SLOT	LINE 13 "A" SLOT	LINE 14 "A" SLOT	LINE 15 "A" SLOT	*** LINE 8 THRU 11 "Y" SLOT	*** LINE 12 THRU 15 "Y" SLOT	
	M971	M971	M974	M594	M594																	M596	M596	
B	• • CABLE DATA LINES ØØ THRU 15	*CABLE DATA SET CNTRL LINES 12 THRU 15	▲▲ LOOP BACK TEST LINES Ø THRU 15	** LINE Ø THRU 3 "X" SLOT	** LINE 4 THRU 7 "X" SLOT	LINE Ø "B" SLOT	LINE 1 "B" SLOT	LINE 2 "B" SLOT	LINE 3 "B" SLOT	LINE 4 "B" SLOT	LINE 5 "B" SLOT	LINE 6 "B" SLOT	LINE 7 "B" SLOT	LINE 8 "B" SLOT	LINE 9 "B" SLOT	LINE 10 "B" SLOT	LINE 11 "B" SLOT	LINE 12 "B" SLOT	LINE 13 "B" SLOT	LINE 14 "B" SLOT	LINE 15 "B" SLOT	*** LINE Ø THRU 3 "Y" SLOT	*** LINE 4 THRU 7 "Y" SLOT	

WIRING SIDE VIEW OF DISTRIBUTION PANEL (MODULE UTILIZATION)

- • USED WHEN DM11-BB IS IMPLEMENTED
- •• DATA CABLE FROM DH11-A LOGIC
- ▲▲ LOOP BACK TEST CARD FOR DIAGNOSTICS REMOVE FOR NORMAL OPERATION
- ** EIA LEVEL CONVERSION FOR DATA LEADS ONLY (SEE CHART)
- *** ACTIVE 20mA LEVEL CONVERSION (SEE CHART)

	USAGE OF LINE		'11 OPTION	"A" SLOT	"B" SLOT	"X" SLOT	"Y" SLOT
Ø	LOOP BACK TEST	—	—	EMPTY	DONT CARE	EMPTY	EMPTY
1	20mA ACTIVE LOCAL	—	DM11-DA	EMPTY	M973	EMPTY	M5960 or M596
2	EIA LOCAL (DATA ONLY)	—	DM11-DB	W404	BCØ1R	M594	EMPTY
3	EIA FULL CONTROL	—	DF11-A, DM11-DC	M594	BCØ1R	EMPTY	EMPTY
4	IN' GRAL MODEM (ANS ONLY)	—	DF11-BB	M587	M587	EMPTY	EMPTY
5	FLOATING 20mA LOCAL	—	DF11-K	M598	M973	EMPTY	EMPTY
6	GENERAL (ASYNC) DF11 SLOT	—	NONE	DF11 LEVEL CONVERTER	DF11 CABLE	EMPTY	EMPTY

NOTES:

M974 IN BØ3. ALL LINES (Ø THRU 15) AFFECTED.

ALL 4 SLOTS IN EACH GROUP (Ø-3, 4-7, 8-11, 12-15) MUST BE IN THIS MODE, IF ANY ARE.

ALL 4 SLOTS IN EACH GROUP (Ø-3, 4-7, 8-11, 12-15) MUST BE IN THIS MODE, IF ANY ARE.

DM11-DC = 4-M594, 4-BCØ1R. DF11-A = 1-M594, 1-BCØ1R

M587 IS DOUBLE HEIGHT CARD.

REVISIONS		
CHK	CHANGE NO.	REV.

TITLE	SIZE	CODE	NUMBER	REV.
BASIC ASSEMBLY DH11 IN H960	D	UA	DH11-Ø-Ø	F
SCALE	SHEET 13 OF 14	DIST.		

DEC FORM NO ORD 137

"THIS DRAWING AND SPECIFICATIONS, HEREIN, ARE THE PROPERTY OF DIGITAL EQUIPMENT CORPORATION AND SHALL NOT BE REPRODUCED OR COPIED OR USED IN WHOLE OR IN PART AS THE BASIS FOR THE MANUFACTURE OR SALE OF ITEMS WITHOUT WRITTEN PERMISSION. COPYRIGHT © 1974, DIGITAL EQUIPMENT CORPORATION"

OCTAL TO JUMPER CONVERSIONS

M7821

	VECTORS				IN=1	OUT=Ø
	8	7	6	5	4	3	2*
3ØØ	OUT	IN	IN	OUT	OUT	OUT	OUT
3Ø4	OUT	IN	IN	OUT	OUT	OUT	IN
31Ø	OUT	IN	IN	OUT	OUT	IN	OUT
314	OUT	IN	IN	OUT	OUT	IN	IN
32Ø	OUT	IN	IN	OUT	IN	OUT	OUT
324	OUT	IN	IN	OUT	IN	OUT	IN
33Ø	OUT	IN	IN	OUT	IN	IN	OUT
334	OUT	IN	IN	OUT	IN	IN	IN
34Ø	OUT	IN	IN	IN	OUT	OUT	*
35Ø	OUT	IN	IN	IN	OUT	IN	*
36Ø	OUT	IN	IN	IN	IN	OUT	*
37Ø	OUT	IN	IN	IN	IN	IN	*
4ØØ	IN	OUT	OUT	OUT	OUT	OUT	*
41Ø	IN	OUT	OUT	OUT	OUT	IN	*
42Ø	IN	OUT	OUT	OUT	IN	OUT	*
43Ø	IN	OUT	OUT	OUT	IN	IN	*

* ALWAYS IN FOR M7821 IN LOCATION AØ6

M7277

DH11-A ADDRESS OUT=1 IN=Ø

BITS 8,9,10,11,12 ARE ALL IN

	7	6	5	4
76Ø Ø2Ø	IN	IN	IN	OUT
Ø4Ø	IN	IN	OUT	IN
Ø6Ø	IN	IN	OUT	OUT
1ØØ	IN	OUT	IN	IN
12Ø	IN	OUT	IN	OUT
14Ø	IN	OUT	OUT	IN
16Ø	IN	OUT	OUT	OUT
2ØØ	OUT	IN	IN	IN

M1Ø5

DH11-BB ADDRESS OUT=1 IN=Ø

BITS 6,8, & 12 ARE ALL OUT

BITS 7,9,1Ø, & 11 ARE ALL IN

	5	4	3
77Ø 5ØØ	IN	IN	IN
51Ø	IN	IN	OUT
52Ø	IN	OUT	IN
53Ø	IN	OUT	OUT
54Ø	OUT	IN	IN
55Ø	OUT	IN	OUT
56Ø	OUT	OUT	IN
57Ø	OUT	OUT	OUT

M596 OR M596Ø
JUMPER FOR MECHANICAL
CONTACT NOISE FILTERING
REMOVE FOR SPEEDS GREATER
THAN 15Ø BAUD.
(CAN ALSO BE REMOVED AT LOWER
SPEEDS IF NOISE IS NOT A PROBLEM)

LINES	M596	M596Ø	
Ø,4,8,12*	W4	W2	IN FOR FILTERING
1,5,9,13	W2	W4	OUT FOR HIGH SPEEDS
2,6,1Ø,14	W1	W3	
3,7,11,15	W3	W1	

*OR WHEN USED DF11-F

PDP-11 BIT TO OCTAL DIGIT CORRESPONDENCE

BIT →	17	16	15	14	13	12	11	1Ø	Ø9	Ø8	Ø7	Ø6	Ø5	Ø4	Ø3	Ø2	Ø1	ØØ
EXAMPLE	1	1	1	1	1	Ø	Ø	Ø	Ø	Ø	Ø	Ø	Ø	1	Ø	Ø	Ø	Ø
OCTAL DIGIT →	6th			5th			4th			3rd			2nd			1st		
EXAMPLE	7			6			Ø			Ø			2			Ø		

NOTE: I/O DEVICE ADDRESS IN 11 LITERATURE ARE VARIOUSLY GIVEN AS 76Ø ØØØ THRU 777 777
AND AS 16Ø ØØØ THRU 177 777.
THESE ARE EQUIVALENT IN MACHINES WITHOUT MEMORY MANAGEMENT. WHEN EVER
BITS 15,14 AND 13 ARE ALL "1" (16x xxx OR 17x xxx) THE PROCESSOR ALSO MAKES BITS
17 AND 16 "1" (76x xxx OR 77x xxx). [ON MACHINES WITH MEMORY MANAGEMENT (NOT
STANDARD DC76) I/O DEVICE ADDRESSES ARE IN PHYSICAL MEMORY AT 76Ø ØØØ THRU 777 777.
THEY ARE ONLY AVAILABLE TO A PROGRAM IF SOME VIRTUAL ADDRESS AREA IS MAPPED INTO
THIS PHYSICAL AREA.]

DH11 JUMPERS AND MODIFICATIONS.

G736Ø LOCATION AØ7 OR M5906 LOCATION AB07 (DH11 AD,AE)OPTIONS
BR LEVEL SELECT BOARD
BOTH BR PLUGS SHOULD BE
54Ø8778 (LEVEL #5)
(AS SUPPLIED STANDARD)

M7821 LOCATION AØ6
VECTOR LOCATION
W2 BIT 2 IN (ALWAYS)
W3 BIT 3 } IN FOR "1"
W4 BIT 4 } OUT FOR "Ø"
W5 BIT 5 } SEE TABLE
W6 BIT 6 } OF DH11 VECTORS
W7 BIT 7 }
W8 BIT 8 }
W9 NPR SPEED UP:IN EXCEPT
WHEN 11/15 (KC11) OR 11/2Ø (KA11)
PROCESSOR WITHOUT KH11 OPTION IS
USED. THEN OUT.

M7821 LOCATION AØ2
NPR CONTROL
ALL JUMPERS ARE "DON'T CARE"
ON THIS MODULE

DH11-AD MODEM CONTROL ADDRESS AND VECTORS
M7807 LOCATION C,D,E,FØ1
VECTOR LOCATION
W2 BIT2 }
W3 BIT3 } IN FOR "1"
W7 BIT4 } OUT FOR "Ø"
W6 BIT5 } SEE TABLE
W4 BIT6 } OF DM11-BB VECTORS
W5 BIT7 }
W1 BIT8 }
ADDRESS LOCATION
W15 BIT3 }
W12 BIT4 }
W13 BIT5 } IN FOR "Ø"
W16 BIT6 } OUT FOR "1"
W17 BIT7 } SEE TABLE
W10 BIT8 } OF DM11-BB ADDRESSES
W9 BIT9 }
W11 BIT1Ø }
W14 BIT11 }
W8 BIT12 }

M7277 LOCATION ABCDEFØ4
REGISTER ADDRESSES
"4" BIT 4 }
"5" BIT 5 } OUT FOR "1"
"6" BIT 6 } IN FOR "Ø"
"7" BIT 7 } SEE TABLE OF DH11 ADDRESSES
"8" BIT 8 }
"9" BIT 9 }
"1Ø" BIT 1Ø }
"11" BIT 11 }
"12" BIT 12 }

M796 LOCATION BØ2
UNIBUS MASTER CONTROL
DATA STROBE LENGTH 4ØØns NOMINAL
ADD 1ØØ pF 5% MICA CAPACITOR DEC P.N. 1ØØØØ16
ACROSS SPLIT LUGS NEAR FRONT OF BOARD

TAG MODULE WITH TAG WHICH SAYS "MODIFIED MODULE
1ØØpF ADDED FOR 4ØØns STROBE.

DM11-BB DATA SET CONTROL (OR M7807 IN DH11-AD)
LOCATED IN DH11-A
M1Ø5 LOCATION EØ1
"3" BIT 3 } IN FOR "Ø"
"4" BIT 4 } OUT FOR "1" SEE TABLE OF DM11-BB ADDRESSES
"5" BIT 5 }
"6" BIT 6 OUT }
"7" BIT 7 IN } 5
"8" BIT 8 OUT }
"9" BIT 9 IN } Ø
"1Ø" BIT 1Ø IN }
"11" BIT 11 IN }
"12" BIT 12 OUT }
} 7

M7821 LOCATION FØ1
VECTOR LOCATION
W2 BIT 2 } IN FOR "1"
W3 BIT 3 } OUT FOR "Ø"
W4 BIT 4 } SEE TABLE OF DM11-BB VECTORS
W5 BIT 5 OUT }
W6 BIT 6 IN }
W7 BIT 7 IN } 3
W8 BIT 8 OUT }
W9 NPR SPEEDUP:IN
EXCEPT WHEN 11/15 (KC11) OR
11/2Ø (KA11) PROCESSOR
WITHOUT KH11 OPTION
IS USED. THEN OUT.

FIRST USED ON OPTION/MODEL	QTY.	DESCRIPTION	PART NO.	ITEM NO.
PDP11		PARTS LIST		

DIMENSIONAL TOLERANCE
DIMENSIONS ARE MILLIMETERS / INCHES
UNLESS OTHERWISE SPECIFIED

MILLIMETERS	INCHES	ANGLES
X.XX = ±0.10	.XXX = ±.005	±0° 30'
X.X = ±0.5	.XX = ±.02	
X = ±2	.X = ±.1	

THIRD ANGLE PROJECTION
REMOVE BURRS AND BREAK SHARP CORNERS SURFACE QUALITY ✓
MATERIAL —
FINISH —

		DATE
DRN.	R. PUDELKO	2-12-73
CHK'D.	K.GLEESON	2-22-73
ENG.	J. MCNAMARA	2-22-73
PROJ. ENG.	J. MCNAMARA	2-22-73
PROD.	J. BORENSTEIN	2-23-73

NEXT HIGHER ASSY. B-DD-DH11-Ø
SCALE —
SHEET 14 OF 14

digital

TITLE
BASIC ASSEMBLY
DH11 IN H960

SIZE	CODE	NUMBER	REV.
D	UA	DH11-Ø-Ø	F

DIST.

REVISIONS
REV. | CHANGE NO. | CHK

THE INFORMATION HEREIN IS THE PROPERTY OF DIGITAL EQUIPMENT CORPORATION AND SHALL NOT BE REPRODUCED OR USED IN WHOLE OR IN PART WITHOUT WRITTEN AUTHORITY FOR THE MANUFACTURE OF SALE OF DIGITAL EQUIPMENT CORPORATION.
©1973 DIGITAL EQUIPMENT CORPORATION

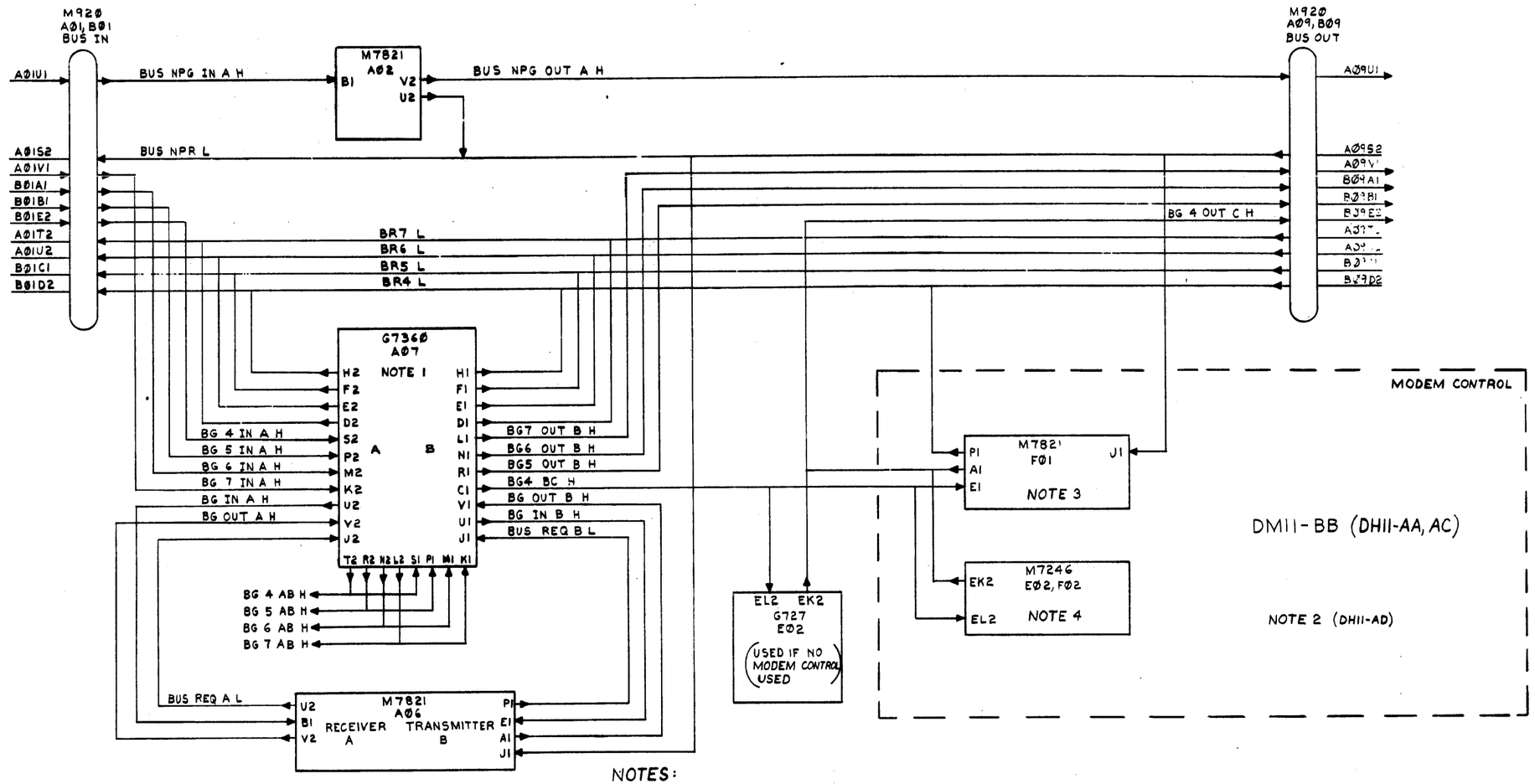

NOTES:

1. THIS IS PART OF AN M5906 FOR THE DH11-AD AND AE OPTIONS; THIS IS G7360 FOR DH11-AA,-AB,-AC OPTIONS.
2. THE MODEM CONTROL CONSISTS OF THE M7807 AND M7808 MODULES FOR THE DH11-AD OPTION.
3. THIS IS AN M7807 FOR THE DH11-AD OPTION.
4. THIS IS AN M7808 FOR THE DH11-AD OPTION.

FIRST USED ON OPTION/MODEL	QTY.	DESCRIPTION	PART NO.	ITEM NO.
PDP 11		PARTS LIST		

UNLESS OTHERWISE SPECIFIED DIMENSION IN INCHES
TOLERANCES
DECIMALS: .XXX = .005, .XX = .02, .X = .1
ANGLES: ±0° 30'
REMOVE BURRS AND BREAK SHARP CORNERS SURFACE QUALITY ▽

MATERIAL
FINISH

DRN. DATE 2-9-73
CHK'D. DATE
ENG. DATE 2/22/73
PROJ. ENG. DATE 2-22-73
PROD. DATE 2-23-73

NEXT HIGHER ASSY. B-DD-DH11-0
SCALE NONE
SHEET 1 OF 1

digital EQUIPMENT CORPORATION MAYNARD MASSACHUSETTS

TITLE DH11 UNIBUS INTERFACE

SIZE D CODE BD NUMBER DH11-0-12 REV. 6

CHK	CHANGE NO		
	DH11-00002	A	J. MCNAMARA 8-6-73
	DH11-C0007	B	11-5-74
	DH11-00011	C	J. MCNAMARA 19 JULY 74
			J. MCNAMARA 7-25-76

DEC FORM NO DRD 03 C

"THIS DRAWING AND SPECIFICATIONS, HEREIN, ARE THE PROPERTY OF DIGITAL EQUIPMENT CORPORATION AND SHALL NOT BE REPRODUCED OR COPIED OR USED IN WHOLE OR IN PART AS THE BASIS FOR THE MANUFACTURE OR SALE OF ITEMS WITHOUT WRITTEN PERMISSION. COPYRIGHT © 1973, DIGITAL EQUIPMENT CORPORATION"

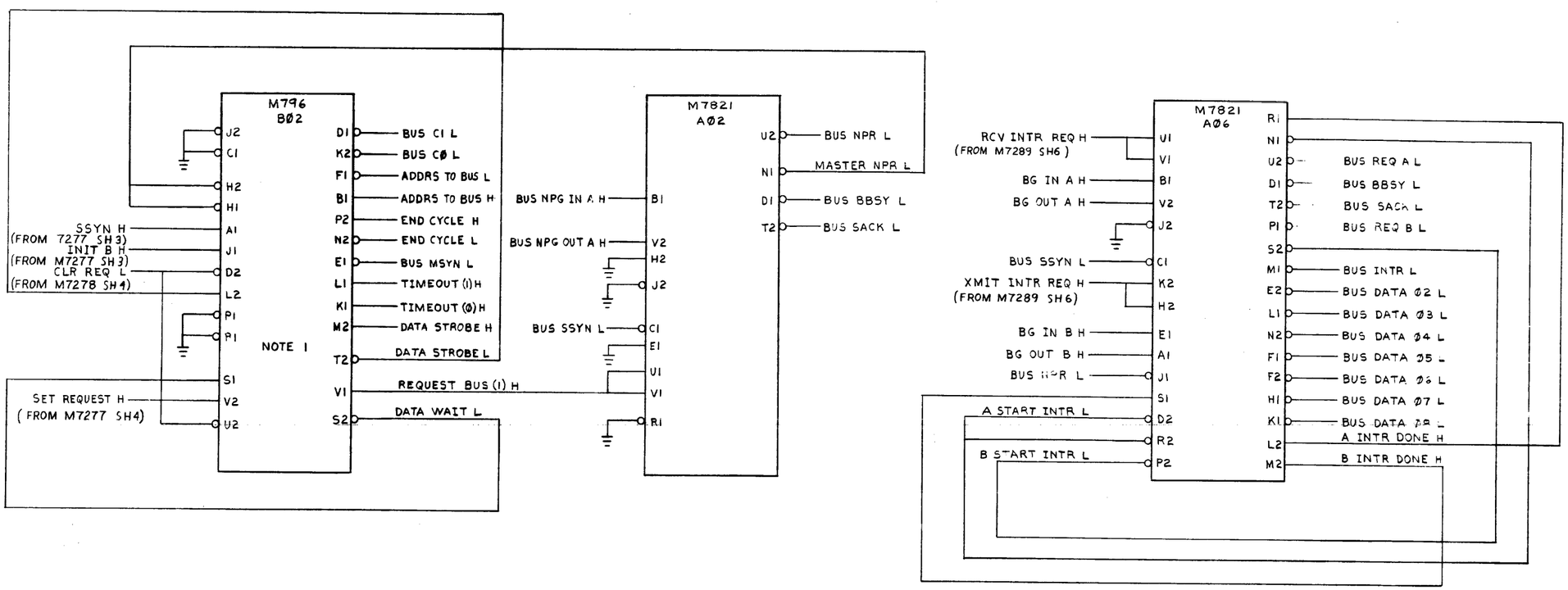

NOTES:

1. A 100PF CAPACITOR IS TO BE INSTALLED ACROSS SPLIT LUG TERMINALS ASSOCIATED WITH E8 ON THE M796. THIS LENGTHENS DATA STROBE TO APPROX 400 NS.

REVISIONS		
CHK	CHANGE NO	REV

TITLE	SIZE	CODE	NUMBER	REV.
DH11 UNIBUS INTERFACE	D	BD	DH11-0-12	C
SCALE NONE	SHEET 2 OF 3	DIST.		

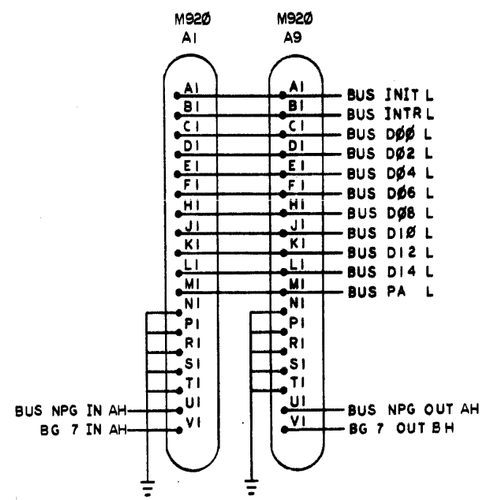

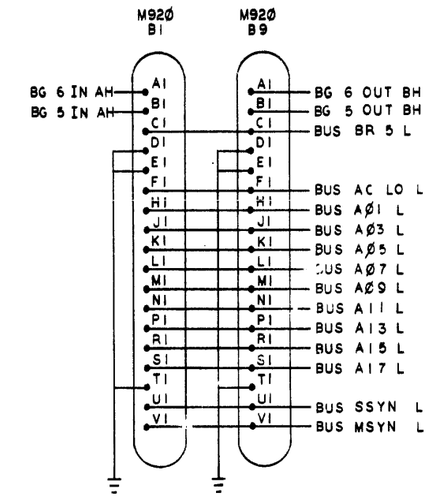

NOTES:
1. THE UNIBUS CONNECTOR IS A DOUBLE HEIGHT MODULE.
2. IF DH11 IS LAST DEVICE ON THE BUS, TERMINATOR (M930) MODULE PLUGS IN SLOTS A9-B9.

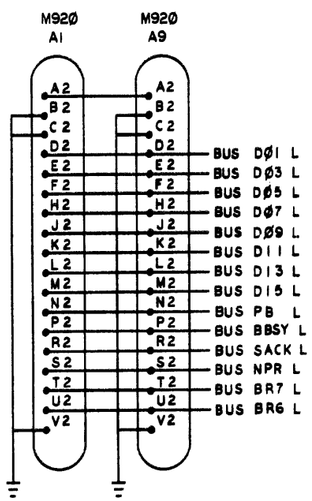

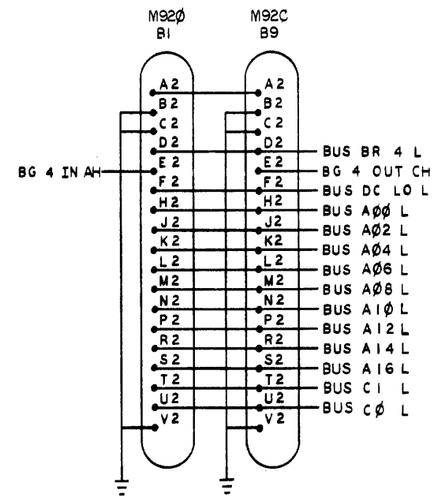

FIRST USED ON OPTION/MODEL	QTY.	DESCRIPTION	PART NO.	ITEM NO.
DH11		PARTS LIST		

UNLESS OTHERWISE SPECIFIED DIMENSION IN INCHES
TOLERANCES
DECIMALS: .xxx = .006, .xx = .02, .x = .1
ANGLES: ±0° 30'
REMOVE BURRS AND BREAK SHARP CORNERS SURFACE QUALITY ✓
MATERIAL —/—/—
FINISH —/—/—

DRN. R PUDELKO DATE 2-9-73
CHK'D. K GLEEZEN DATE 2-22-73
ENG. W. SMITH DATE 2-22-73
PROJ. ENG. J. MCNAMARA DATE 2-22-73
PROD. J. BORNENSTEIN DATE 2-23-73
NEXT HIGHER ASSY. B-DD-DH11-Ø
SCALE NONE
SHEET 3 OF 3

digital EQUIPMENT CORPORATION MAYNARD, MASSACHUSETTS

TITLE DH11 UNIBUS INTERFACE

SIZE	CODE	NUMBER	REV.
D	BD	DH11-Ø-12	C

DIST.

REVISIONS: KEY | CHANGE NO | CHK

DEC FORM NO DEL 133 A

FOR TEST AND MAINTENANCE PURPOSES THE
AND SHOULD BE TREATED ACCORDINGLY
CORPORATION

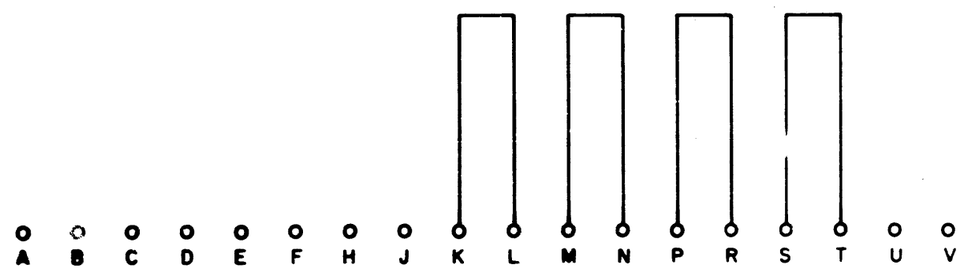

REVISIONS			
REV			
CHG NO			
CHK			

DRN.	BUTLER	DATE 11-19-66
CHK'D		DATE 6-FEB-70
ENG.		DATE 1/29/70
PROD.		DATE

TRANSISTOR & DIODE CONVERSION CHART

DEC	EIA	DEC	EIA

digital
EQUIPMENT CORPORATION
MAYNARD, MASSACHUSETTS

TITLE
GRANT CONTINUITY G727

SIZE	CODE	NUMBER	REV
B	CS	G727-0-1	

PRINTED CIRCUIT REV A

DEC FORM NO

5 PINK DIST. 324, 434, 435 3

This drawing and specifications, herein, are the property of Digital Equipment Corporation and shall not be reproduced or copied or used in whole or in part as the basis for the manufacture or sale of items without written permission.

DIGITAL EQUIPMENT CORPORATION
MAYNARD, MASSACHUSETTS

ENGINEERING SPECIFICATION

DATE 2-2-73

TITLE DH11 Module Test Procedure

REVISIONS

REV	DESCRIPTION	CHG NO	ORIG	DATE	APPD BY	DATE
A	CHANGE PER ECO	DH11-00007	MCNAMARA	10/74	[illegible]	11-5-74

ENG.	APPD	SIZE	CODE	NUMBER	REV
[illegible] 2-5-73	[illegible]	A	SP	DH11-0-11	[illegible]

DEC FORM NO. DRA 107

ENGINEERING SPECIFICATION [redacted] CONTINUATION SHEET

TITLE DH11 Module Test Procedure

I. Equipment Required

A. A known good DH11
B. An oscilloscope - Techtronix 454 or better
C. Diagnostics DZDHA-A-D through DZDHI-A-D
D. PDP-11
E. Diagnostic DZDHK, H861 test connector, and 4 BC08R-12 cables.

Note: Users of this procedure in the field should run all of the diagnostics, starting with DZDHA. If that fails, refer to the section of this procedure entitled "DZDHA Failures". After making any repairs necessary to get DZDHA to run, run diagnostic DZDHB. If it fails, refer to "DZDHB Failures", etc.

II. Procedure

A. Find the module to be tested in the list given in Section III below. Run the diagnostics as indicated, following the directions in the diagnostics for diagnostic start-up and switch settings. See "Note" on next page before starting.

III. Modules of the DH11 and Their Functions

A. M7277 Address Selection, Initialize, Control Strobe Generation, Instruction Generation, Data Source Selection, Current Address.

Run DZDHA*,B*,C,D,E,G*,H,I without iterations

B. M7278 Byte Count Storage, Clear Buffer Active Register Logic, Transmitter Strobe, Buffer Active Register, Line Parameter Register, Break Control, Silo Status Register, All Gating to the Unibus, Silo Maintenance System.

Run DZDHA*,B*,C*,D,E,G*,H,I without iterations

C. M7279 First-In First-Out Buffer Memory (Silo), Silo Maintenance, Silo Fill Level, Receiver Interrupt.

Run DZDHA,C*,E,G*,H,I WITH iterations

D. M7280 Multiple UARTS

Run DZDHA,B,C,D,E*,G,H*,I WITH iterations

E. M7288 Speed Selection, Half-Duplex, Auto-Echo

Run DZDHA,C,D*,E,G,H*,I* without iterations

SIZE	CODE	NUMBER	REV
A	SP	DH11-0-11	A

DEC FORM NO DEC 16-(381)-1022-N370 DRA 108

ENGINEERING SPECIFICATION [redacted] CONTINUATION SHEET

TITLE DH11 Module Test Procedure

F. M7289 Auto-Echo System, Receiver Scanner, System Control Register, Half-Duplex

Run DZDHA*,B,C,D,E,G,H*,I* without iterations

G. M5906 EIA to TTL and TTL to EIA conversion for the 16 input and output data lines. The priority jumper plugs are also on this module.

This module is hand tested on the 9305931 (M5906 tester) and needs no further checking.

H. M7807 & M7808

These two modules are the modem control for the DH11-AD option

1. Connect four BC08R-12 cables to J1 & J2 on the M7807 and M7808 modules. Insert the other end of these cables into the H861 test connector.

2. Run DZDHK* with iterations. Run test group 0 and if any errors occur refer to the M7807 and M7808 circuit schematics. Also refer to the wire locator table at the end of this procedure. Run two passes without error.

Note: The pages which follow outline the action of the various diagnostics and suggest signals to look for in the case of errors. The following pages are exact copies of the DH11 Option Test Procedure, Parts 4 & 5 and are labelled as such.

Note: Tests marked with an asterisk (*), if run successfully, are a sufficient test of the module under test. The other diagnostics listed are convenient debugging aids should the module fail one of the * tests.

Note: Each diagnostic should run at least one pass with iterations without error.

SIZE	CODE	NUMBER	REV
A	SP	DH11-0-11	A

DEC FORM NO DEC 16-(381)-1022-N370 DRA 108

ENGINEERING SPECIFICATION [redacted] CONTINUATION SHEET

TITLE DH11 TEST PROCEDURE

E. Summary of the Diagnostics

1. DZDHA DH11 Static Logic Test
Running time: 1 sec. without iterations 35 sec. with iterations
Switch settings:

Switch	Action if set to one
15	Halt on error
14	Loop in the current test
13	Inhibit error typeout
11	Inhibit iterations
10	Escape to next test on error
09	Loop with current data
02	Restart program at selected test
01	Reselect vector and control register address after program restart

Tests 01 through 10 (octal) test each register of the DH11 for response.

Tests 11 through 14 test to make sure that the SCR, LPR, BCR, and SSR register can be cleared.

Tests 15 through 27 test the ability to set and clear bits 0, 1, 2, 3, 4, 5, 6, 9, 12, 13, and 15 (decimal) of the SCR.

Tests 30 through 34 test the ability in Maintenance Mode to set and clear bits 7, 8, 10, 11, and 14 (decimal) of the SCR.

Tests 35 through 37 test to make sure that bits 7, 10, 14 can only be cleared while in maintenance mode.

Tests 40 through 56 test the ability to set and clear bits of the Line Parameter Register one at a time.

Tests 57 through 76 test the ability to set and clear the bits of the Break Control Register one at a time.

Tests 77 through 105 test the ability to set and clear bits 0, 1, 2, 3, 4, 5, 15, of the Silo Status Register one at a time.

SIZE	CODE	NUMBER	REV
A	SP	DH11-0-11	A

DEC FORM NO DEC 16-(381)-1022-N370 DRA 108

Tests 106 through 124 set the Line Parameter Register to all ones and clear the bits one at a time.

Tests 124 through 144 do the same for the Break Control Register.

Tests 144 through 153 do the same for the Silo Status Register bits 0, 1, 2, 3, 4, 5, 15.

If a failure occurs, go to the section of this procedure marked "DZDHA Failures".

2. DZDHB DH11 Memory Test
Running time: 2 sec. without iterations, 25 sec. with iter.
Switch Settings: Same as DZDHA

Test 1 is the bus address memory addressing test. It loads each location in the bus address memory with the address of that location. The address is repeated every four bits. The test verifies that each location in the bus address memory was addressed.

Test 2 does the same thing to the byte memories as test 1 did to the current address memories.

Tests 3 through 22 set a 177777 address in bus address memory location Ø, verify it, clear it, verify that it is clear, then repeat for location 1, etc.

Tests 23 through 42 do the same for the byte count memory locations.

Test 43 is similar to tests 3 through 22 except that in addition to verifying that the selected location was set to 177777, a check is made to make sure that no data has appeared in any of the other bus address memory locations (they should all be clear except the one set to 177777).

Test 44 is the same as test 43 but uses 125252 as the test word.

Test 45 is the same as test 44 but uses 52525 as the test word

Tests 46, 47, 50 are the same as tests 43, 44, 45 but are applied to the byte count memories.

Tests 51 and 52 set all locations for the bus address memories (51) or byte count memories (52) to 177777 and then set selected location to Ø. No other location should change.

Tests 53, 54, and 55 test the ability to set and clear the memory extension bits.

In case of failure, consult the section of this procedure entitled "DZDHB Failures".

3. DZDHC DH11 Transmitter and Receiver Basic Logic Test
Running time: 23 sec. without iterations, 32 sec. with iter.
Switch settings: Same as DZDHA

Test 1 Set character available interrupt enable and verify that no interrupts occur.
Test 2 Same as test 1, but silo overflow interrupt enable.
Test 3 Same as test 2, but transmitter done interrupt enable.
Test 4 Set character available interrupt enable and then (in maintenance mode) set character available and then verify that an interrupt occurs.
Test 5 Same as 4, but silo overflow
Test 6 Same as 4, but transmitter interrupt enable/non-existant memory.
Test 7 Same as 4, but transmitter interrupt enable/ transmitter done.
Tests 10 through 27 set byte count for line Ø, set BAR bit for line Ø, verify BAR bit for line Ø clears, verify transmitter done set. This is done for line Ø, then 1, then 2, etc.
Tests 30 through 47 set byte count for all lines to 1, then set BAR bit for line Ø, verify that byte count for line Ø goes to Ø, that bus address for line 1 is incremented, and that all other byte counts and bus addresses are unchanged. This is done for line Ø, then line 1, line 2, etc.
Test 50 tests the silo maintenance mode by forcing a 1010101010101010 into the silo and verifies that the character available bit is set, that a character available interrupt occurs, that NRC bit 15 is set and that the 1010101010101010 pattern appears correctly in the Next Received Character (NRC) register.
Test 51 verifies that the silo up counter counts up correctly.

Test 52 verifies that the silo down counter counts down correctly.
Test 53 tests the silo alarm level alarm for 0, 1, 2, 4, 8, 16, and 32 characters to see that the alarm goes off (i.e., an interrupt occurs) at the proper fill level.

If a failure occurs, go to the section of this procedure marked "DZDHC Failures".

4. DZDHD DH11 Speed Selection Logic Test
Running time: 15 sec. without iterations, 1 min.55 sec. with iteration
Switch settings: Same as DZDHA

Test 1 tests to see that there is a clock for speed 1. It then sends three characters at a selected speed on line Ø. It verifies that transmitter done occurs at that selected speed and that the amount of time taken is less at this speed than at the previously selected speed. This is done for 15 (octal), 13 (decimal) speeds at increasing speeds.

Tests 2 through 15 are the same as test 1, but for lines 1, 2, 3, etc., up through line 14 (octal)

Tests 16 through 32 are similar to tests 1 through 15, but for one character, and receiver done is checked and timed rather than transmitter done.

If a failure occurs, consult the section of this procedure entitled "DZDHD Failures".

5. DZDHE DH11 Character Length and Basic Data Test
Running time:1 sec without iterations, 20 sec. with iterations
Switch settings: Same as DZDHA

Tests 1 through 100 transmit an all ones character at 9600 baud, changing first the character length (5 bit, 6 bit, 7 bit, 8 bit) on line Ø, then doing the same on line 1, etc.

If a failure occurs, consult "DZDHE Failures"

6. DZDHF DH11 Single Line Data Test
Running time: 50 min. 50 sec. without iter., 52 min.25 sec. with iterations
Switch settings: Same as DZDHA

Tests 1 through 20 transmit all 8 bit characters one at a time on lines Ø, 1, 2, etc.

Tests 21 through 40 transmit a block of 400 (octal) characters on line Ø, character length is 8 bits. Line speeds start at 50 baud and are incremented to 9600 baud. A block of 400 characters is transmitted at each speed. This process is repeated for lines Ø through 17 (octal).

Tests 41 through 60 transmit a block of 400 (octal) characters on line Ø; speed is 9600 baud; character length is 5 bits for the first 400 characters and is then changed to 6 bits, 7 bits, and 8 bits for future blocks of 400 characters. This process is repeated for lines Ø through 17 (octal).

If a failure occurs, consult "DZDHF Failures".

7. DZDHG DH11 Multi-Line Data Test
Running time: 4 sec. without iterations, 5 min.33 sec. with iterations
Switch settings: Same as DZDHA

Test 1 - In this test the silo alarm level is set to Ø. The receiver is to be serviced on a per character basis in interrupt mode. Transmitter interrupts are disabled. A binary count pattern of 400 (octal) characters is sent on all lines. Character length is 8 bits for all lines.

Test 2 - Same as test 1, but all lines are run at 9600 baud. Silo alarm level is set as high as possible. No receiver interrupt servicing, but rather characters are read from the silo as quickly as possible, testing the valid data bit of the Next Received Character register.

If a failure occurs, consult "DZDHG Failures".

8. DZDHH DH11 Auto-Echo Test
Running time:10 sec. without iterations,2 min. 40 sec. with iterations
Switch settings: Same as DZDHA

Tests 1 through 20 enable Auto-Echo on line Ø, transmit an 8 bit character on that line at 9600 baud, receive and verify that character. This continues until 64 characters have been received. Then disable auto-echo. Exactly one more character should be received. This is done for all 16 lines.

Tests 21 through 40 are similar to tests 1 through 20, but the data checked is a binary count pattern on all lines except that for which the auto-echo is being run. Lines are auto-echoed one line at a time while other transmissions take place.

Test 41 transmits one character on each line with auto-echo enabled. 64 characters are received on each line.

If a failure occurs, consult "DZDHH Failures".

9. DZDHI DH11 Break and Half-Duplex Test
Running time: 10 sec. without iter., 3 min. 25 sec. with iter.
Switch Settings: Same as DZDHA

Tests 1 through 20 test the break facility by first flushing the UART transmitter for a line by transmitting two nulls and setting the break bit for that line. A binary count pattern is transmitted. Only one character should be received and that should be a break character. This is done for each line sequentially.

Tests 21 through 40 set half-duplex on a line. A binary count pattern is transmitted. No characters should be received. This is done for each line sequentially.

If a failure occurs, consult "DZDHI Failures".

10. DZDHJ-DH11 echo test

This diagnostic contains a test which verifies that all characters (Ø-377 octal) will echo on each line (Ø-17 octal) with standard DH11 terminal attachments--TTY 33, 35 or VT05 etc.-- using ASII asynchronous code (110 baud with two stop bits and 300, 600, or 1200 baud with one stop bit only).

The starting address is 000200 octal.

Operational switch settings are:

SW15=1	Halt on error
SW13=1	Suppress error typeout
SW02=1	Reselect line number and baud rate
SW00=1	Change parameters at program restart

11. DZDHK-DH11 modem control test

This program is a test of the modem control multiplexer used with the DH11-AD option. The program is divided into functional test groups as follows:

Group 0: All line scanner and line multplexer functions are tested using the H861 test connector.

Group 1: A single line is tested using the modem cable and a H315 test connector.
Group 2: Connect-disconnect tests for 103A modems.
Group 3: Connect-disconnect tests for 202C modems.

The starting address is 000200 octal.

Operational switch settings are:

SW15=1	Halt on error
SW14=1	Loop current test
SW13=1	Suppress error typeout
SW11=1	Suppress iterations
SW10=1	Escape to next test on error
SW09=1	Freeze data

F. Failures

1. DZDHA Failures

a. If the following message is received-
ØØ1346 REGISTER DID NOT RESPOND
ADDRESS
76ØØ2Ø
this indicates that the PDP-11 processor did not receive a slave sync response from the DH11. The following checks should be made:

1.)

Was the address entered correctly when you responded to the questions asked in the opening dialogue of diagnostic DZDHA? The M7277 module (located in slot 04) is normally supplied with all nine address jumpers in place, making the DH11 address 160000. The following jumper cut table may be of use in verifying that the address cut into the M7277 matches the address you typed into the diagnostic.

Jumpers CUT	Address
None	160000
4	160020
5	160040
5-4	160060
6	160100
6-4	160120
6-5	160140
6-5-4	160160
7	160200
7-4	160220
7-5	160240
7-5-4	160260
7-6	160300
7-6-4	160320
7-6-5	160340
7-6-5-4	160360

Etc.

The numbers identifying the jumpers are located on the M7277 etch right underneath the jumpers. In the set of five jumpers located near the center of the board, the order top to bottom is: 8-11-12-10-9. In the set of four jumpers located

near the edge of the board, the order top to bottom is: 7-4-5-6.

2.)

If the address that you entered in the opening dialogue of the diagnostic agrees with the jumpered-in-address, reload the diagnostic making sure that there is no check sum error (i.e that the Bus Data lights on the computer console are all out when the tape loading finishes.) Now try the diagnostic again.

3.)

If the problem still exists, look at M7277 E72 pin 4. You should see a positive pulse about one-half microsecond long and occuring every five microseconds or so, when you run the following toggled-in program: (See Note A, Page 26)

5000/	12706	Set up stack	5014/	340	Set up
5002/	1000		5016/	6	for trap
5004/	12737	Set up for trap	5020/	5737	Test
5006/	5030		5022/	1600xx	DH register (Note 1)
5010/	4		5024/	137	Jump
5012/	12737		5026/	5020	to 5020
			5030/	2	RTI

4.)

If the pulse mentioned above occurs, use it as a trigger source while you look with a second scope channel at E72 pins 1, 2, and 5. At each of these there should be a high during the time that pin 4 is high. If these conditions are met, a negative pulse that is the complement of the positive pulse on pin 4 should appear as the output (pin 6). A shorter negative pulse should appear at E29 pin 10 along with some other pulses. Please note that if you look at E29 pin 10 without using a trigger source such as E72 pin 4 you will get useless information, as you will be seeing all of the slave syncs on the Unibus. What you are looking for is the slave sync that corresponds to the positive pulse (but is shorter) on E72 pin 4.

b. If the following message is received-
ØØ2312 MASTER CLEAR ERROR
EXP REC ADDRESS
ØØØØØØ 771377 76ØØ2Ø
this indicates that master clear was unable to clear the register named.

Note 1: The number used in location 5022 of the toggle-in program should be the address cited in the error message (see I.F.1.a on preceding page.)

1.)

The failure of master clear to clear a register is the result of one of several things. It could be that master clear is not being generated. It could be that the register is not being cleared despite the receipt of an initialize signal. It could be that the register is actually being cleared, but that the output of the register is not being properly presented back to the Unibus. The following procedures attempt to ascertain which of these effects is occuring.

Begin by toggling in the following program which will generate a programmed Unibus Initialize:

```
5000/        5 Reset
5002/      137 Jump
5004/     5000 to 5000
```

2.)

Look at M7277 pins EF2 and FV 2 for Initialize High, a pulse about 20 milliseconds long and occuring every 60 milliseconds or so. Also look at pins FR2 and FM2 for an Initialize Low pulse. If none of these pulses can be found, look at pin AA1 to see if Initialize is being generated on the Unibus. If all of these points show the proper signals, generate DH11 Initialize by toggling in the following program:

```
5000/        5 Reset        5006/  160020  the SCR
5002/    52737 BIS          5010/     137  Jump
5004/     4000 bit 11 in    5012/    5002  to 5002
```

3.)

Look at the pins mentioned above for the signals mentioned above (but slightly longer - about 2.4 microseconds). If these pulses are not seen at any of the above points, check pin FC1 for negative pulses of 2.4 microsecond duration. Check EL2 for positive pulses.

4.)

If M7277 pins EF2, FV2, FR2, and FM2 do show the proper signals, check the following logic:

If it is the SCR that is not being cleared, check M7289 E7, E11, E19, E41, E47, and E50.

If it is the Line Parameter Register (LPR) that is not being cleared, check the M7278 E37, E52, E59, and E61.

If it is the Break Control Register (BCR) that is not being cleared, check the M7278 E38, E51, E60, E67.

If it is the Silo Status Register (SSR) that is not being cleared, check the M7278 E53, E68, and E69.

5.)

For the IC's cited above, make sure that the initialize signal arrives (run the toggle program from section "2.)" above) and produces the proper clearing action.

6.)

Run the diagnostic looping on the current test when you get to the error-producing test. Re-do step 5.) above. If the bits cited by the diagnostic as being not cleared are in fact being cleared at the IC's mentioned above, the problem must be in the 74151 multiplexors in the M7278, the 8881's associated with those multiplexors, or in the Data Source Selection leads. On the M7278 print there is a signal called Data to Bus High (pin AB1). Use that as a trigger source while looking at the 8881 inputs for the bit that the diagnostic claims is not being cleared.

c. The remainder of the DZDHA test sets and clears the bits of the aforementioned registers one at a time. The following error message is typical:

```
002610  SYSTEM CONTROL REGISTER ERROR
EXP     REC     ADDRESS
ØØØØØ1  ØØØØØØ  76ØØ2Ø
```

1.)

In the case of such a message referring to the System Control Register (SCR), check the M7277 pins CP1 and CT2 for positive pulses while running the diagnostic on a loop of the failing test. These pins should have positive pulses somewhat shorter than one half microsecond. If these pulses are observed, check M7289 E7, E11, E19, E41, E47, E50 for proper clocking, proper input data, and proper operation. The input data comes from the "buffered data" buffers on the M7278.

2.)

In the case of the Line Parameter Register (LPR), check pin EP2 of the M7277 for positive pulses of less than one-half microsecond duration, while looping on the current failing test. Also check EH2 for a 300 nanosecond pulse. Also check ED1, EC1, EA1, etc. for the appropriate "Control Strobe" signal for the line in question. You may have to use the pulse at EH2 as a trigger source. If the appropriate pulses are found, check M7278 E37, E52, E59, and E61 for proper clocking, proper input data, and proper operation. To check input data, use control strobe as trigger.*

3.)

In the case of the Break Control Register (BCR), check M7277 pin FU1 for positive pulses, and check M7278 E38, E51, E60, and E67 for proper clocking, input data, and operation.

4.)

In the case of the Silo Status Register, check M7277 pins CP2 and CR1 for positive pulses, and M7278 E53, E68, and E69 for proper clocking, input data, and operation.

5.)

If proper results are obtained in following the procedures outlined above, check the 74151 multiplexors and 8881's as described in section "b.6.)" above.

*NOTES:

ALL PROBLEMS ENCOUNTERED IN RUNNING DZDHA MUST BE SOLVED BEFORE RUNNING ANY OTHER DIAGNOSTICS.

ETCH SHORTS, PADS THAT TOUCH, ETC. ARE FAR MORE COMMON THAN BAD ICs.

TO CHECK INPUT DATA AT A FLIP-FLOP USE THE CLOCK LEAD TO THAT FLIP-FLOP AS A TRIGGER (ONCE YOU KNOW THAT THERE IS A SIGNAL ON THAT CLOCK LEAD). OTHERWISE YOU WILL SEE ALL OF THE BUFFERED DATA SIGNALS FROM THE UNIBUS.

2. DZDHB Failures

a. It is assumed that diagnostic DZDHA has been run successfully.

b. If the following message is received-

```
ØØ1376 BUS ADDRESS MEMORY ERROR
EXP     REC     ADDRESS
Ø1Ø421  Ø1Ø42Ø   Ø1
```

this indicates failure to properly read or write the current address memories. If the following message is received-

```
ØØ1514 BYTE COUNT MEMORY ERROR
EXP     REC     ADDRESS
Ø1Ø421  Ø1Ø42Ø   Ø1
```

this indicates failure to properly read or write the byte count memories.

c. It is often useful to arrange the PDP-11 console switches to escape to the next test on error by setting switch 10 to the 1 state. After accumulating several error messages and writing down the received and expected data in binary instead of octal, conclusions can be drawn.

Example:

Diagnostic Output (Octal)		Binary Representation	
Expected	Received	Expected	Received
004376	004356	0000010011111110	0000010011101110
Expected	Received	Expected	Received
006233	006213	0000110010011011	0000110010001011

Notice that bit 04 is being dropped. If the problem is this simple or involves a few adjacent bits, go to paragraph "i" below.

d. If the "received" data is consistently all zeroes, it would be wise to look at M7277 pin EN2 "Data to Bus High" while running the following program that reads the current address:

```
5000/ 52737 BIS                    5016/160026 of CA to RØ
5002/  4000 Bit #11 in             5020/   137 Jump
5004/160020 the SCR                5022/  5000 to 5000
5006/ 13737 Mov contents
5010/177570 of SR to
5012/160026 the CA
5014/ 13700 Mov contents
```

If the aforementioned pin does have a signal (several hundred nanosecond positive pulse every few microseconds), run the diagnostic in a loop on the current (failing) test and look at E42. The signal should still be there, but not occuring so often. Using this signal as a trigger source, examine the 74151 multiplexors and the 8881 Unibus drivers; both of these on the M7278.

If the "received" data is not all zeroes but appears to bear little if any relationship to the expected data, follow the procedures outlined in steps e-f-g-h below.

e. For current address memory failures, run the toggled-in program from section d above. Look at the M7277 E48 pin 1. There should be positive pulses here, each several hundred nanoseconds long and occuring every few microseconds.

f. For byte count memory failures, do the same as step e above, but use the following toggled-in program-

```
5000/ 52737        5010/177570        5020/   137
5002/  4000        5012/160030        5022/  5000
5004/160020        5014/ 13700
5006/ 13737        5016/160030
```

and look for pulses again at M7277 E48 pin 1. This test and that above make sure that the current address and byte count memories are getting their selection information from the proper point. It is also important to loop the program on the failing test and make sure that the bits SCR 00, 01, 02, 03 progress properly from the System Control Register (M7289) to the inputs and outputs of M7277 E48.

g. For current address errors, run the following program which loads one current address register:

Use the toggle-in program from "d" above.

Look at E57 pin 1 for positive pulses of several hundred nanosecond duration. If the pulses are there, use them as a trigger to look at E50 pin 1 for a 60 nanosecond pulse that begins 90 nanoseconds after the E57 pin 1 pulse begins. This 60 nanosecond pulse is the write enable pulse to the current address memories.

h. For byte count errors, run the following toggle-in program which loads the byte count registers:

Use the toggle-in program from "f" above.

Look at M7278 pin CJ1 for positive pulses and at M7278 pin BT2 for 60 nanosecond pulses occuring 90 nanoseconds after the CJ1 pulses begin. These are the write enable pulses for the byte count memories.

When performing either test g or h, it is important to look at M7277 pin FK1 where 30 nanosecond positive pulses should occur at the conclusion of current address memory write enable pulses and byte count memory write enable pulse. Those 30 nanosecond pulses clear the "write current address" and "write byte count" flip-flops.

i. If, as explained in c above, a particular bit is incorrect, examine the logic associated with that bit. If the faulty bit is in a current address, examine the M7277. If it is in a byte count, examine the M7278. Run either the toggle program from g for current addresses or the toggle program from h for byte counts and check to see that load pulses are reaching the 74193 being used by the bit in question. Also make sure that a write enable pulse is reaching the 7489 involved.

Run the diagnostic, looping on the failing test, while examining the data paths for proper operation. Use the load pulse terminal (pin 11) of the 74193 as a trigger source while looking at data inputs to the 74157 (also be sure that 74157 pin 1 is high) and at the data inputs to the 74193.

3. DZDHC Failures

a. If any of the following messages occur-

```
ØØ1446 UNEXPECTED INTERRUPT
CONTROL REGISTER CONTENTS
ØØØ3ØØ  ØØØØØØ
```

a failure in the character available, silo overflow, and transmitter done interrupt circuitry is indicated. This logic is located on the M7289. Loop on the failing test and observe pin DD1, which should be high. E19 pin 6 should also be high. E50 pin 9 and pin 5 should be low.

If DD1 was low, examine the logic of the M7279 Silo Buffer. Likewise, the M7279 should also be examined if the signal at E50 pin 10 was not a constant high. Signals on E50 pin 4 come from the M7278 E14, and should be constantly high at this point in the testing. On the M7278 make sure that pin FV2 does <u>not</u> pulse while looking on the failing test.

b. If any of the following messages occur-

```
ØØ22Ø2 NO INTERRUPT
```

a failure in the interrupt generation circuitry is indicated. Loop on the failing test. If it is test 4, look at E31 pin 8 on the M7289. If the failing test is test 5, look at M7289 E31 pin 3. If the failing test is test 6, look at M7289 E48 pin 8. If the failing test is test 7, look at M7289 E48 pin 3. In each of the above cases, negative pulses (signal normally high, occasionally going down to zero) should be observed. The signal must not be either always high nor always low, as transitions are necessary for successful operation of the M7821 Interrupt Control module. If the negative pulses are found, look at pins DP1 and FM1 for positive pulses. If those pulses are found, try a new M7821 after examining the inputs to the M7821 for proper inputs and PROPER VECTOR JUMPERING. Remember that for the M7821 jumpers are left in to assert ones on the bus and removed to assert zeroes. For failures in the character available and silo overflow interrupts, be sure that there are positive transitions on M7821 pins [illegible]V1. For transmitter done and non-exist[illegible] memory interrupts, be sure that there are positive transitions on M7821 pins K3 and H2. The M7821 referred to is that located in slot A66.

c. If a failure message such as that below occurs-

```
ØØ315Ø  NO INTERRUPT
ØØ316Ø  TRANSMITTER DONE NOT SET
```

determine the line number and then verify that the BAR (Buffer Active Register) bit for that line actually gets set. This may be done by looping on the failing test and examining the BAR register on the M7278. Check for the generation of the transmitter finished pulse by running the following toggled-in program which sets the byte count for line zero to all ones and then to all zeroes.

```
5000/  52737  BIS                    5020/ 160030 to BC
5002/   4000  bit #11                5022/    137 Jump
5004/ 160020  in SCR                 5024/   5000 to 5000
5006/  12737  Move
5010/ 777777  all ones
5012/ 160030  to BC
5014/  12737  Move
5016/ 000000  all zeroes
```

See Note B, Page 26

Note that a permanent low on M7278 pin AS2 would cause the E14 one-shot to not fire. Pin AS2 should be always high. Look for transmitter finished pulses on pin AR1. Also look at the "Clear BAR Bit" signal appropriate to the line that the diagnostic reports is erring. Verify that the signal from pin AR1 causes pin FR 2 of the M7289 to go high and/or stay high.

d. If the following failure message occurs-

```
Ø1Ø12Ø  BYTE COUNT ERROR
EXP     REC
777777  ØØØØØØ
```

loop on the current test and examine the BAR bit (M72778) appropriate to the line for which the error is reported. This BAR bit should change back and forth between 1 and Ø during the test looping.

e. In the case of the following message-

```
Ø1333Ø  SILO DATA ERROR
EXP     REC
725252  7Ø64ØØ
```

the silo test pattern was not properly received. Loop on the failing test and look at M7278 pin CN2 which should have positive pulses. Observe pin FV2 for one microsecond negative pulses that occur as the result of the CN2 pulses. Look at M7279 pin AR1 for the same pulses that you observed on M7278 pin CN2. Using those pulses as a trigger, look at pins 4 and 9 of the following ICs on the M7279: E2, E7, E12, and E16. These points should be low for at least the duration of the pulses on AR1. Look at pins 7 and 12 of these same ICs for highs occuring for at least as long as the AR1 pulses. These checks confirm that the proper test pattern is being prepared for entry into the silo, that the silo maintenance bit is being set, and that the silo maintenance pulse is being generated.

f. The silo maintenance pulse is used in the DH11 receiver logic to simulate the finding of a data available flag, thus causing the silo logic to be cycled.

Observe pin FF1 on the M7289 for the same one microsecond negative pulses that you previously observed on pin FV2 of the M7278. Using these pulses as a trigger source, observe pin AJ2 (Load Silo L) where negative pulses should occur about 2 microseconds after the FF1 pulse. There will be a varying time between the FF1 pulse and the AJ2 pulse because the receiver scanner/receiver logic has to wait for a tick of the 2.54 mHz clock before commencing operation (make sure that there is such a clock signal arriving at the M7289) and this clock is in no way related to the instruction that set the silo maintenance bit and thus generated the silo maintenance pulse that appears on FF1.

Notice that the function of the FF1 pulse is to set Scanner Stop and thus cause the receiver sequencer (M7289 E21) to generate Load Silo L.

g. Confirm the existance of Load Silo L pulses at pin BJ2 of the M7279.

h. Be sure that there is a 5.068 mHz (period=200 nanoseconds) clock signal at pin BN1 of the M7279.

i. Be sure that there is -15 VDC at pin AB2 of the M7279.

j. Check pin BV2 of the M7279 to make sure that the Load Request flip-flop is being set and cleared. It gets set by the Load Silo L pulses (see G above).

k. Check BK2 for 30 nanosecond negative pulses occuring about 170 to 370 ns after load request sets. (You may wish to use the 5.068 signal as a trigger and turn up the intensity). Since these pulses clear Load Request, the negative transition of BV2 might also be a good trigger source.

l. Look at pin BK1 for positive pulses about a half microsecond wide. These are the program reading the NRC register and hence (hopefully) cycling a character out of the silo.

m. Observe pin AL1 for negative pulses, occuring throughout the looping on the failing test. If these pulses only occur when you first start the program, the silo is probably being filled up, perhaps indicating failure in the "Unload" circuitry.

n. Observe BL1 for positive pulses. These rely upon E9 pin 8 being low at times.

o. Observe BV1 for negative pulses. Trace the effects of these pulses through the M7289 logic.

4. DZDHD Failures

a. Be sure that the lead entitled "ZØ Baud" is ground and hence that the "TOP BUFF ZØ BAUD H" and "BOT BUFF ZØ BAUD H" signals are permanently high. Refer to the M7288 Circuit Schematic.

b. Check all "TOP BUFF" and BOT BUFF" signals at M7288 E66, E67, E69, E70, E73, E74, E75. Use the table on the first page of the M4540 Circuit Schematic to determine the proper periods for the various baud rates. Using an oscilloscope you will only be able to make an approximate measurement, but you will be able to determine which clock signal is which and that no two are crossed or interchanged.

c. Make sure that the aforementioned signals make it through to E4 and E2 at the appropriate pins.

d. Looping on the failing tests, make sure that the proper "BUFF LPR" signals exist at the inputs, that the Control Strobe signal occurs (300ns), that there is no noise on the control strobe signal, and that the outputs of the 74174 and 74175 of the falling line are being properly set.

e. Beware of the fact that the diagnostic detects problems by comparing the time it takes to transmit at one speed with the time it took at a previous speed. When an error is reported, it may be the speed tested prior to the present speed that was in fact in error.

Example: Assume the speeds should be 110, 134.5, 150 and that they are actually 110, 300, 150. The diagnostic will determine that things happened faster at speed 2 than at speed 1 (300 compared to 110), but when it gets to speed 3 (150) it will report an error. The actual problem is speed 2 where one finds 300 instead of 134.5.

5. DZDHE Failures

a. While looping on the failing test, look at CD2 of both UART cards for a 300 ns Control Strobe signal. Check the CN2, CJ1, CF2, CJ2, CF2 pins for proper parameter data.

b. Refer to DZDHG Failures for further tests.

6. DZDHF Failures

a. In most cases it should be possible to create failures at a faster rate using the DZDHG diagnostic. Try that. If fewer or no failures occur running the DZDHG for a time equal to that which you ran the DZDHF, the problem most likely concerns the loading of Line Parameters, since the DZDHF changes the line parameters whereas the DZDHG does not.

b. It will generally be beneficial to try the same procedures for troubleshooting DZDHF as DZDHG so it is recommended to follow the procedures below, even if you are running DZDHF.

7. DZDHG Failures

a. If difficulties occur with one line only, swap M7280 UART cards and see if the problem follows - i.e. that the problem moves from line 1 (Octal) to line 11 (Octal), etc.

b. Be sure that the transmit strobe signal to the UARTs is long enough. It must be 250 nanoseconds or more. Note that this requires an added capacitor on the M796 to generate a wider "Data Strobe". (This capacitor is 100 pf).

c. If difficulties occur on several lines, but only on one bit, check the buffered data leads, tran data leads, silo inputs, silo outputs, M7278 multiplexors, and M7278 Unibus drivers. Also check the auto-echo switch (M7277 E29 and E42), and the byte switch (M7277 E40 and E43).

d. Receipt of a character that is one lower than that expected may be a failure of the current address up-counter system to function properly or a failure of the byte switch (see above).

e. Receipt of a character one higher than expected might be a silo unloading problem; perhaps caused by noise on the Read NRC line or perhaps by improper one-shot times.

f. Check ALL oneshots for accuracy. They should be no more than 20% longer or 10% shorter than their nominal values. This is particularly true if they are on the short side and the unit is running in high temperatures.

g. Be sure that there is no crosstalk on the "Control Strobe" leads. (No noise pulses greater than 0.8 volts)

8. DEDMH Failures

a. If all of the previous diagnostics have run error-free, failures of this test can only be in a limited area.

b. Loop on the failing test and examine the M7288 line parameter board for the presence of a high on "AE ENAB" for the failing line.

c. Make sure that the above signal makes it to the E22 74154 multiplexor on the M7289. The following toggle-in program sets auto-echo enable on one line and allows the reciever scanner to run continuously.

```
5000/ 52737 BIS                 5022/    137  Jump
5002/  4000 bit #11             5024/   5006  to 5006
5004/160020 in SCR
5006/ 13737 Mov contents
5010/177570 of SR
5012/160020 to SCR
5014/ 52737 BIS
5016/ 10000 bit 15 (AE ENAB)
5020/160024 in LPR
```

Look at pin 10 of E22 on the M7289 for negative pulses (i.e. the signal is almost always high, but has occasional excursions down to nominal 0 volts).

d. Again operate the diagnostic, looping on the failing test. Look at M7289 E18 pins 2 & 6 and E10 pins 3 & 4 for highs. Look at E18 pins 10 & 14 for high. Some of these may be alternately high and low, but what is important now is that they are high at least sometimes.

e. Look at M7289 E14 pin 3 for low pulses, E2 pin 3 for high pulses, E2 pin 6 for low pulses, and E1 pin 4 for high pulses. If you are O.K. at E2 pin 3, but not further on, check E2 pin 5 for being high at the same time as pin 4 (this should occur). Check E1 pin 5 for being low at the same time as pin 6 (this should occur). If the proper signals cannot be found on E2 pin 5 or E1 pin 5, examine the receiver sequencer - E21.

M7289 E21 Waveforms:

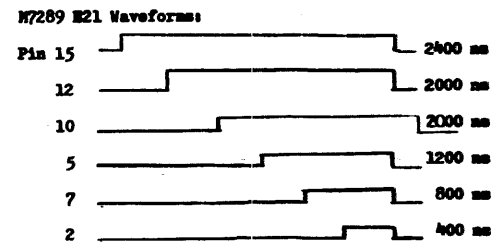

The above waveforms can only be observed if the scanner stop flip-flop E44 pin 5 is setting and clearing (i.e. the receiver scanner mechanism is servicing characters).

f. Trace the AE GO L lead and make sure that it causes M7289 E34 to switch the UART transmitter scan leads and that it causes M7277 E39 and E42 to switch the data source leads for the UART transmitters.

g. If the problem occurs with one line only, try swapping the M7280 UART cards to see if the problem follows - i.e. see if the problem that used to reported on line 7 (octal) is now found on line 17 (octal).

9. DEDHI Failures

a. If the following message is received-

```
##1524 BREAK DATA ERROR
EXP    REC
72#### 7#####
```

```
##1544 MORE THAN 1 CHARACTER RECEIVED
EXP    REC
#####  ######
```

it indicates that the break circuitry did not function properly.

b. Check the M7278 E38, E51, E60, and E67 to make sure that the break bit is being set for the failing line. Do this while looping on the failing test. Check M7278 E45, E46, E75, E76 to see if the setting of the break bit produces the appropriate high on the "TTL DATA OUT" lines. The 7400 gates E45, E46, E75, E76 are normally kept qualified by the high state of the $\overline{Q}$ outputs from the 74175's that comprise the Break Control Register. Setting of a bit in

the Break Control Register brings the appropriate $\overline{Q}$ output to the low state, disabling the 7400 gate and placing a permanent high on the TTL DATA OUT line. The logic convention of the TTL DATA OUT lines is such that a high = space = 0 = BREAK.

c. If the following message is received-

```
##6244 RECEIVER NOT ELINDED
```

it indicates that the half-duplex logic did not function correctly.

d. While looping on the failing test, check the M7288 to make sure that the "Half-Duplex" bit for the failing line is being set.

e. Check the M7289 to make sure that End of Character is being received from the UART that serves the failing line. If in doubt, swap the M7280 UART cards and see if the diagnostic now reports the error on line 11 instead of 1, 12 instead of 2, etc. (The diagnostic reports line numbers in Octal) Also check the M7289 E8, E20, E32, E42 to make sure that the half-duplex enable and end of character signals are disabling the E4, E16, E28, E39 gating appropriate to the erring line. End of Character is low while the UART is transmitting a character and comes high very briefly between characters. Loop on a test of a working line if you desire to see what it should look like.

Make all of the above examinations while looping on the failing test, unless otherwise instructed.

Note A: If the DH11 is not decoding the address being sent by the diagnostic, E72 pin 4 will have no pulses. If the DH11 is decoding the address but not sending Slave Sync back to the processor, the pulse will be about 25 microseconds long and occur every 45 microseconds or so. If proper response is occurred, times will be as indicated in F.1.a.3) on page 11.

Note B: As indicated in the description of this test, this program tests only the effect of zeroing the byte count on line ##. To test other lines, replace the first three instructions of the program given with:

```
5000   13737  Move contents of
5002  177570  The switch register to
5004  160020  The SCR
```

Toggle the desired line number into the switch register.

TABLE I
WIRE LOCATOR

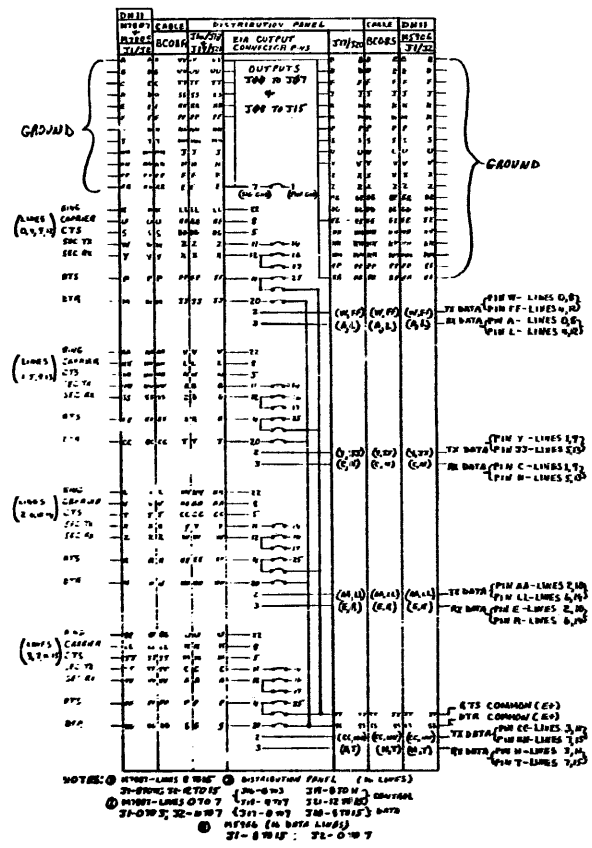

THE DRAWING AND SPECIFICATIONS HEREIN ARE THE PROPERTY OF DIGITAL EQUIPMENT CORPORATION AND SHALL NOT BE REPRODUCED OR COPIED OR USED IN WHOLE OR IN PART AS THE BASIS FOR THE MANUFACTURE OR SALE OF ANYTHING WITHOUT WRITTEN PERMISSION.
©1973 DIGITAL EQUIPMENT CORPORATION

NOTES:

1. WIREWRAP ONE END OF ITEM #5 TO PIN F02T1 AND SOLDER THE OTHER END TO ITEM #4 WHICH IS MOUNTED UNDER THE SYSTEM UNIT MOUNTING SCREW.
2. DC LO TAB IS POSITIONED DIFFERENTLY THAN OTHER TABS

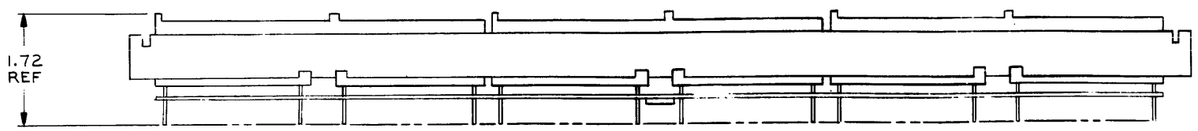

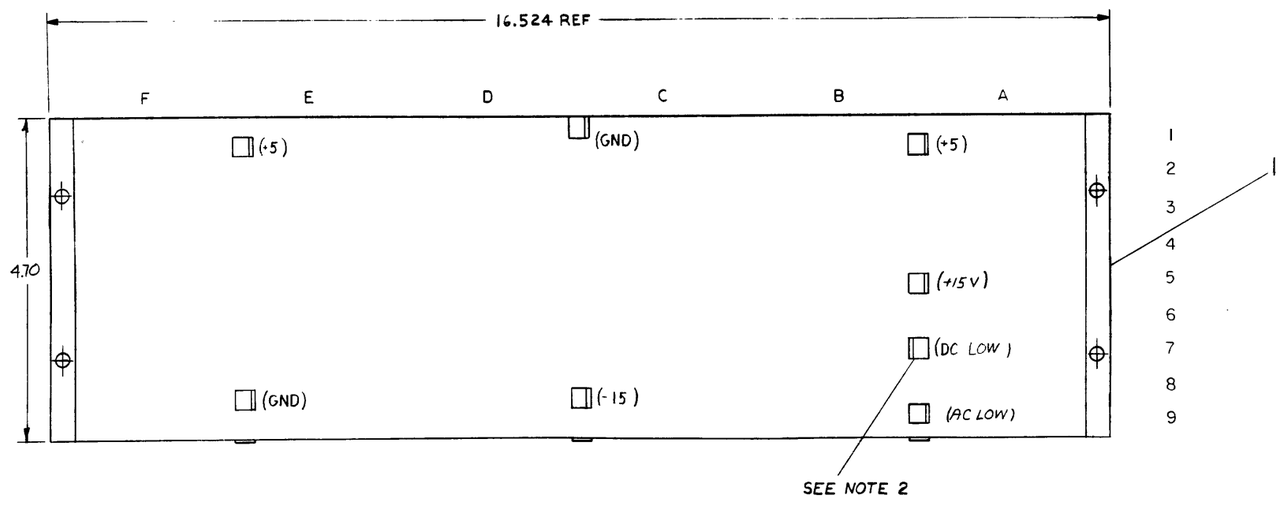

1/2	COMPRESS-O-CARTON	9905016-04	10
REF	PACKAGING INSTRUCTIONS	A-SP-3700040-0-0	9
1	DECAL LOGIC ASSY.	7411881-01	8
REF	AWT REVISION STATUS	A-WT-7009180-0	7
~~8~~	~~WIRE SHIELD~~	~~9009826~~	~~6~~
A/R	WIRE #24 AWG SOLID KYNAR INS BLK	9107688-00	5
1	TERMINAL LOCKING, SHAKEPROOF	9008150	4
1	WIRE LIST	K-WL-DH11-0-2	3
A/R	WIRE #30 AWG SOLID YEL	9105740-44	2
1	BACK PLANE ASSY	D-AD-7009182-0-0	1
QTY.	DESCRIPTION	PART NO.	ITEM NO.

PARTS LIST

FIRST USED ON OPTION/MODEL	PDP 11		
UNLESS OTHERWISE SPECIFIED DIMENSION IN INCHES TOLERANCES	DECIMALS: .xxx = .005, .xx = .02, .x = .1	ANGLES: ±0° 30'	
REMOVE BURRS AND BREAK SHARP CORNERS SURFACE QUALITY 1			
MATERIAL			
FINISH			
DRN.		DATE 1-15-73	
CHKD.		DATE 1/22/73	
ENG.		DATE 2-22-73	
PROJ ENG.		DATE 2-22-73	
PROD.		DATE 2-25-73	
NEXT HIGHER ASSY.	D-UA-DH11-Ø-Ø		
SCALE			
SHEET 1 OF 1			

digital EQUIPMENT CORPORATION MAYNARD MASSACHUSETTS

TITLE WIRED ASSY (DH11)

SIZE	CODE	NUMBER	REV.
D	IA	7009180-0-0	J

DIST.

1-2	DH11-00002	A	J. MCNAMARA	2-1-73
1-3	DH11-00005	B	MCNAMARA	2-14-74
1-4	DH11 00007	C	J. MC NAMARA	2-20-74
1-5	7009180-00001	D	B. MINOR	11-5-74
1-6	7009180-00002	E	B. MINOR	12-2-74
1-7	7009181-00003	F	J. MCNAMARA	1-2-75
1-8	7009180-00004	H	J. MCNAMARA	2-25-75
1-9	7009180-00005	J	B. Olsen	30 DEC 77
			J. MCNAMARA	20 JAN 78

THIS DRAWING AND SPECIFICATIONS HEREIN ARE THE PROPERTY OF DIGITAL EQUIPMENT CORPORATION AND SHALL NOT BE REPRODUCED OR COPIED OR USED IN WHOLE OR IN PART AS THE BASIS FOR THE MANUFACTURE OR SALE OF ITEMS WITHOUT WRITTEN PERMISSION. COPYRIGHT © 1979 DIGITAL EQUIPMENT CORPORATION

M97ØØ JUMPER FUNCTIONS

FUNCTIONS OF MODEM JUMPERS WHEN (INSTALLED)

A. EIA-SECONDARY TRANSMIT AND RECEIVE DATA LINES TO EIA PINS 14 AND 16

B. 202-SECONDARY TRANSMIT AND RECEIVE DATA LINES TO EIA PINS 11-12

C. 811-BELL 811B RESTRAINT FUNCTION IS MONITORED BY SECONDARY RECEIVE.

D. BUSY-BELL 103E FORCE BUSY FUNCTION DRIVEN BY REQUEST TO SEND

LEGEND		
NUMBER	VARIATION	
	DIM-X	DIM-Y (REF)
BCØIR-25	25' ± 3"	25' 3"
BCØIR-50	50' ± 2%	50' 3"

BCØIR WIRE TABLE

COLOR	P1-PIN	P2-LUG	SIGNAL NAME	P3-PIN	
BLU-WHT	1	6	GROUND	C2	
WHT-BLU	2	1	TRANSMITTED DATA	E2	
ORN-WHT	3	2	RECEIVED DATA	F2	
WHT-ORN	4	24	REQUEST TO SEND	L2	
GRN-WHT	5	14	CLEAR TO SEND	K2	
WHT-GRN	6	26	DATA SET READY	N2	
BRN-WHT	7	7	GROUND	C2	
WHT-BRN	8	18	CARRIER	P2	
SLA-WHT	9	15	+POWER (NOT USED)		
WHT-SLA	10	16	-POWER (NOT USED)		
BLU-RED	11	19	BELL 202 SEC. TRANS. DATA	E1	B
RED-BLU	12	21	BELL 202 SEC. RECV. DATA	F1	B
ORN-RED	13	11	SEC CLEAR TO SEND	K1	
SLA-RED	14	20	EIA SECONDARY TRANS. DATA	E1	A
SLA-GRN	15	3	SERIAL CLOCK TRANS.	H2	
RED-BRN	16	23	EIA SECONDARY RECV DATA	F1	A
SLA-	17	22	SERIAL CLOCK RECV.	J2	C*
RED-SLA	18	17	UNASSIGNED NOT USED		
BLU-BLK	19	12	SECONDARY REQUEST TO SEND	L1	
BLK-BLU	20	9	DATA TERMINAL READY	R2	
ORN-BLK	21	13	SIGNAL QUALITY DETECT	M1	
BLK-ORN	22	25	RING	M2	
GRN-BLK	23	8	SIGNAL RATE SELECT	S2	
BRN-RED	24	10	EXTERNAL CLOCK	H1	
RED-ORN	25	27	FORCE BUSY	S1	
SPECIAL					
SHIELD A	CUT	4	SHIELD A (GROUND)	C2	
SHIELD B	CUT	5	SHIELD B (GROUND)	C2	

NOTES:

1. IF USED FOR FOLLOWING OPTIONS CUT ALL JUMPER EXCEPT. (DC11, DP11, DM11-DB, DS10, DQ11 AND DS11)

   (2) 202 JUMPERS

   REF. NOTE #6

   DN11-(2) EIA JUMPERS DM11-DC/DM11-BB (2) 202 AND (1) 811 JUMPERS. FOR OTHER APPLICATIONS REFER TO CHART ON LEFT FOR M9700 JUMPER FUNCTIONS.
2. CIRCLED LETTERS ON RIGHT OF WIRE TABLE INDICATE THOSE PINS WHICH ARE DEPENDENT ON M9700 JUMPER FUNCTIONS AT LEFT.
   C* 811 JUMPER CONNECTS J2 TO F1
3. SOLDER #6 (CABLE) TO #1 (CONN. CARD), APPLY #4 (TAPE) AROUND #6 (CABLE), ASSEMBLE #2 (CABLE CLAMP) AND #3 (EYELETS) TO #1 (CONN. CARD) AFTER SOLDERING
4. ~~EACH SOLDERED CONNECTION ON P1 SHALL BE INSULATED WITH A 1½ INCH PIECE OF ITEM #5 (TUBING).~~
5. P1-15 AND P1-17 ARE SHIELDED LEADS
6. OLDER REV. BCØIR CABLES HAD "3Ø1" JUMPERS (M970 + BCØ5C-25). NEW REV. CABLES (M9700) HAVE THESE CONNECTIONS IN THE ETCH. DO NOT REMOVE 3Ø1 JUMPERS ON OLD REV. CABLES.

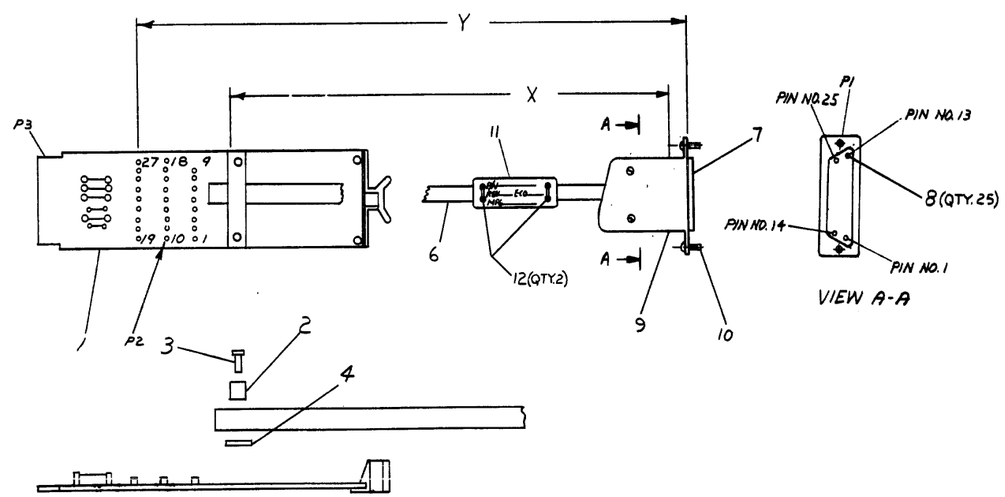

QTY.	DESCRIPTION	PART NO.	ITEM NO.
2	TIE, WRAP	9007031	12
1	CABLE, LABEL	9009532	11
1	SCREW, RETIANER (2/KIT)	1210493-51	10
1	HOOD WITH STRAIN RELIEF	1210493-50	9
25	PINS, 24 TO 28 AWG.	1210493-43	8
1	CONN. PLUG	1210493-31	7
~~1~~	~~CONN PLUG #DB25-P~~	~~1203888-6~~	~~8~~
~~1~~	~~HOOD, SINGL #DB25/1226-1~~	~~1203888~~	~~7~~
A/R	CABLE, 25 CONDUCTOR	9107736	6
~~A/R~~	~~SHRINKABLE TUBING~~	~~9107258~~	~~5~~
A/R	TAPE, DOUBLE SIDED ½"	9007834	4
2	EYELET A-94	9006741	3
1	CLAMP, CABLE	1202790-01	2
1	M9700 CABLE CONNECTOR	M9700	1

PARTS LIST

REV	CHG.	CHANGE NO.	REVISIONS
U		BCØIR-00003	REVISED & REDRAWN
E		BCØIR-00004	
F		BCØIR-00005	
H		BCØIR-00006	

SHAMMAS 8-13-79; SHAMMAS; J. MCINTIRE; V. BASTIANI 6-FEB-78

FIRST USED ON OPTION/MODEL	PDP11
UNLESS OTHERWISE SPECIFIED DIMENSION IN INCHES	TOLERANCES: DECIMALS .xxx = .005, .xx = .02, .x = .1; ANGLES ±0° 30'
REMOVE BURRS AND BREAK SHARP CORNERS SURFACE QUALITY √	
MATERIAL	— // —
FINISH	— // —
DRN. G FLANDERS	DATE 10-12-73
CHK'D. J FLEMING	DATE 10-16-70
ENG. V BASTEANI	DATE 10-16-73
PROJ. ENG. V BASTEANI	DATE 10-16-70
PROD. D CULL	DATE 10 16 70
NEXT HIGHER ASSY.	A-PL-DC11-DA-0
SCALE	— // —
SHEET	1 OF 1

digital EQUIPMENT CORPORATION MAYNARD MASSACHUSETTS

TITLE: CABLE CARD ASSY (BCØIR)

SIZE D | CODE UA | NUMBER BCØIR-Ø-Ø | REV. H | DIST.

SIZE D | CODE UA | NUMBER BCØIR-Ø-Ø | REV. H

This drawing and specifications, herein, are the property of Digital Equipment Corporation and shall not be reproduced or copied or used in whole or in part as the basis for the manufacture or sale of items without written permission.

NOTES:

1. DISTRIBUTION PANEL 7008443 AND POWER SUPPLY H758 SUPPLIED ONLY WITH DM11AA, DM11-AC
2. DCØ8 CS MUST BE ORDERED SEPARATELY DM11-AB DATA CABLE PLUGS INTO SLOTS A31, A32 OF DCØ8 CS FOR LINES ØØ TO LINE 15 OF DCØ8 CS. A SECOND DM11-AB PLUGS INTO THE DCØ8 CS AT SLOTS B31, B32 FOR LINES 16 TO 31.

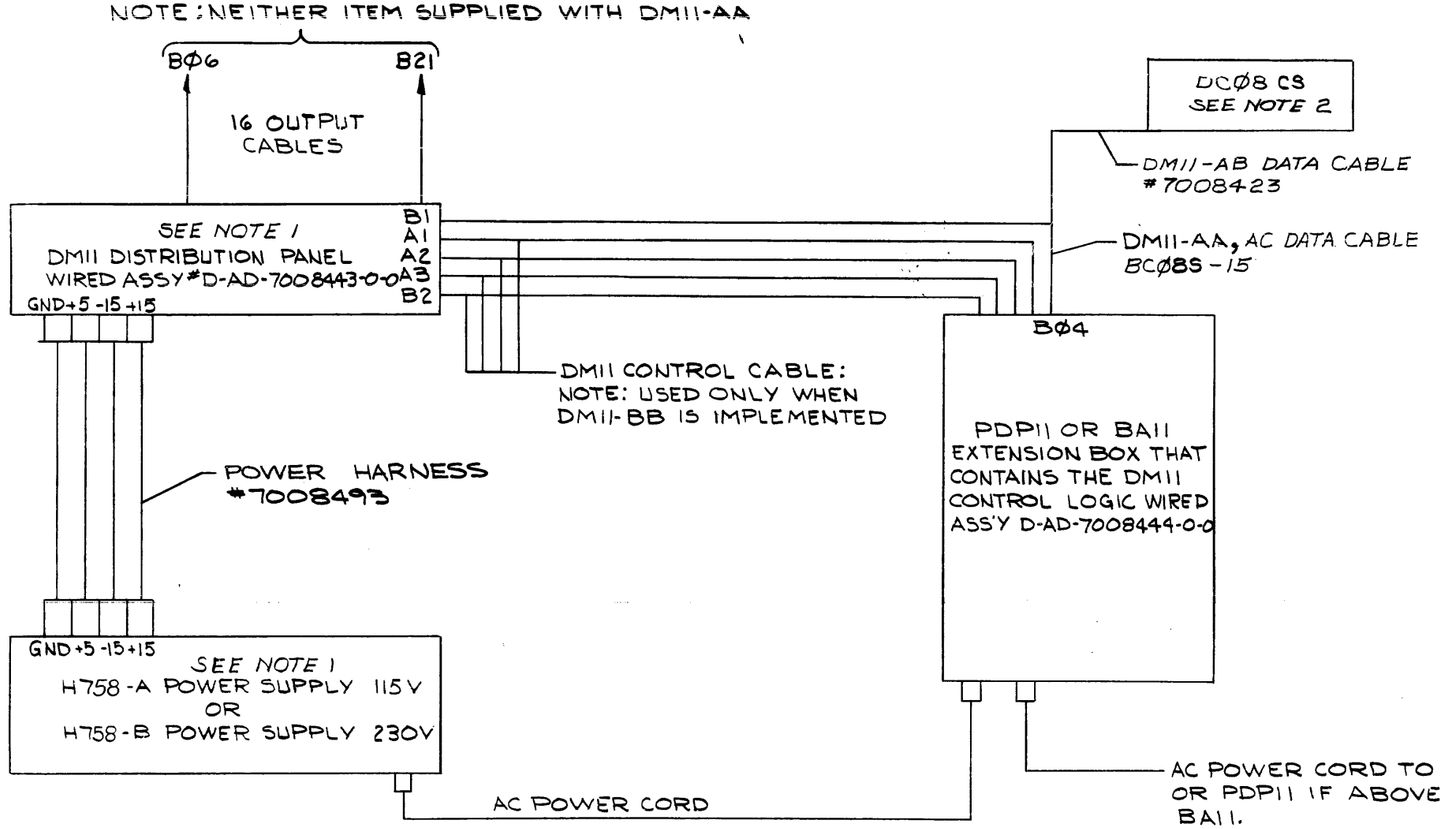

REV.	CHANGE NO.	CHK	
A	DM11A-00009		BASTIANI 2-11-72
B	DM11A-00013		BASTIANI 5-17-72
C	DM11A-00016		V. BASTIANI 8-22-73

FIRST USED ON OPTION/MODEL	QTY.	DESCRIPTION	PART NO.	ITEM NO.
DM11		PARTS LIST		

UNLESS OTHERWISE SPECIFIED DIMENSION IN INCHES. TOLERANCES

DECIMALS	ANGLES
.XXX = .005 .XX = .02 .X = .1	±0° 30'

REMOVE BURRS AND BREAK SHARP CORNERS SURFACE QUALITY ✓

MATERIAL —//—

FINISH —//—

DRN.		DATE 5/18/71
CHK'D		DATE 6-18-71
ENG.		DATE
PROJ. ENG.		DATE
PROD.		DATE
NEXT HIGHER ASSY.	A-ML-DM11-A	
SCALE —//—		
SHEET 1 OF 1		

digital EQUIPMENT CORPORATION MAYNARD, MASSACHUSETTS

TITLE INTERCONNECTION DM11

SIZE	CODE	NUMBER	REV.
C	IC	DM11-A-4	C

DIST.

DEC FORM NO. DRC 100-A

This drawing and specifications, herein, are the property of Digital Equipment Corporation and shall not be reproduced or copied or used in whole or in part as the basis for the manufacture or sale of items without written permission.

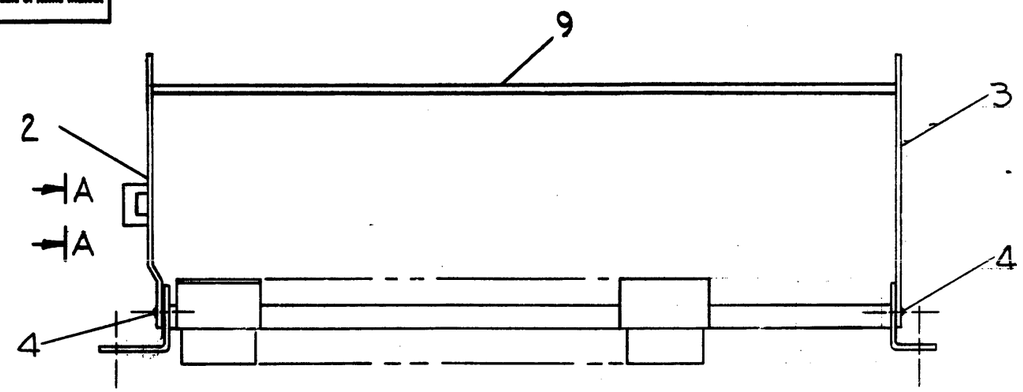

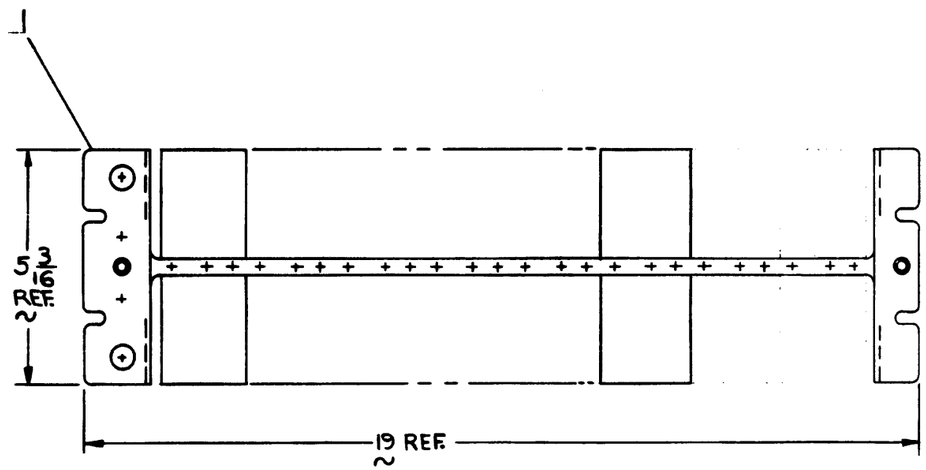

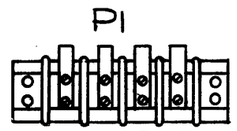

VIEW A-A

WIRE TABLE				
ITEM NO	DESCRIPTION AWG	DESCRIPTION COLOR	FROM CONNECTION	TO CONNECTION
5	18	BLK	P1- GND	AØ4C2
6	↓	RED	P1- +5	AØ4A2
6		RED	AØ4A2	BØ4A2
7		ORN	P1- +15	AØ4N2
7		ORN	AØ4N2	BØ4N2
8	↓	BLU	P1- -15	AØ4B2
8	18	BLU	AØ4B2	BØ4B2

QTY.	DESCRIPTION	PART NO.	ITEM NO.
1	HOLD DOWN BAR	D-MAD-1945-19-1	9
A/R	#18 AWG STRD TEF INS WIRE BLU	9107360-66	8
A/R	#18 AWG STRD TEF INS WIRE ORN	9107360-33	7
A/R	#18 AWG STRD TEF INS WIRE RED	9107360-22	6
A/R	#18 AWG STRD TEF INS WIRE BLK	9107360-00	5
8	RIVET POP #AD43 ABS	9006509	4
1	PANEL RIGHT END	C-MD-5308590-0-0	3
1	PANEL ASSY, LEFT END (4 TERM)	C-IA-5409593-0-0	2
1	WIRED ASSY	D-AD-7008443-0-0	1

PARTS LIST

FIRST USED ON OPTION/MODEL DM11

UNLESS OTHERWISE SPECIFIED
DIMENSION IN INCHES
TOLERANCES
DECIMALS ± .005 FRACTIONS ± 1/64 ANGLES ± 0°30'
FINAL SURFACE QUALITY ✓
REMOVE BURRS AND BREAK SHARP CORNERS

MATERIAL —//—

FINISH —//—

DRN. J. Hughes DATE 5/16/71
CHK'D. R. Cook DATE 6-14-71
ENG. V. Bastiani DATE 6/21/71
PROD. ENG. V. Bastiani DATE 6/21/71
PROD. Paul Howe DATE 6/22/71

NEXT HIGHER ASSY D-UA-DM11-A-Ø

SCALE —//—

SHEET 1 OF 1

digital EQUIPMENT CORPORATION
MAYNARD, MASSACHUSETTS

TITLE LOGIC ASSY

SIZE C CODE IA NUMBER 7008456-0-0 REV. B

DIST. 6

REVISIONS			
CHK	CHANGE NO.	REV.	
	DM11A-00010	A	
		B	
PA	7008456-00001	B	
	BASTIANI		

BRC FORM NO. CRS 109

SIZE C CODE IA NUMBER 7008456-0-0 REV. B

MK

©1972 DIGITAL EQUIPMENT CORPORATION

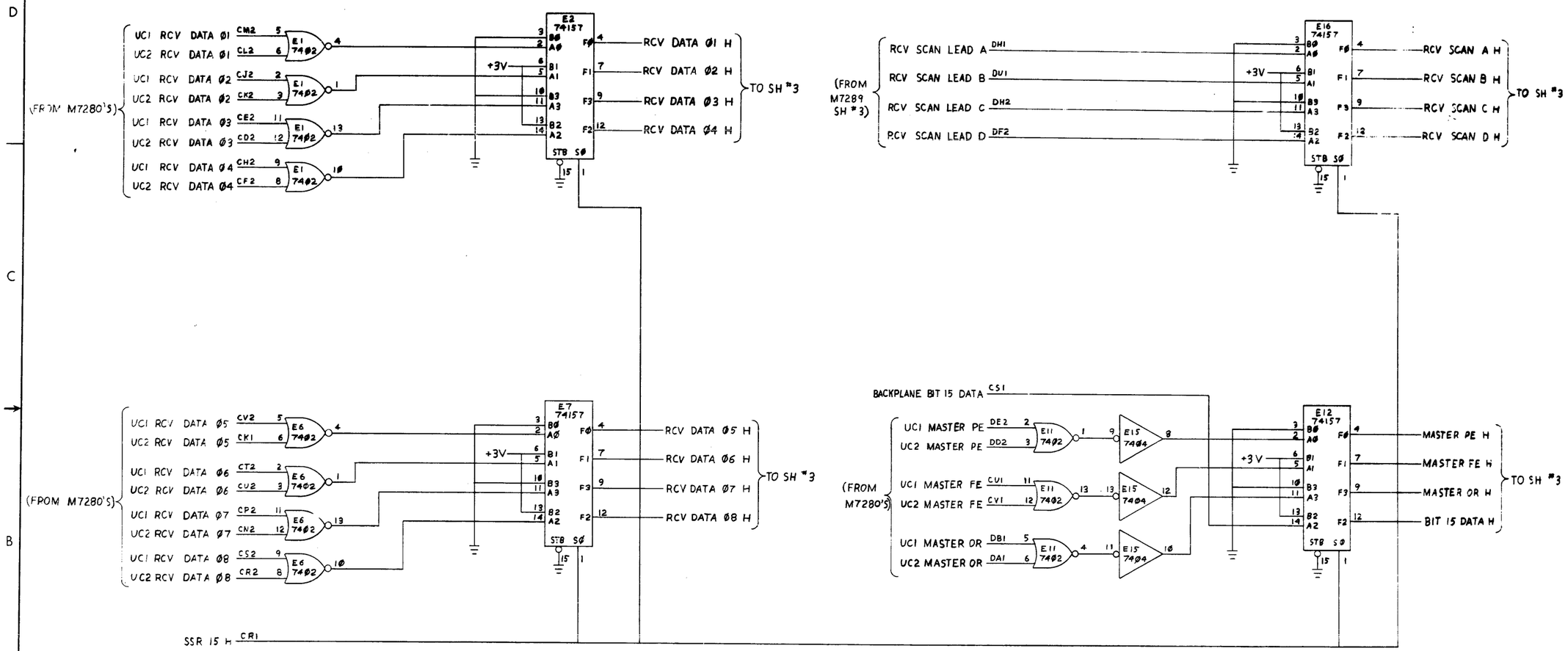

FIRST USED ON OPTION/MODEL	OTY.	DESCRIPTION	PART NO.	ITEM NO.
PDP11		PARTS LIST		

UNLESS OTHERWISE SPECIFIED DIMENSION IN INCHES
TOLERANCES
DECIMALS .XXX = .005 .XX = .02 X = .1
ANGLES ±0 30
REMOVE BURRS AND BREAK SHARP CORNERS SURFACE QUALITY 1

MATERIAL —/—
FINISH —/—

DRN. [illegible] DATE 7-9-73
CHK'D [illegible] DATE 7-23-73
ENG. [illegible] DATE 8-6-73
PROJ. ENG. [illegible] DATE 8-6-73
PROD. [illegible] DATE 8-6-73

NEXT HIGHER ASSY. B-DD-DH11-0
SCALE —/—
SHEET 1 OF 2

digital EQUIPMENT CORPORATION MAYNARD MASSACHUSETTS

TITLE FIFO BUFFER (M7279)

SIZE D CODE BS NUMBER DH11-Ø-15 REV.

DWG. DH11-Ø-15

—	DH11-00002	ORIGINATED

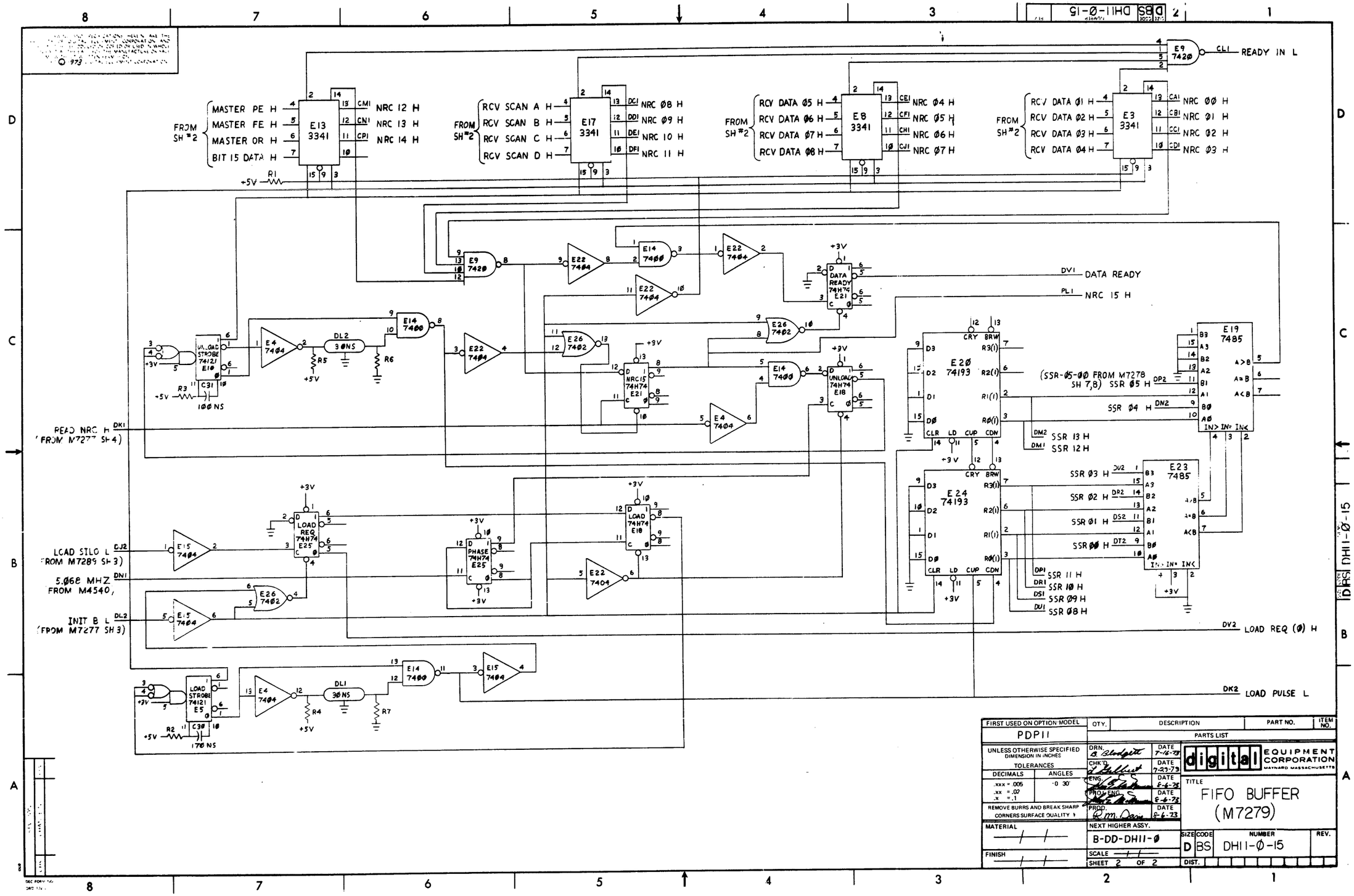

FIRST USED ON OPTION/MODEL	QTY.	DESCRIPTION	PART NO.	ITEM NO.
PDP11		PARTS LIST		

UNLESS OTHERWISE SPECIFIED DIMENSION IN INCHES
TOLERANCES
DECIMALS: .xxx = .005, .xx = .02, .x = .1
ANGLES: ±0 30'
REMOVE BURRS AND BREAK SHARP CORNERS SURFACE QUALITY

		DATE
DRN.	D. Blodgett	7-16-73
CHK'D		7-23-73
ENG.		8-6-73
PROJ. ENG.		8-6-73
PROD.	R. M. Dann	8-6-73

MATERIAL: —/—
FINISH: —/—
NEXT HIGHER ASSY.: B-DD-DH11-Ø
SCALE: —/—
SHEET 2 OF 2

digital EQUIPMENT CORPORATION MAYNARD MASSACHUSETTS

TITLE: FIFO BUFFER (M7279)

SIZE	CODE	NUMBER	REV.
D	BS	DH11-Ø-15	

DIST.

THIS DRAWING AND SPECIFICATIONS, HEREIN, ARE THE PROPERTY OF DIGITAL EQUIPMENT CORPORATION AND SHALL NOT BE REPRODUCED OR COPIED OR USED IN WHOLE OR IN PART AS THE BASIS FOR THE MANUFACTURE OR SALE OF ITEMS WITHOUT WRITTEN PERMISSION
COPYRIGHT © 1973 DIGITAL EQUIPMENT CORPORATION

WIRE LIST

ITEM NO	DESCRIPTION AWG	DESCRIPTION COLOR	FROM POINT	FROM CONNECTION	FROM WITH	TO POINT	TO CONNECTION	TO WITH	SIGNAL
5	14 TWP	RED	1	—	8,9	12	P2-4	3	+5V
		BLK	2	—	8,9	13	P2-7	3	GND
6	14 TWP	BLK	3	—	8,9	10	P2-9	3	GND
		BLU	4	—	8,9	11	P2-13	3	-15V
4	14	RED	5	—	8,9	14	P2-1	3	+5V
7	18 TWP	YEL	6	—	8,9	8	P1-4	3	AC LO
		VIO	7	—	8,9	9	P1-3	3	DC LO
11	18	GRY	8	—	8,9	15	P2-2	3	+15V

NOTES:

1. USE TIE WRAPS(X) ITEM 10 APPROXIMATELY EVERY THREE(3) INCHES WHEN NECESSARY, AND AT EVERY BREAK-OUT POINT.
2. ATTACH MALE FASTON DEC # 9008219-0 WITH WOOD SCREWS (8 PLACES).
3. USE CONN. BRKT C-MD-9305761-H15-0 MOUNT WITH WOOD SCREWS. USE MATING CONN. 1209350-15
4. USE CONN. BRKT C-MD-9305761-H6-0 MOUNT WITH WOOD SCREWS. USE MATING CONN. 1209350-06
5. DOT (•) INDICATES NAIL LOCATIONS FOR ASSEMBLY USE ONLY. COVER NAILS WITH SHRINK TUBING TO PREVENT CUTTING HARNESS.

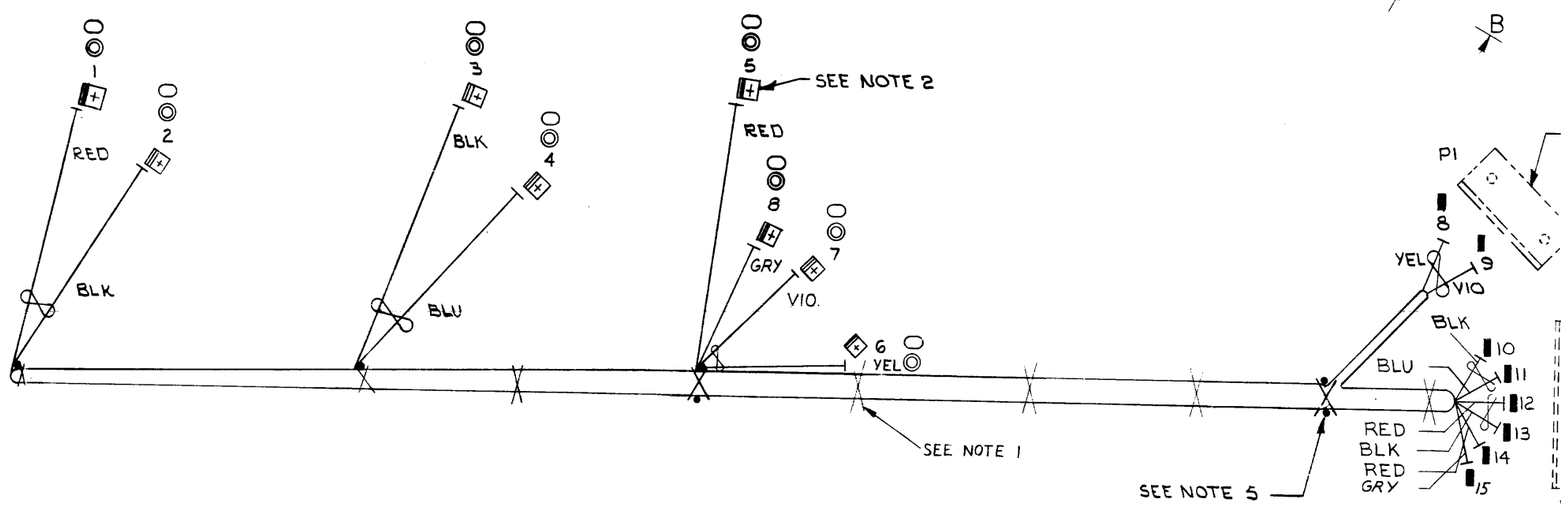

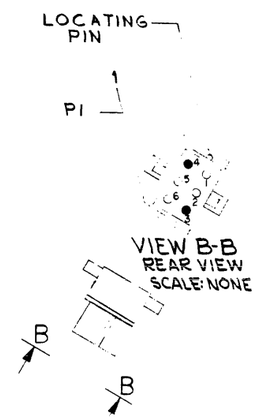

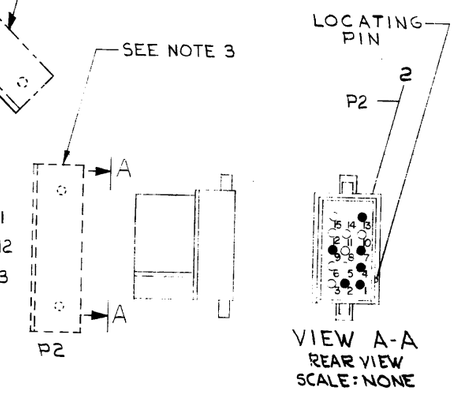

DO NOT REDUCE
SCALE
0 IN. 6 IN. 12 IN.
DO NOT BUILD FROM REDUCED PRINT

SYM	QTY.	DESCRIPTION	PART NO.	ITEM NO.
	A/R	WIRE #18 AWG STRD PVC GRY	9107360-88	11
X	A/R	WRAP, TIE	9007031	10
	A/R	TUBING, SHRINK	9107305-02	9
	8	CONN. SOLDERLESS	9009262-0	8
	A/R	WIRE, #18 TWP YEL/VIO	9107430-47	7
	A/R	WIRE, #14 TWP BLK/BLU	9107440-06	6
	A/R	WIRE, #14 TWP BLK/RED	9107440-02	5
	A/R	WIRE, #14 AWG RED	9107370-22	4
	8	PIN, MALE	1209378-00	3
	1	HOUSING, CONN. 15 PIN	1209351-15	2
	1	HOUSING, CONN. 6 PIN	1209351-06	1

PARTS LIST

REV	CHANGE NO	CHK	
A	7009561-00001		J. Mc Namara 9-7-74
B	DH11-00015		V. BOAEN
C	7009561-00002		H. KWAN 15 OCT. 76

FIRST USED ON OPTION/MODEL

UNLESS OTHERWISE SPECIFIED DIMENSION IN INCHES
TOLERANCES
DECIMALS: xxx = .005, .xx = .02, .x = .1
ANGLES: ±0° 30'
REMOVE BURRS AND BREAK SHARP CORNERS SURFACE QUALITY 1

MATERIAL: SEE PARTS LIST
FINISH: — / —

DRN. DATE 3/29/73
CHK. DATE 4/29/73
ENG. DATE 11/20/73
PROJ. ENG. DATE 11/20/73
PROD. DATE 10/30/73

NEXT HIGHER ASSY.
SCALE 1/1
SHEET 1 OF 1

digital EQUIPMENT CORPORATION MAYNARD MASSACHUSETTS

TITLE: OPTION HARNESS DH11

SIZE	CODE	NUMBER	REV.
D	IA	7009561-0-0	C

DIST.

DEC FORM 40 DATE 10/68

THIS DRAWING AND SPECIFICATIONS, HEREIN, ARE THE PROPERTY OF DIGITAL EQUIPMENT CORPORATION AND SHALL NOT BE REPRODUCED OR COPIED OR USED IN WHOLE OR IN PART AS THE BASIS FOR THE MANUFACTURE OR SALE OF ITEMS WITHOUT WRITTEN PERMISSION
COPYRIGHT © 1974 DIGITAL EQUIPMENT CORPORATION

NOTES:

1. FOR −15V TO −10V AND +15V TO +10V SEE SHEET 7 OF 7
2. THE SIGNALS "SEC TX" AND "SEC RX" REFER TO ASYNCHRONOUS OPERATION ONLY. WHEN THE MODULE IS USED IN A SYNCHRONOUS APPLICATION THE SIGNALS MAY BE USED AS "NEW SYNC" AND "DATA SET RDY" FOR THAT LINE.

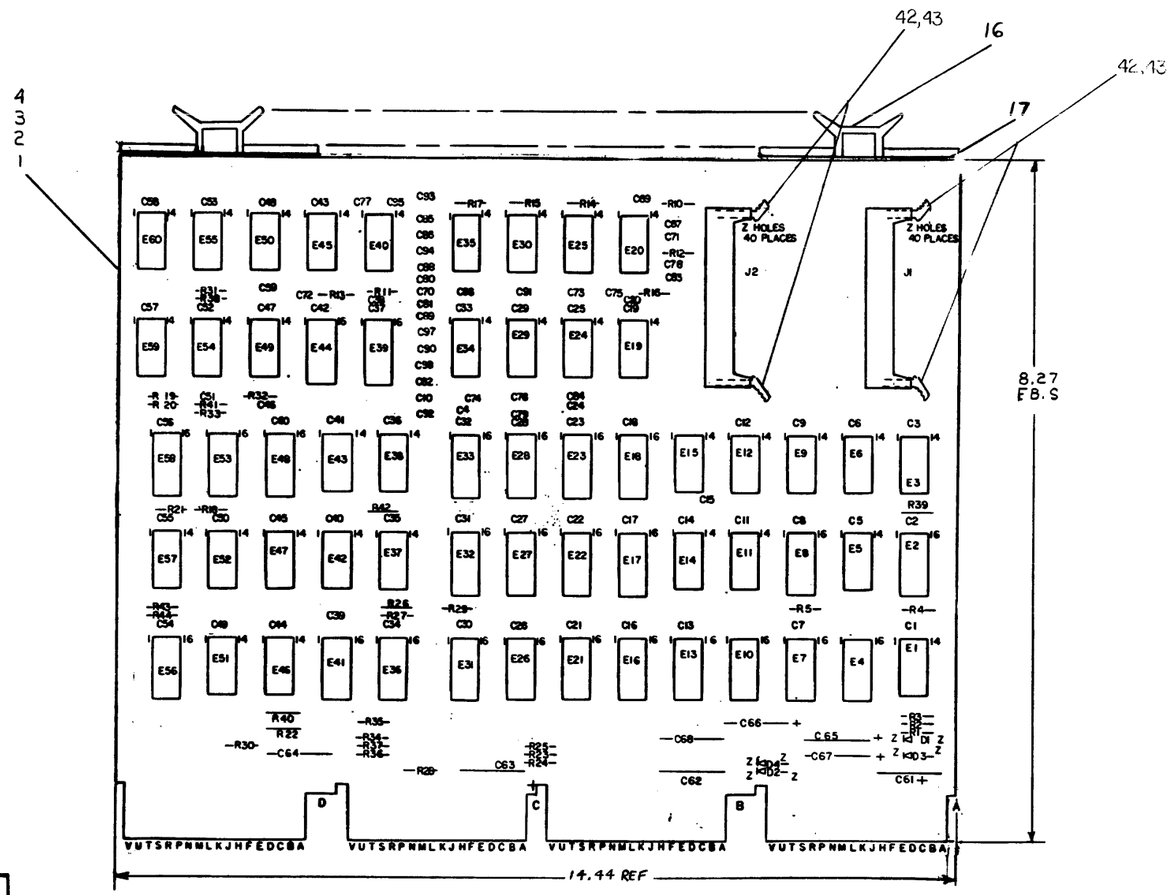

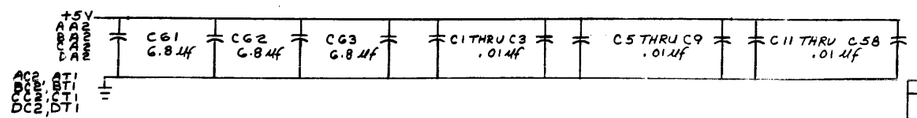

DEC 4015	8	16
DEC 8271	8	16
DEC 7489	8	16
DEC 8640	1	8
DEC 8266	8	16
DEC 74123	8	16
DEC 7442	8	16
DEC 74175	8	16
DEC 74151	8	16
IC TYPE	GND	+5V

GND AND 5V ARE USUALLY PIN 7 AND 14 RESPECTIVELY EXCEPTIONS ARE STATED ABOVE

IC PIN LOCATIONS

QTY	REF DESIGNATION	DESCRIPTION	PART NO.	ITEM NO.
REF		X-Y COORDINATE HOLE LOCATION	K-CO-M7808-Ø-4	1
REF		ASSY/DRILL HOLE LAYOUT	D-AH-M7808-Ø-5	2
REF		MODULE ECO HISTORY	B-MH-M7808-Ø-6	3
1		ETCHED CIRCUIT BOARD	5010884	4
56	C1-3,5-9,11-58	CAP .01 UF, 100V, ± 20%	1001610-00	5
33	C4,10,59,69-98	CAP 470 PF, 100V, ± 5%	1000024	6
1	C60	CAP 82 PF, 100V, ± 5%	1000015	7
8	C61 THRU C68	CAP 6.8 UF, 35V, ± 10%	1005306	8
4	D1,2,3,4	DIODE IN4733A ZENER	1109943	9
2	J1,J2	CONNECTOR 40 PIN	1209941	10
28	R1-4,18-30,32-38,40-43	RES. 750 1/4W 5%	1301401	11
1	R31	RES. 220 1/4W 5%	1300271	12
8	R10-17	RES. 33K 1/4W 10%	1300510	13
~~4~~	~~R5,7,8,9~~	~~RES. 330 1/2W 5%~~	~~1300296~~	~~14~~
1	R44	RES. 330 1/4W 5%	1300295	15
4		HANDLE FLIP CHIP	9008337-08	16
8		EYELET	9006732	17
1	E50	I.C. DEC 7474	1905547	18
8	E19,20,24,25,29,30,34,35	I.C. DEC 1489L	1910323	19
8	E17,18,22,23,27,28,32,33	I.C. DEC 74151	1909936	20
8	E4,7,10,13,16,21,26,31	I.C. DEC 74175	1910651	21
6	E5,6,9,11,12,15	I.C. DEC 1488	1910322	22
2	E14,49	I.C. DEC 7410	1905576	23
1	E2	I.C. DEC 7442	1910046	24
2	E1,42	I.C. DEC 7417	1909929	25
1	E8	I.C. DEC 74123	1910436	26
4	E3,38,54,60	I.C. DEC 8881	1909705	27
2	E36,53	I.C. DEC 8266	1909934	28
2	E41,44	I.C. DEC 8838	1911117	29
1	E46	I.C. DEC 8640	1911469	30
1	E51	I.C. DEC 7416	1909928	31
1	E56	I.C. DEC 7489	1910396	32
1	E37	I.C. DEC 74197	1910035	33
2	E45,47	I.C. DEC 7400	1905575	34
1	E52	I.C. DEC 7408	1910155	35
2	E55,57	I.C. DEC 8815	1909713	36
2	E40,43	I.C. DEC 7404	1909686	37
1	E48	I.C. DEC 8271	1909615	38
2	E39,58	I.C. DEC 4015	1910087	39
1	E59	I.C. DEC 7486	1910011	40
2	R5,39	RES. 10K,1/4W,5%	[illegible]	[illegible]
2		LEFT LATCH	1209941-[illegible]	[illegible]
2		RIGHT LATCH	1209941-04	[illegible]
A/R		WIRE 30 AWG	9105740-55	44

PARTS LIST

ETCH BOARD REV D

DEC NO.	EIA NO.	DEC NO.	EIA NO.

SEMICONDUCTOR CONVERSION CHART

FIRST USED ON OPTION MODEL

REV	CHANGE NO.	CHK	ORIGINATED
J	M7808-00005	BC	R. HARRINGTON 9 JAN 78
H	M7808-00004		J. MCNAMARA 24 JAN 78
F	M7808-00003		J. McNAMARA 6-7-76
E	M7808-00002		J. McINTYRE 4-29-76
D	M7808-00001		W. PANAZICK 1-31-75
C	ORIGINATED		

REVISIONS

DRN. G. Wilson DATE 7/15/74
CHK'D. DATE
ENG. DATE
PROJ. ENG. DATE
PROD. DATE 8-30-74
NEXT HIGHER ASSY
SCALE NONE
SHEET 1 OF 7

digital EQUIPMENT CORPORATION MAYNARD, MASSACHUSETTS

TITLE MODEM CONTROL

SIZE D CODE DC NUMBER M7808-Ø-1 REV. J

DIST.

"THIS DRAWING AND SPECIFICATIONS, HEREIN, ARE THE PROPERTY OF DIGITAL EQUIPMENT CORPORATION AND SHALL NOT BE REPRODUCED OR COPIED OR USED IN WHOLE OR IN PART AS THE BASIS FOR THE MANUFACTURE OR SALE OF ITEMS WITHOUT WRITTEN PERMISSION. COPYRIGHT © 1974 DIGITAL EQUIPMENT CORPORATION"

NOTE:

* REMOVE WIRE TO INHIBIT INTERUPTS FROM TRANSITIONS.

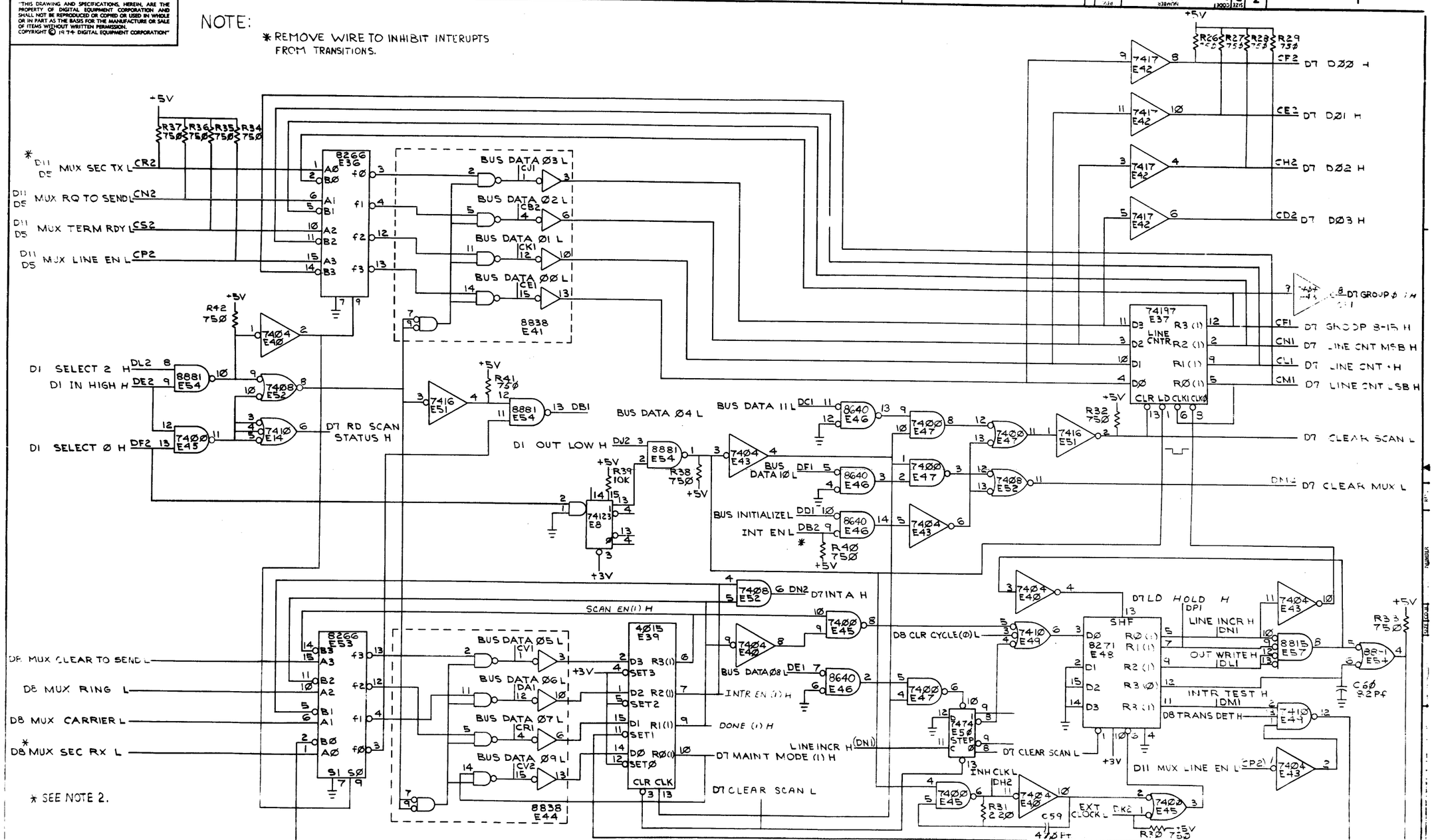

REVISIONS		
CHK	CHANGE NO.	REV.

TITLE	SIZE	CODE	NUMBER	REV.
MODEM CONTROL (D7)	D	CS	M7808-0-1	J
SCALE —	SHEET 2 OF 7	DIST.		

DEC FORM NO.

"THIS DRAWING AND SPECIFICATIONS, HEREIN, ARE THE PROPERTY OF DIGITAL EQUIPMENT CORPORATION AND SHALL NOT BE REPRODUCED OR COPIED OR USED IN WHOLE OR IN PART AS THE BASIS FOR THE MANUFACTURE OR SALE OF ITEMS WITHOUT WRITTEN PERMISSION. COPYRIGHT © 19" " DIGITAL EQUIPMENT CORPORATION"

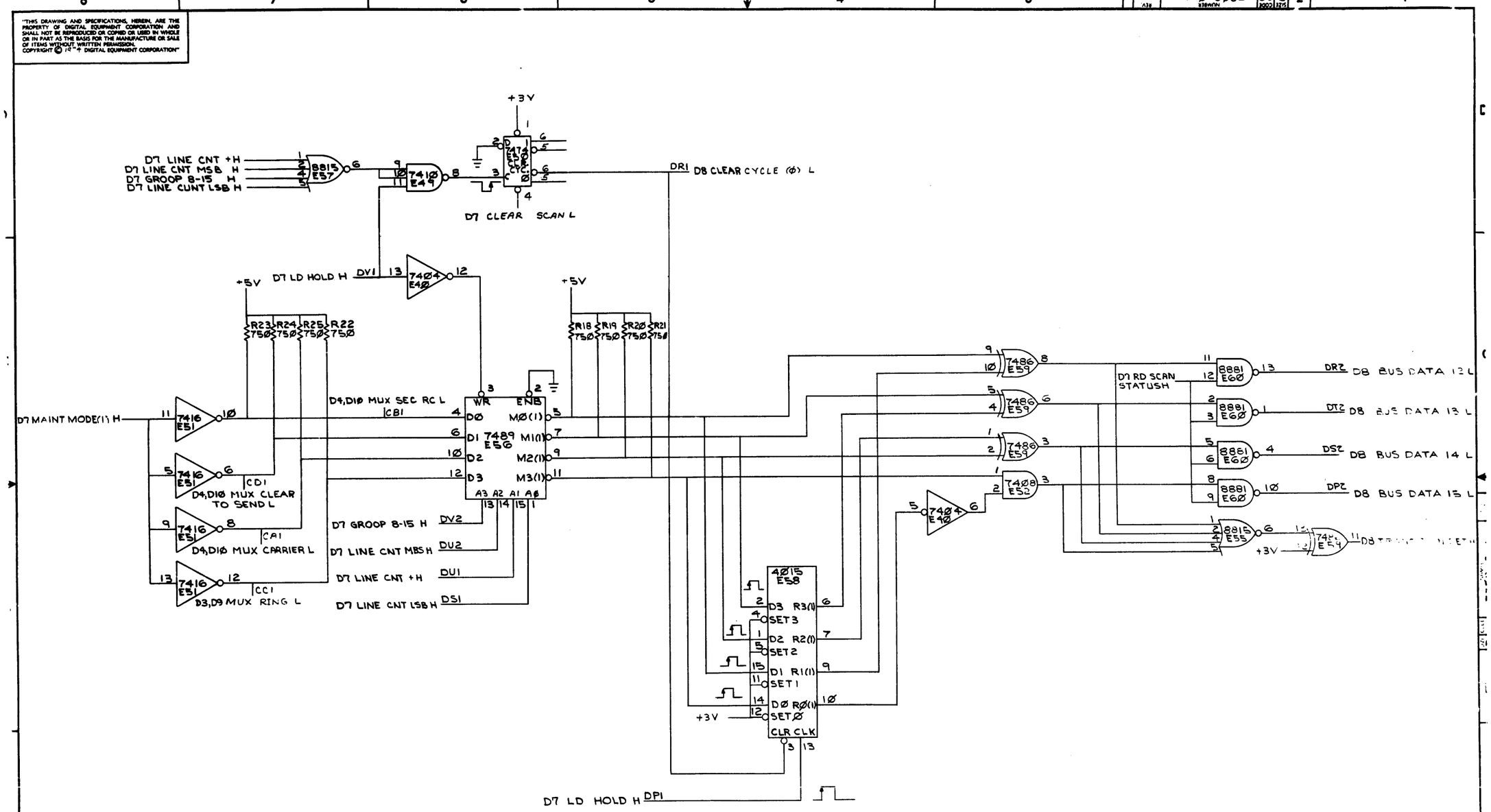

REVISIONS		
CHK	CHANGE NO.	REV.

TITLE	SIZE	CODE	NUMBER	REV.
MODEM CONTROL (D8)	D	CS	M78Ø8-Ø-1	
SCALE — SHEET 3 OF 7	DIST.			

"THIS DRAWING AND SPECIFICATIONS, HEREIN, ARE THE PROPERTY OF DIGITAL EQUIPMENT CORPORATION AND SHALL NOT BE REPRODUCED OR COPIED OR USED IN WHOLE OR IN PART AS THE BASIS FOR THE MANUFACTURE OR SALE OF ITEMS WITHOUT WRITTEN PERMISSION. COPYRIGHT © 1979, DIGITAL EQUIPMENT CORPORATION"

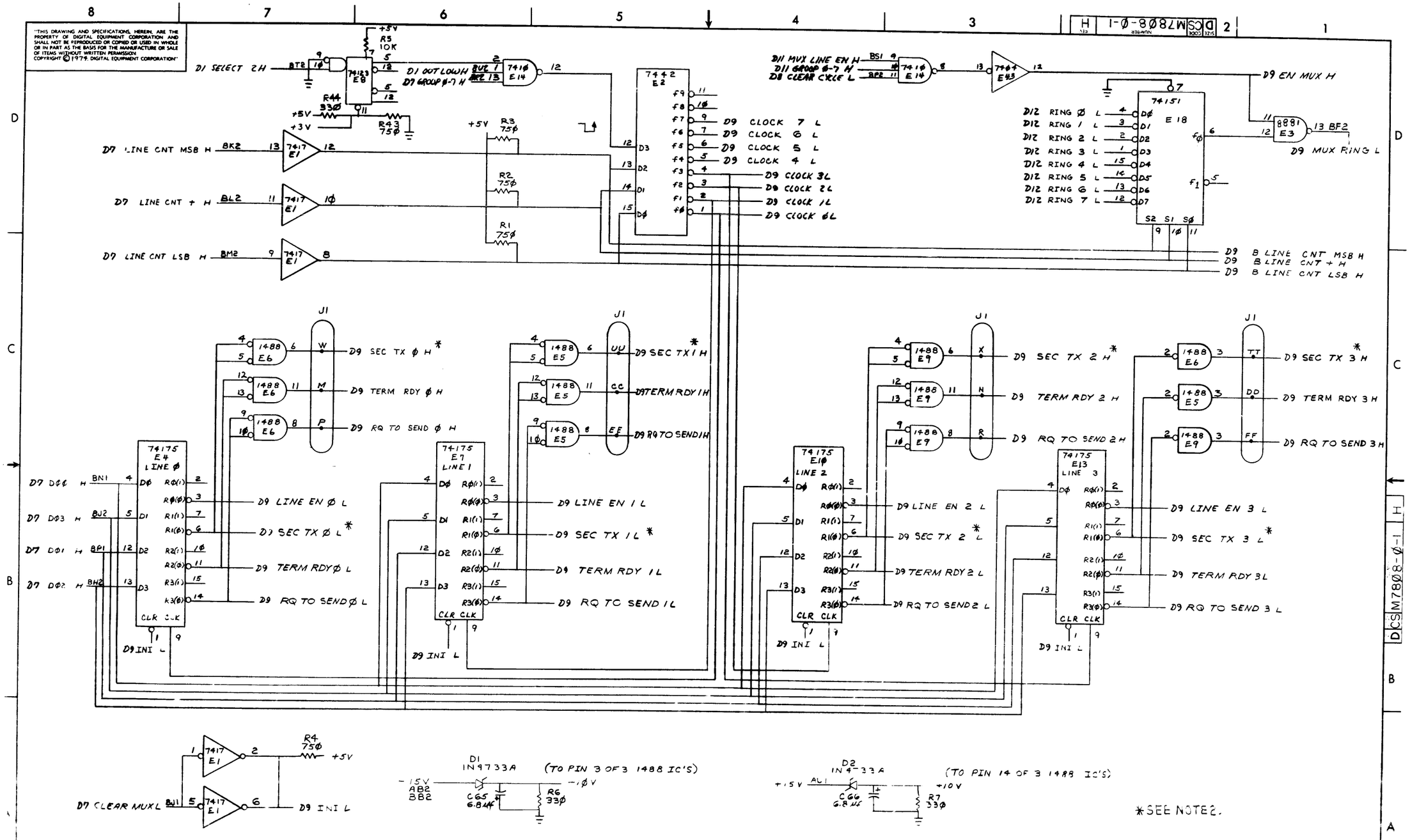

REVISIONS		
CHK	CHANGE NO	REV

TITLE	SIZE	CODE	NUMBER	REV.
MODEM CONTROL (09)	D	CS	M7808-Ø-1	H
SCALE	SHEET 4 OF 7	DIST.		

"THIS DRAWING AND SPECIFICATIONS, HEREIN, ARE THE PROPERTY OF DIGITAL EQUIPMENT CORPORATION AND SHALL NOT BE REPRODUCED OR COPIED OR USED IN WHOLE OR IN PART AS THE BASIS FOR THE MANUFACTURE OR SALE OF ITEMS WITHOUT WRITTEN PERMISSION. COPYRIGHT © 1979, DIGITAL EQUIPMENT CORPORATION"

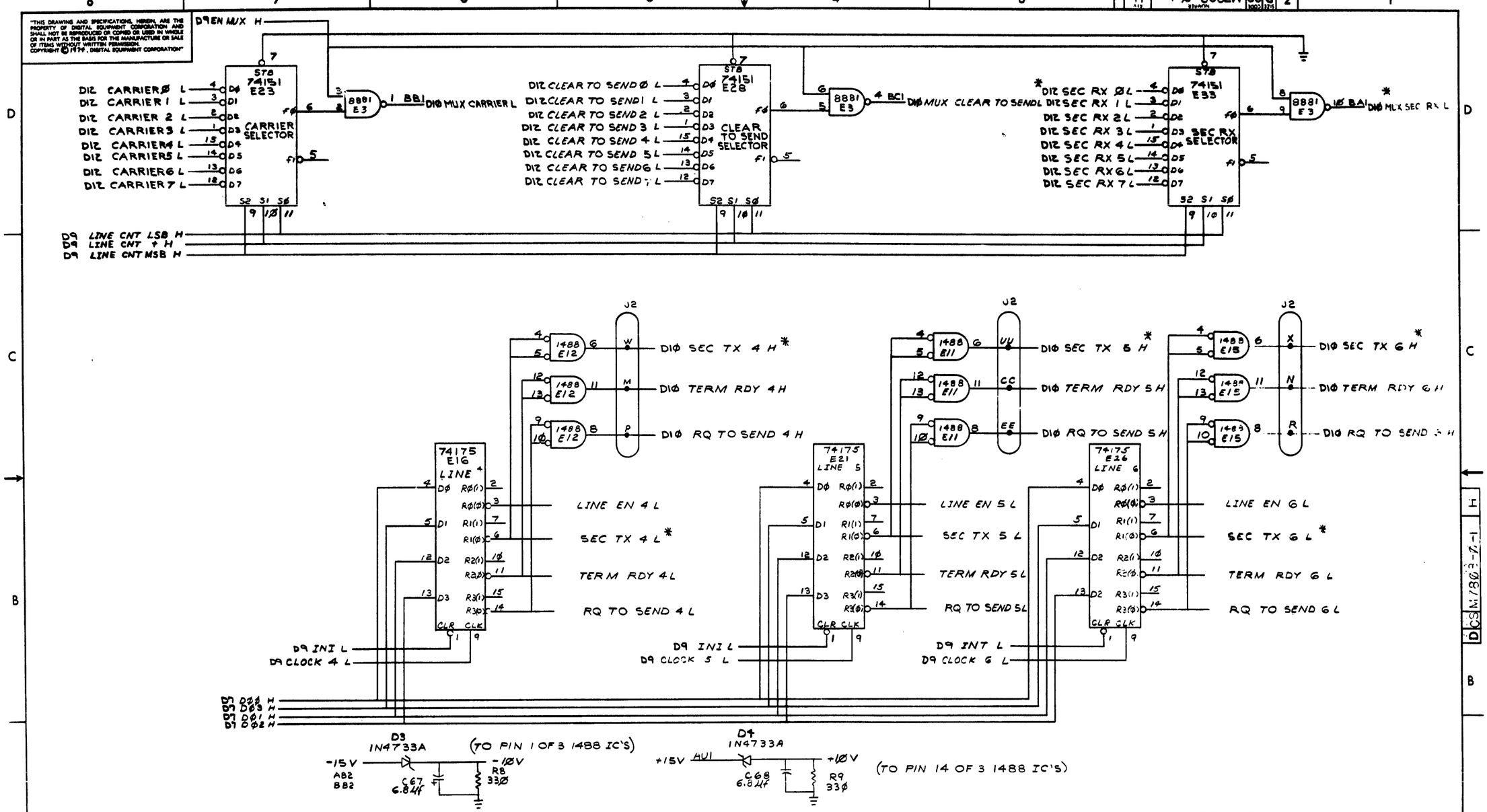

REVISIONS		
CHK	CHANGE NO.	REV

(MUX)

TITLE MODEM CONTROL (DIØ)

SIZE D CODE CS NUMBER M7808-Ø-1 REV. H

SCALE — SHEET 5 OF 7 DIST.

DCS M7808-Ø-1

THIS DRAWING AND SPECIFICATIONS, HEREIN, ARE THE PROPERTY OF DIGITAL EQUIPMENT CORPORATION AND SHALL NOT BE REPRODUCED OR COPIED OR USED IN WHOLE OR IN PART AS THE BASIS FOR THE MANUFACTURE OR SALE OF ITEMS WITHOUT WRITTEN PERMISSION.
COPYRIGHT © 1979 DIGITAL EQUIPMENT CORPORATION

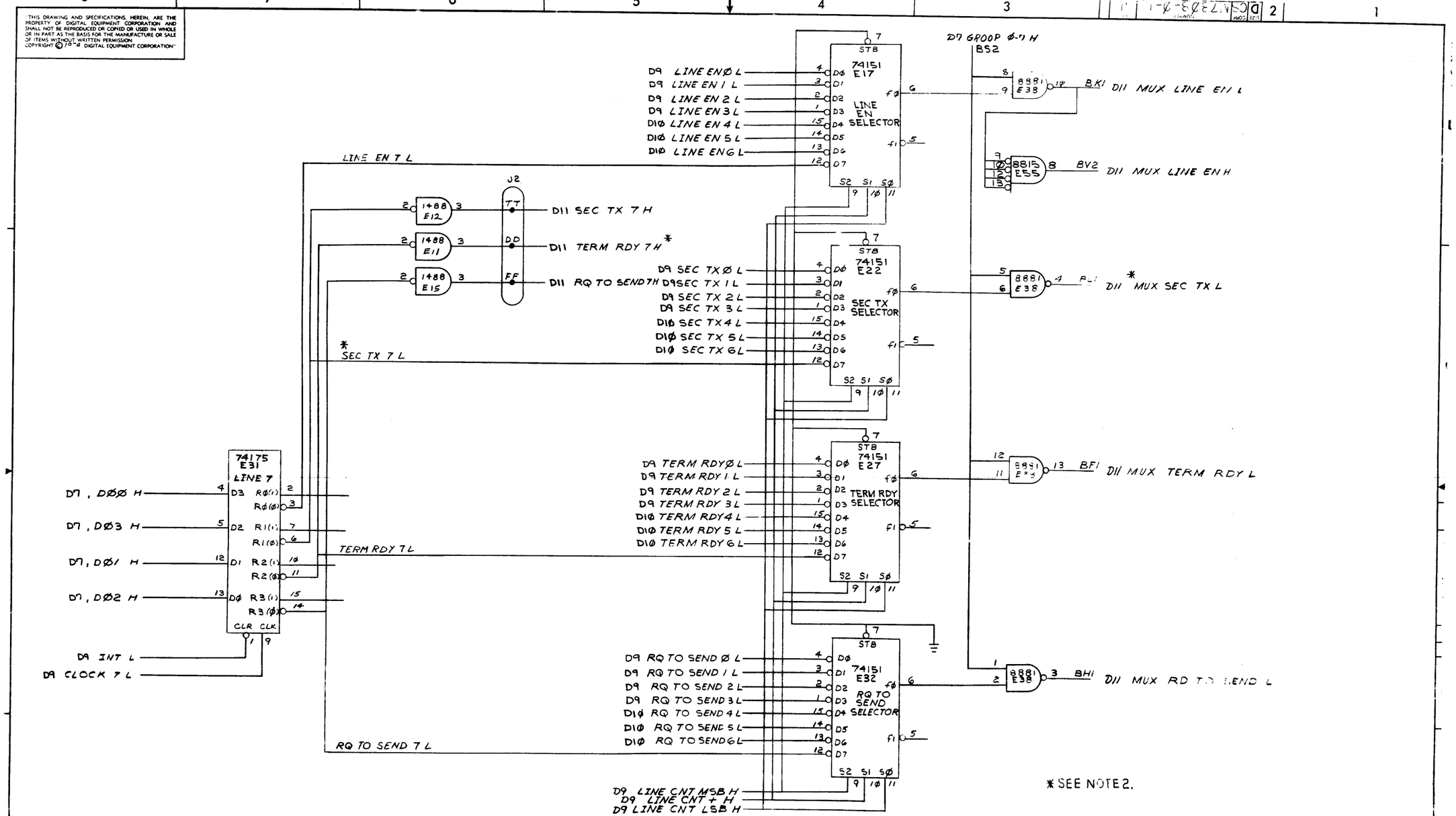

REVISIONS		
CHK	CHANGE NO	REV.

TITLE: MCI FM CONTROL (D11)
SIZE: D | CODE: CS | NUMBER: M-FCB-C- | REV. J
SCALE | SHEET 6 OF 7 | DIST.

THIS DRAWING AND SPECIFICATIONS, HEREIN, ARE THE PROPERTY OF DIGITAL EQUIPMENT CORPORATION AND SHALL NOT BE REPRODUCED OR COPIED OR USED IN WHOLE OR IN PART AS THE BASIS FOR THE MANUFACTURE OR SALE OF ITEMS WITHOUT WRITTEN PERMISSION
COPYRIGHT © 1974 DIGITAL EQUIPMENT CORPORATION

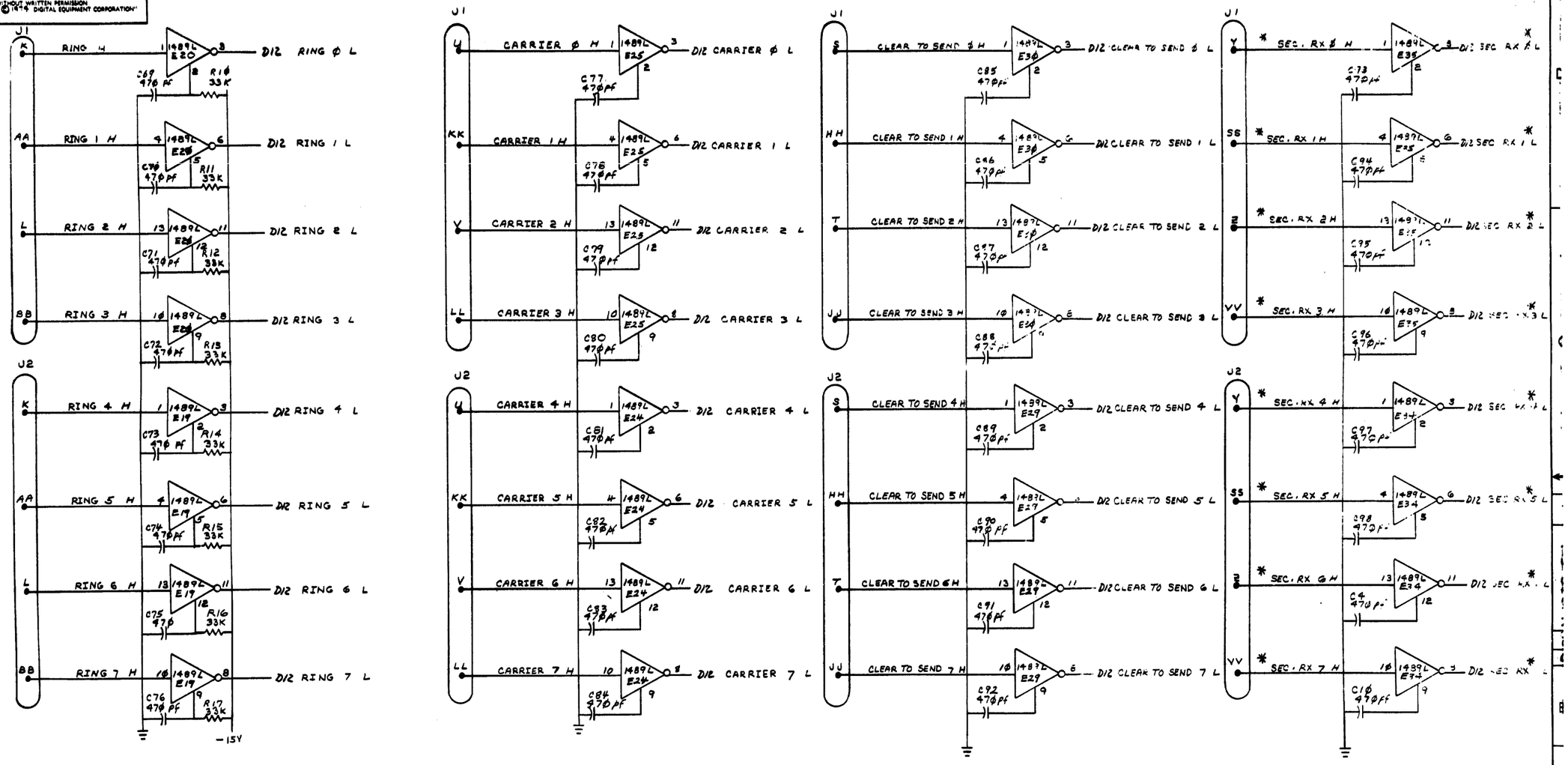

* SEE NOTE 2

REVISIONS		
CHK	CHANGE NO	REV.

(EIA LEVEL CONVERTERS)

TITLE MODEM CONTROL (D12)

SIZE D CODE CS NUMBER M7808-0-1 REV.

SCALE SHEET 7 OF 7 DIST.

THIS DRAWING AND SPECIFICATIONS, HEREIN, ARE THE PROPERTY OF DIGITAL EQUIPMENT CORPORATION AND SHALL NOT BE REPRODUCED OR COPIED OR USED IN WHOLE OR IN PART AS THE BASIS FOR THE MANUFACTURE OR SALE OF ITEMS WITHOUT WRITTEN PERMISSION.
COPYRIGHT © 1974 DIGITAL EQUIPMENT CORPORATION

NOTES:

1. ALL UNUSED PINS ON J1, J2 GO TO GND
2. THE SIGNALS "SEC TX" AND "SEC RX" REFER TO ASYNCHRONOUS OPERATION ONLY. WHEN THE MODULE IS USED IN A SYNCHRONOUS APPLICATION THE SIGNALS MAY BE USED AS "NEW SYNC" AND "DATA SET RDY" FOR THAT LINE.

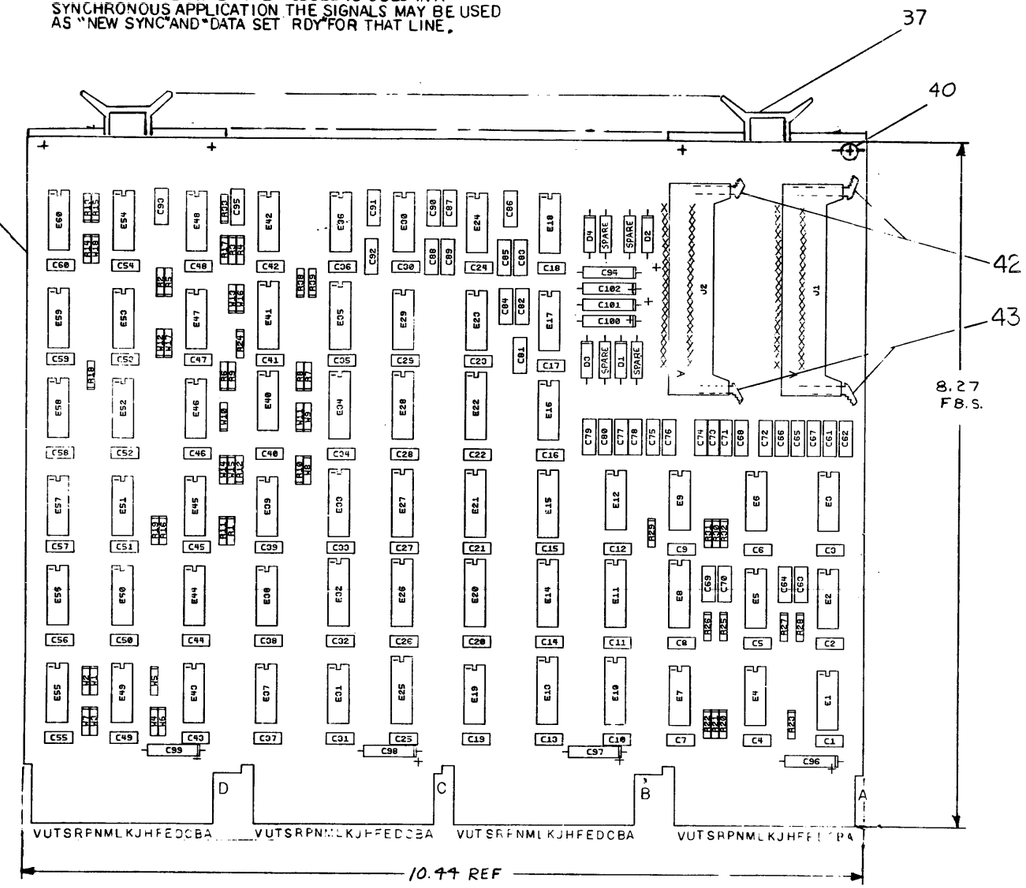

JUMPER TABLE		
JUMPER	BIT	
W1	DØ8	JUMPER REMOVED: INTERRUPT VECTOR = Ø
W2	DØ2	
W3	DØ3	
W4	DØ6	
W5	DØ7	
W6	DØ5	
W7	DØ4	
W8	A12	JUMPER REMOVED: DEVICE SELECT = 1
W9	AØ9	
W10	AØ8	
W11	AØ1	
W12	AØ4	
W13	AØ5	
W14	A11	
W15	AØ3	
W16	AØ6	
W17	AØ7	

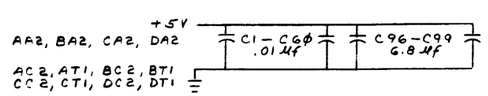

DEC 8640	1	8
DEC IC 7442	8	16
DEC IC 74175	8	16
DEC IC 74151	8	16
IC TYPE	GND	+ 5V

GND AND 5V ARE USUALLY PIN 7 AND 14 RESPECTIVELY EXCEPTIONS ARE STATED ABOVE

IC PIN LOCATIONS

QTY	REF DESIGNATION	DESCRIPTION	PART NO.	ITEM NO.
REF		X-Y COORDINATE HOLE LOCATION	K-CO-M7807-Ø-4	1
REF		ASSY/DRILLING HOLE LAYOUT	D-AH-M7807-Ø-5	2
REF		MODULE ECO HISTORY	B-WH-M7807-Ø-6	3
1		ETCHED CIRCUIT BOARD	5010083	4
8	C94, C96—C102	CAP 6.8 UF 35V 10%	1005306	5
60	C1-C60	CAP .01 UF 100V 20%	1001610-0[illegible]	6
33	C61—C93	CAP 470 UMF 100V 5%	1000024	7
1	C95	CAP 330 PF 100V 5%	1000023	8
4	D1, D2 D3, D4	DIODE IN4733A	1109943	9
16	R1-R13, R15, R17, R18	RES 1K 1/4W 5%	1300365	10
1	R14	RES 100 1/4W 5%	1300229	11
1	R33	RES 47 1/4W 5%	1300202	12
1	R19	RES 180 1/4W 5%	1301322	13
5	R20-R23, R39	RES 750 1/4W 5%	1301401	14
8	R25-R32	RES 33K 1/4W 10%	1300510	15
1	R16	RES 390 1/4W 5%	1300303	16
~~4~~	~~R34, R35, R36, R37~~	~~RES 330 1/4W 5%~~	~~1300229~~	~~17~~
1	E52	I.C. DEC 7408	1910155	18
1	E4	I.C. DEC 7417	1909929	19
6	E13, E18, E23, E29, E36, E42	I.C. DEC 1488L	1910322	20
8	E3, 5, 6, 9, 12, 17, 24, 30	I.C. DEC 1489L	1910323	21
8	E8, 11, 14, 15, 20, 21, 22, 28	I.C. DEC 74151	1909936	22
8	E10, 13, 25, 28, 32, 33, 34, 35	I.C. DEC 74175	1910651	23
1	E19	I.C. DEC 7410	1905576	24
1	E27	I.C. DEC 7442	1910048	25
6	E1, E7, E49, E51, E55, E60	I.C. DEC 8881	1909705	26
2	E56, E59	I.C. DEC 7400	1905575	27
7	E31, E37, E43, E45, E46 E53, E54	I.C. DEC 8640	1911469	28
1	E58	I.C. DEC 7474	1905547	29
1	E2	I.C. DEC 74H04	1909931	30
1	E44	I.C. DEC 74H00	1909056	31
3	E39, E40, E47	I.C. DEC 8242	1909712	32
1	E41	I.C. DEC 74123	1910436	33
1	E48	I.C. DEC 74H74	1909687	34
1	E38	I.C. DEC 8815	1909713	35
2	E50 E57	I.C. DEC 7402	1909004	36
4		HANDLE FLIP CHIP	9008337-8	37
2	J1, J2	40 PIN HEADER	1209841	38
18	W1-W18	JUMPER (INSULATED)	9009106	39
6		EYELET HANDLE	9006732	40
1	R38	RES 330 1/4W 5%	1300295	41
2		LEFT LATCH	1209941-03	42
2		RIGHT LATCH	1209941-04	43
1	R24	RES. 10K, 1/4W, 5%	1300479	44

PARTS LIST

ETCH BOARD REV D

FIRST USED ON OPTION MODEL

DEC NO.	EIA NO.	DEC NO.	EIA NO.

SEMICONDUCTOR CONVERSION CHART

REV	CHANGE NO	REVISIONS
H	M7807-00004	R. HARRINGTON 11JAN78
G	M7807-00003	
F	M7807-00002	J. McNAMARA 6-4-76
E	M7807-00001	J. McINTYRE 4-2-74
D		W. FANUCCI 12-3-72
C		ORIGINATED

DRN. 11/29/74
CHKD. 12/4/74
ENG. 12-30-74
PROJ. ENG. 12-30-74
PROJ. 12-30-74
NEXT HIGHER ASSY
SCALE
SHEET 1 OF 7

digital EQUIPMENT CORPORATION MAYNARD MASSACHUSETTS

TITLE BUS CONTROL MUX

SIZE D CODE CS NUMBER M7807-Ø-1 REV. H

DIST.

THIS DRAWING AND SPECIFICATIONS, HEREIN, ARE THE PROPERTY OF DIGITAL EQUIPMENT CORPORATION AND SHALL NOT BE REPRODUCED OR COPIED OR USED IN WHOLE OR IN PART AS THE BASIS FOR THE MANUFACTURE OR SALE OF ITEMS WITHOUT WRITTEN PERMISSION
COPYRIGHT © 1971 DIGITAL EQUIPMENT CORPORATION

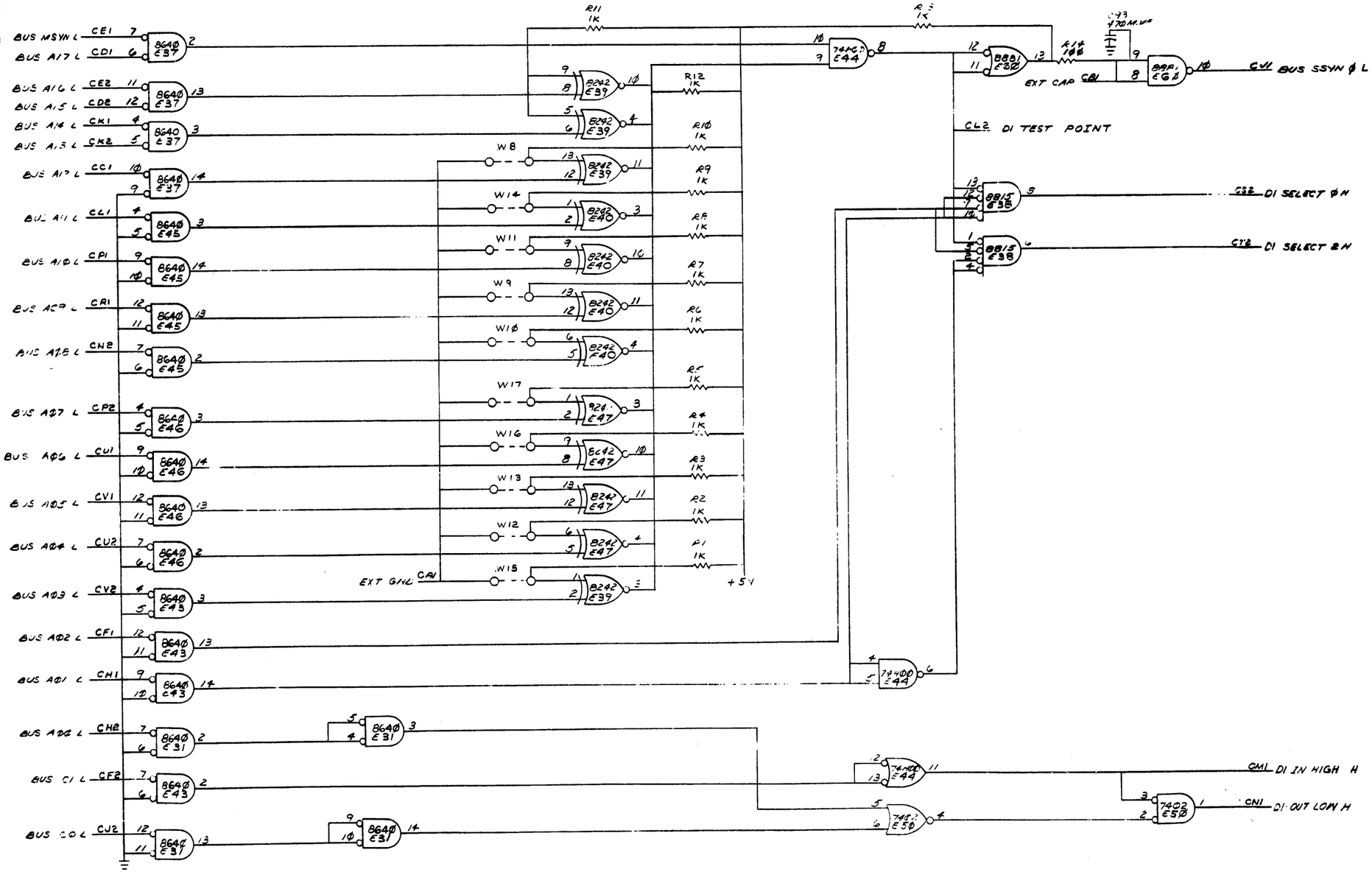

REVISIONS		
CHK	CHANGE NO	REV

TITLE	SIZE	CODE	NUMBER	REV.
BUS CONTROL & MUX (01)	D	CS	M7807-0-1	H
SCALE —	SHEET 2 OF 2	DIST.		

THIS DRAWING AND SPECIFICATIONS, HEREIN, ARE THE PROPERTY OF DIGITAL EQUIPMENT CORPORATION AND SHALL NOT BE REPRODUCED OR COPIED OR USED IN WHOLE OR IN PART AS THE BASIS FOR THE MANUFACTURE OR SALE OF ITEMS WITHOUT WRITTEN PERMISSION.
COPYRIGHT © 1974 DIGITAL EQUIPMENT CORPORATION

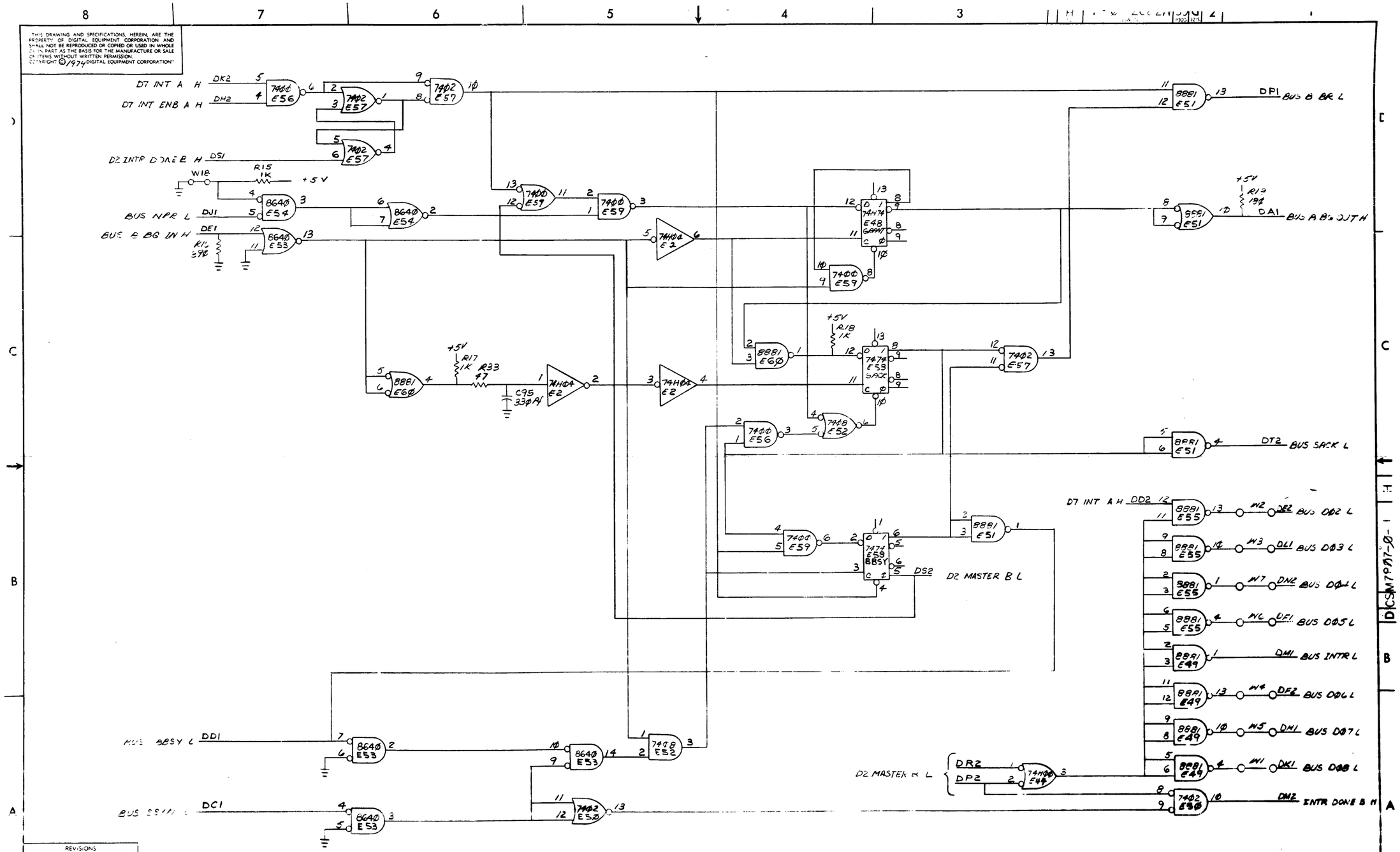

REVISIONS		
CHK	CHANGE NO	REV

TITLE BUS CONTROL & MUX (D2)

SIZE D CODE CS NUMBER M7807-0-1 REV. H

SCALE — SHEET 3 OF 7 DIST.

THIS DRAWING AND SPECIFICATIONS, HEREIN, ARE THE PROPERTY OF DIGITAL EQUIPMENT CORPORATION AND SHALL NOT BE REPRODUCED OR COPIED OR USED IN WHOLE OR IN PART AS THE BASIS FOR THE MANUFACTURE OR SALE OF ITEMS WITHOUT WRITTEN PERMISSION. COPYRIGHT © 1973 BY DIGITAL EQUIPMENT CORPORATION

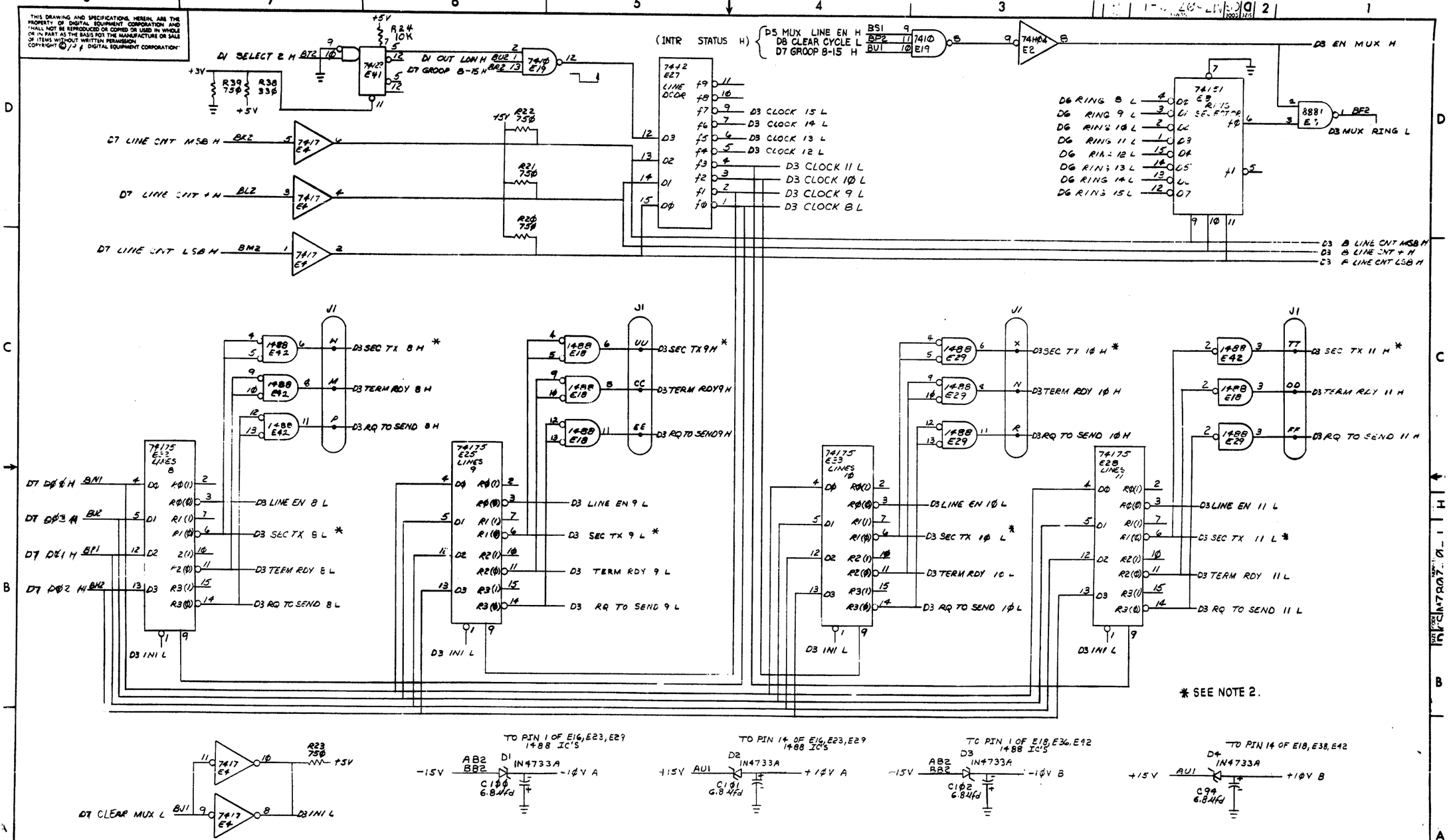

REVISIONS		
CHK	CHANGE NO.	REV.

TITLE BUS CONTROL & MUX (D3)

SCALE — SHEET 4 OF 7

SIZE D CODE CS NUMBER M7807-0-1 REV. H

DIST.

DEC FORM NO DRD 138

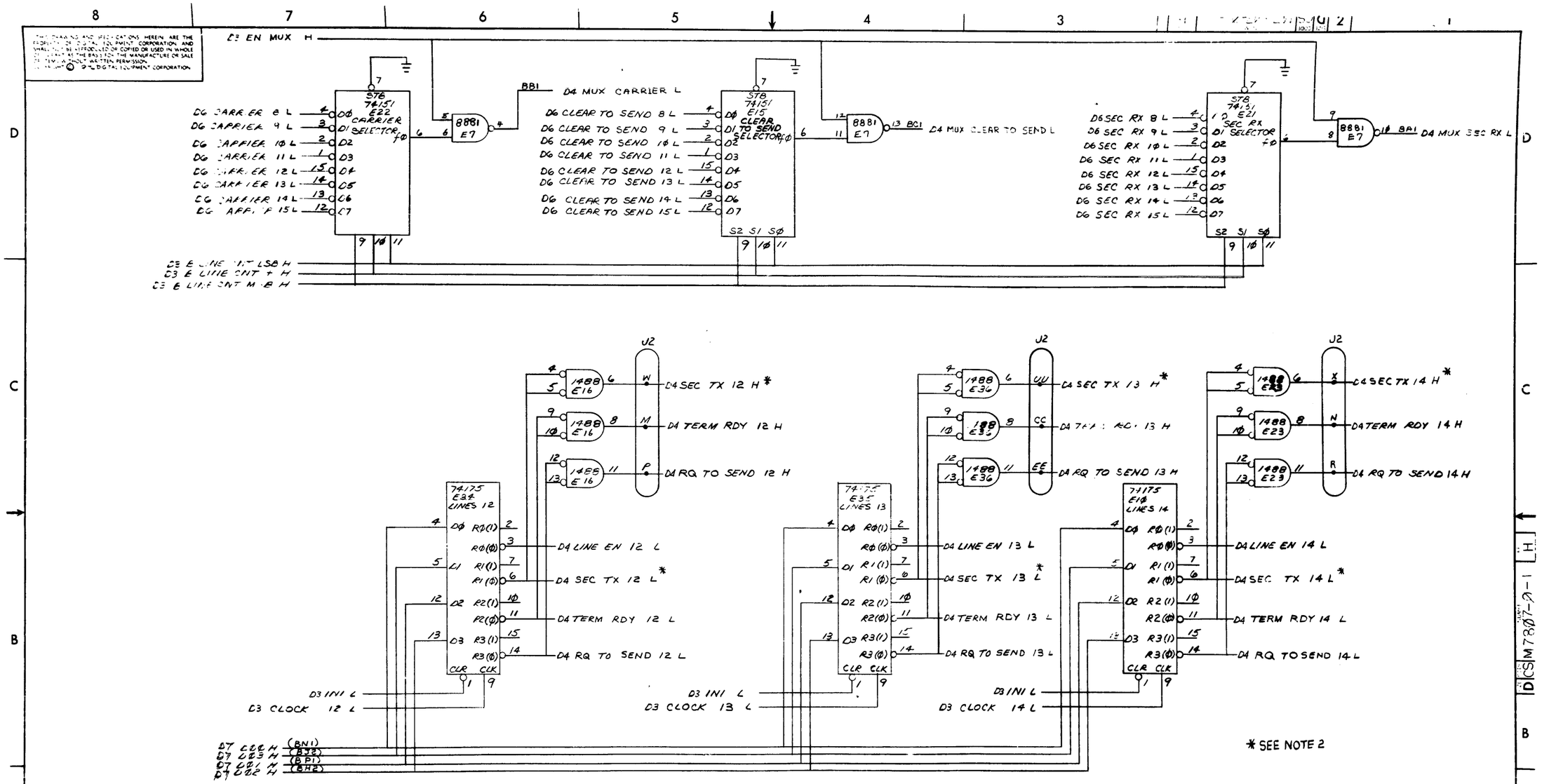

TITLE	SIZE	CODE	NUMBER	REV.
BUS CONTROL & MUX (D4)	D	CS	M7807-0-1	H
SCALE —	SHEET 5 OF 7	DIST.		

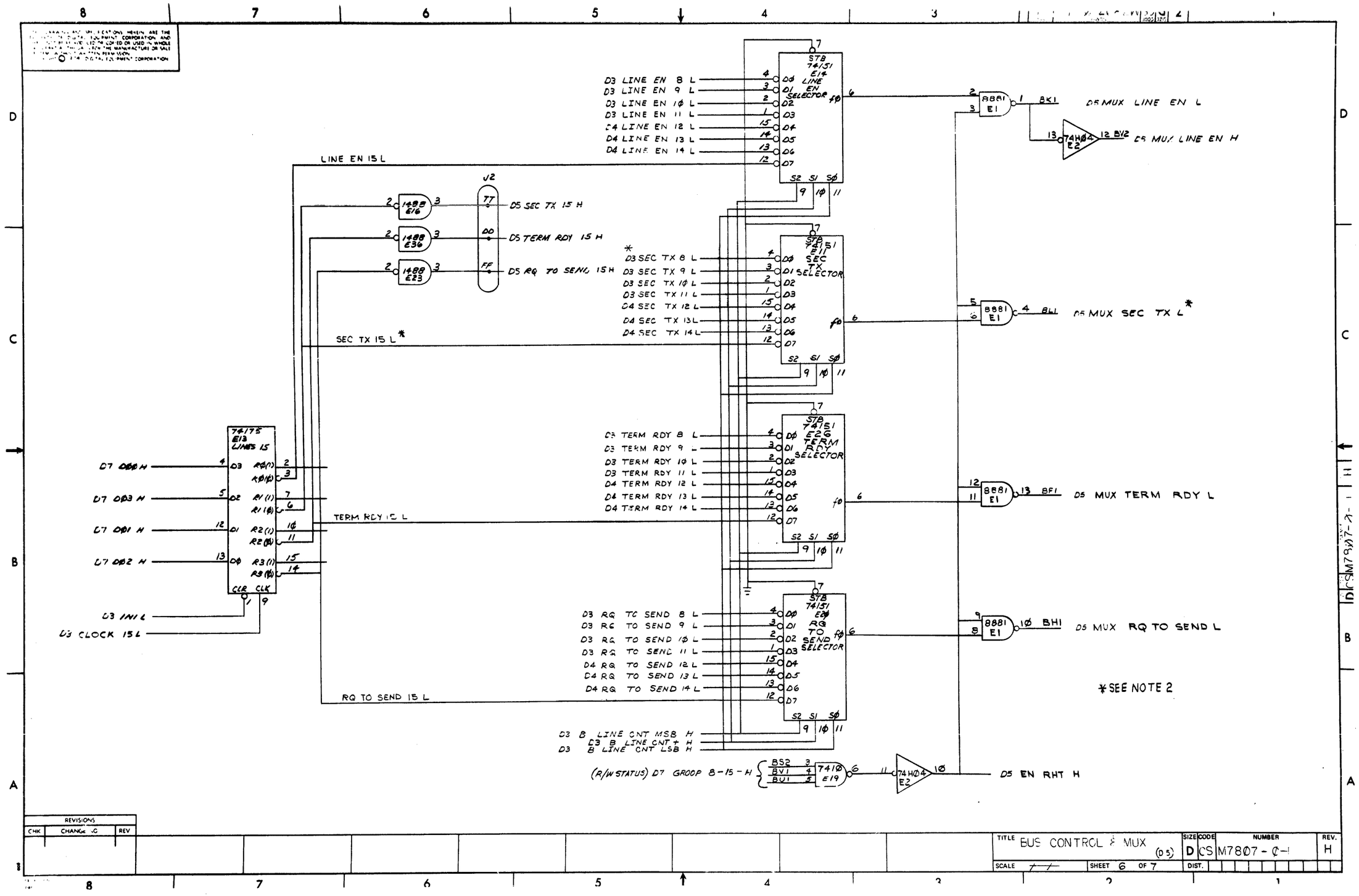

REVISIONS		
CHK	CHANGE	REV

TITLE	SIZE	CODE	NUMBER	REV.
BUS CONTROL & MUX (D5)	D	CS	M7807-C-1	H
SCALE —	SHEET 6 OF 7	DIST.		

THIS DRAWING AND SPECIFICATIONS, HEREIN, ARE THE PROPERTY OF DIGITAL EQUIPMENT CORPORATION, AND SHALL NOT BE REPRODUCED OR COPIED OR USED IN WHOLE OR IN PART AS THE BASIS FOR THE MANUFACTURE OR SALE OF ITEMS WITHOUT WRITTEN PERMISSION
COPYRIGHT © 1974 DIGITAL EQUIPMENT CORPORATION

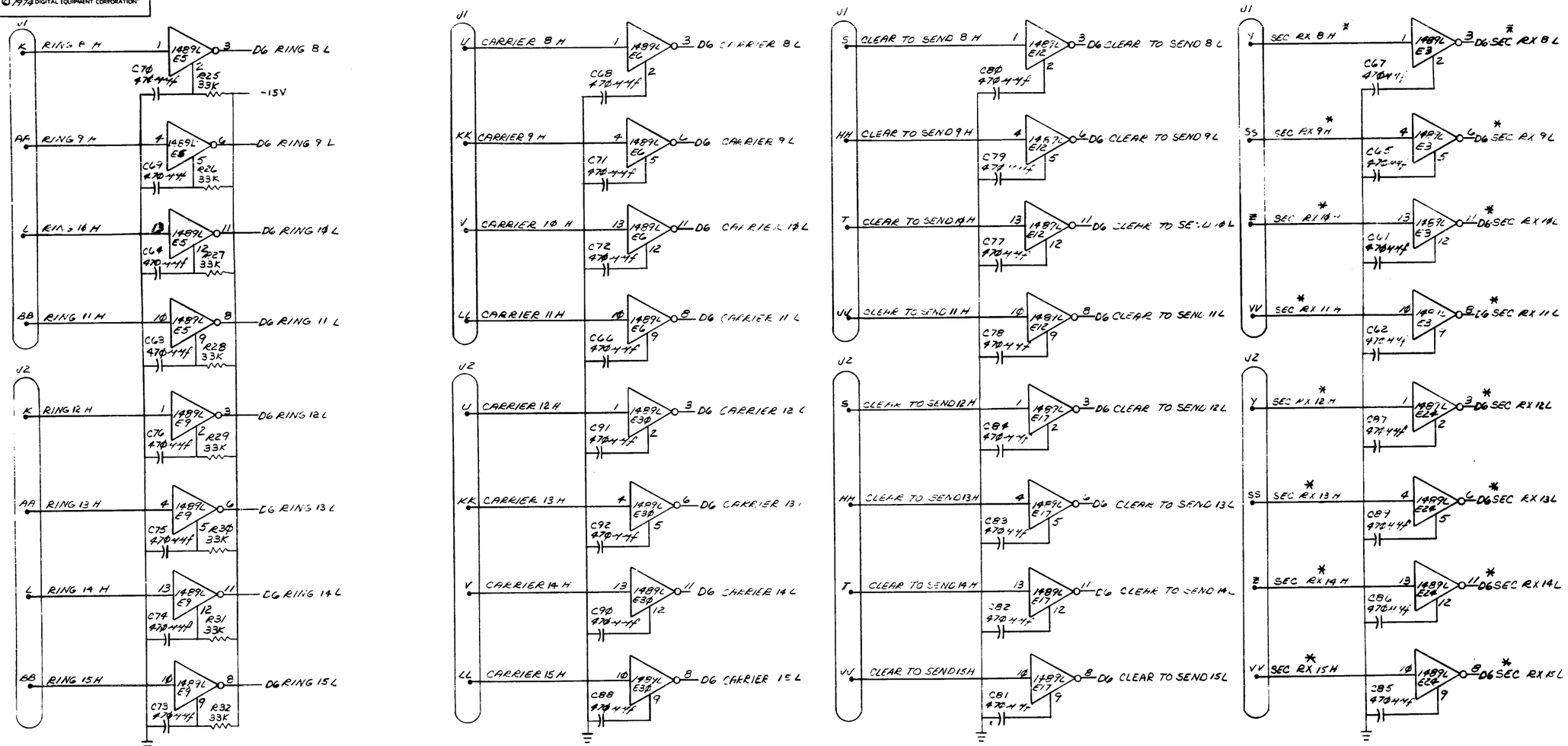

* SEE NOTE 2.

REVISIONS		
CHK	CHANGE 'O	REV

TITLE	SIZE	CODE	NUMBER	REV.
BUS CONTROL & MUX (D6)	D	CS	M7807-0-1	H
SCALE —	SHEET 7 OF 7		DIST.	

THIS DRAWING AND SPECIFICATIONS, HEREIN, ARE THE PROPERTY OF DIGITAL EQUIPMENT CORPORATION AND SHALL NOT BE REPRODUCED OR COPIED OR USED IN WHOLE OR IN PART AS THE BASIS FOR THE MANUFACTURE OR SALE OF ITEMS WITHOUT WRITTEN PERMISSION. COPYRIGHT © 1974, DIGITAL EQUIPMENT CORPORATION

NOTES:

1. THIS WIRE TO BE ADDED ON M5906-YA ONLY.

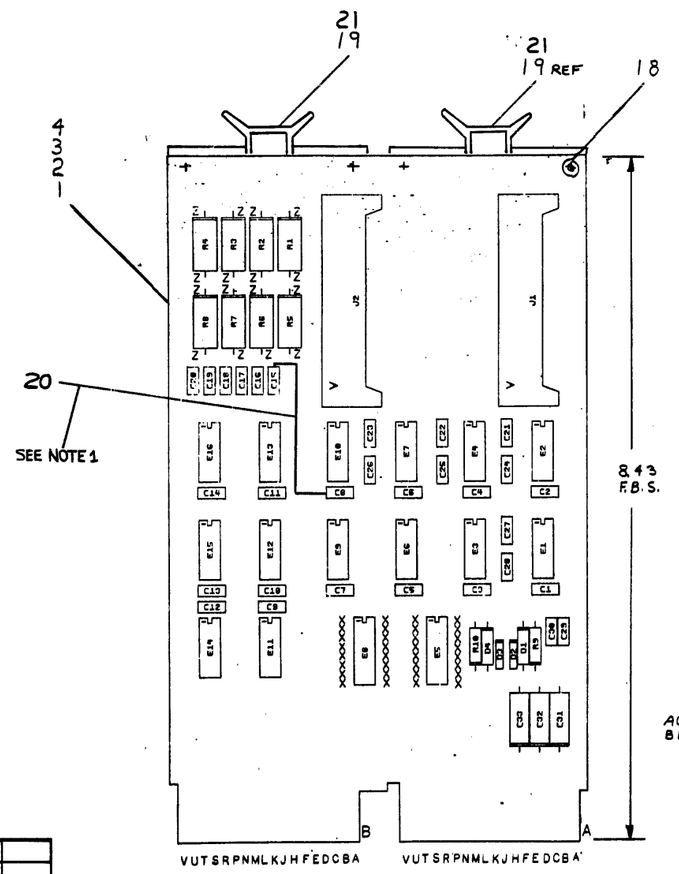

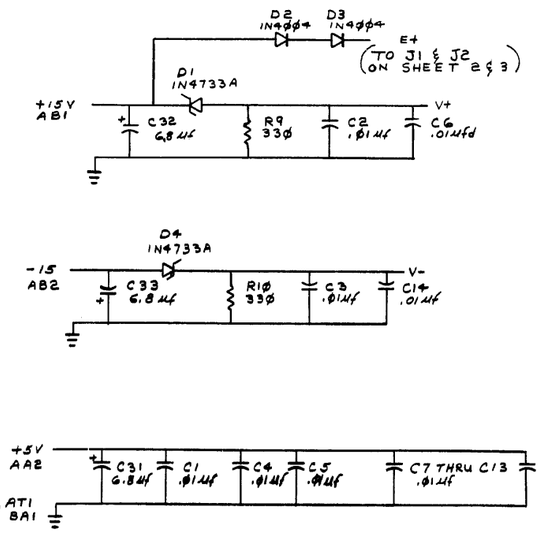

1488L RECEIVER		
V+	V-	GND
PIN 14	PIN 1	PIN 7

QTY. M5906-YA	QTY. M5906	REF DESIGNATION	DESCRIPTION	PART NO.	ITEM NO.
REF	REF		X-Y COORDINATE HOLE LOCATION	K-CO-M5906-0-4	1
REF	REF		ASSY/DRILLING HOLE LAYOUT	D-AH-M5906-0-6	2
REF	REF		MODULE ECO HISTORY	B-MH-M5906-0-6	3
1	1		ETCHED CIRCUIT BOARD	5010985	4
16	18	C15-30	CAP. 470 PFD 100V 5% D.M.	1000024	5
14	14	C1-14	CAP. .01 UFD 50V AXIAL CER.	1001810-01	6
3	3	C31-33	CAP. 6.8 UFD 35V 10% S. TANT	1005306	7
2	2	D2-3	DIODE 1N4004 1A PIV 400V	1105796	8
2	2	D1,D4	DIODE 1N4733A ≤1V ZENER 5% 40V	1109043	9
2	2	E5,E8	SOCKET 16 PIN GLASS	1209638	10
2	2	J1-2	40 PIN BERG CONNECTOR	1209941	12
2	2	R9-10	RES. 330 OHM 1/2W 5% CC	1300296	13
8	8	R1-8	RES. 750 OHM 1W 5% CC	1302385	14
6	6	E6,E9,E11-12,E14-15	I.C. DEC 7404	1909686	15
4	4	E2-3,E7,E16	I.C. DEC 1488L	1910322	16
4	4	E1,E4,E10,E13	I.C. DEC 1489L	1910323	17
4	4		EYELET HANDLE	9006732	18
2	2		FLIP CHIP HANDLE MAGENTA	9006377-6	19
As	—	SEE NOTE #1	#30 AWG GREEN WIRE	9105740-55	20

PARTS LIST

FIRST USED ON OPTION MODEL: DH11

ETCH BOARD REV: B

IC TYPE	GND	+ 5V

GND AND 5V ARE USUALLY PIN 7 AND 14 RESPECTIVELY EXCEPTIONS ARE STATED ABOVE

IC PIN LOCATIONS

REV	CHANGE NO.	CHK	ORIGINATED	M5906-00001	STEVE RATTLE 23 MAR 78	R. HARRINGTON	R. Gustafson 26 JUN 78
A							
B							

REVISIONS

DEC NO.	EIA NO.	DEC NO.	EIA NO.

SEMICONDUCTOR CONVERSION CHART

DRN. G. Wilson DATE 3/13/74
CHK'D DATE
ENG DATE
PROJ. ENG DATE
PROD. R. Wall DATE 6/13/74

NEXT HIGHER ASSY: B-DD-DH11-0

SCALE: NONE

SHEET 1 OF 3

digital EQUIPMENT CORPORATION MAYNARD MASSACHUSETTS

TITLE: EIA CONVERTER AND PRIORITY

SIZE/CODE: DCS NUMBER: M5906-0-1 REV. B

DIST.

THIS DRAWING AND SPECIFICATIONS, HEREIN, ARE THE PROPERTY OF DIGITAL EQUIPMENT CORPORATION AND SHALL NOT BE REPRODUCED OR COPIED OR USED IN WHOLE OR IN PART AS THE BASIS FOR THE MANUFACTURE OR SALE OF ITEMS WITHOUT WRITTEN PERMISSION.
COPYRIGHT © 1974, DIGITAL EQUIPMENT CORPORATION

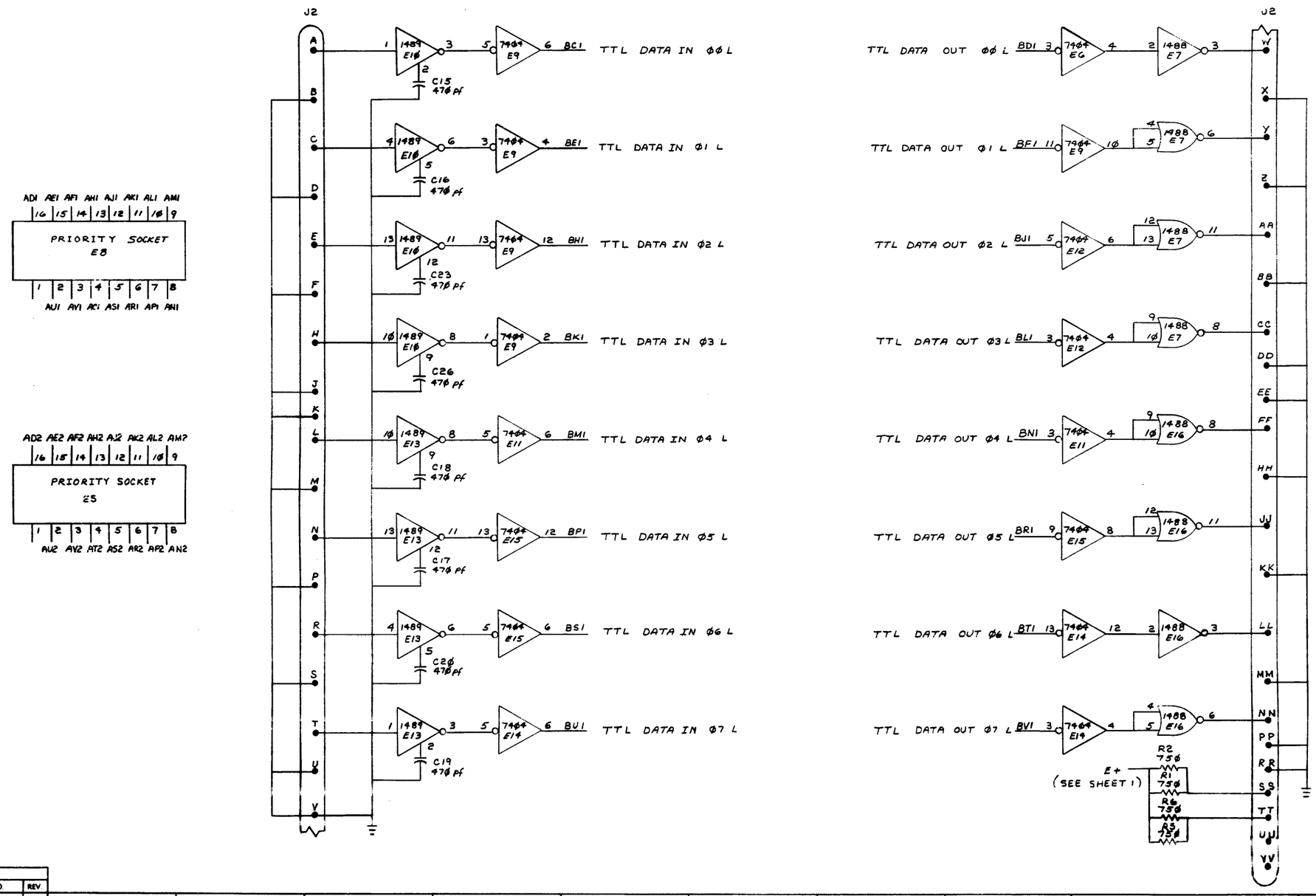

REVISIONS		
CHK	CHANGE NO.	REV.

TITLE EIA CONVERTER AND PRIORITY

SIZE D | CODE CS | NUMBER M59Ø6-Ø-1 | REV. B

SCALE — | SHEET 2 OF 3 | DIST.

MK

"THIS DRAWING AND SPECIFICATIONS, HEREIN, ARE THE PROPERTY OF DIGITAL EQUIPMENT CORPORATION AND SHALL NOT BE REPRODUCED OR COPIED OR USED IN WHOLE OR IN PART AS THE BASIS FOR THE MANUFACTURE OR SALE OF ITEMS WITHOUT WRITTEN PERMISSION.
COPYRIGHT © 1974 DIGITAL EQUIPMENT CORPORATION"

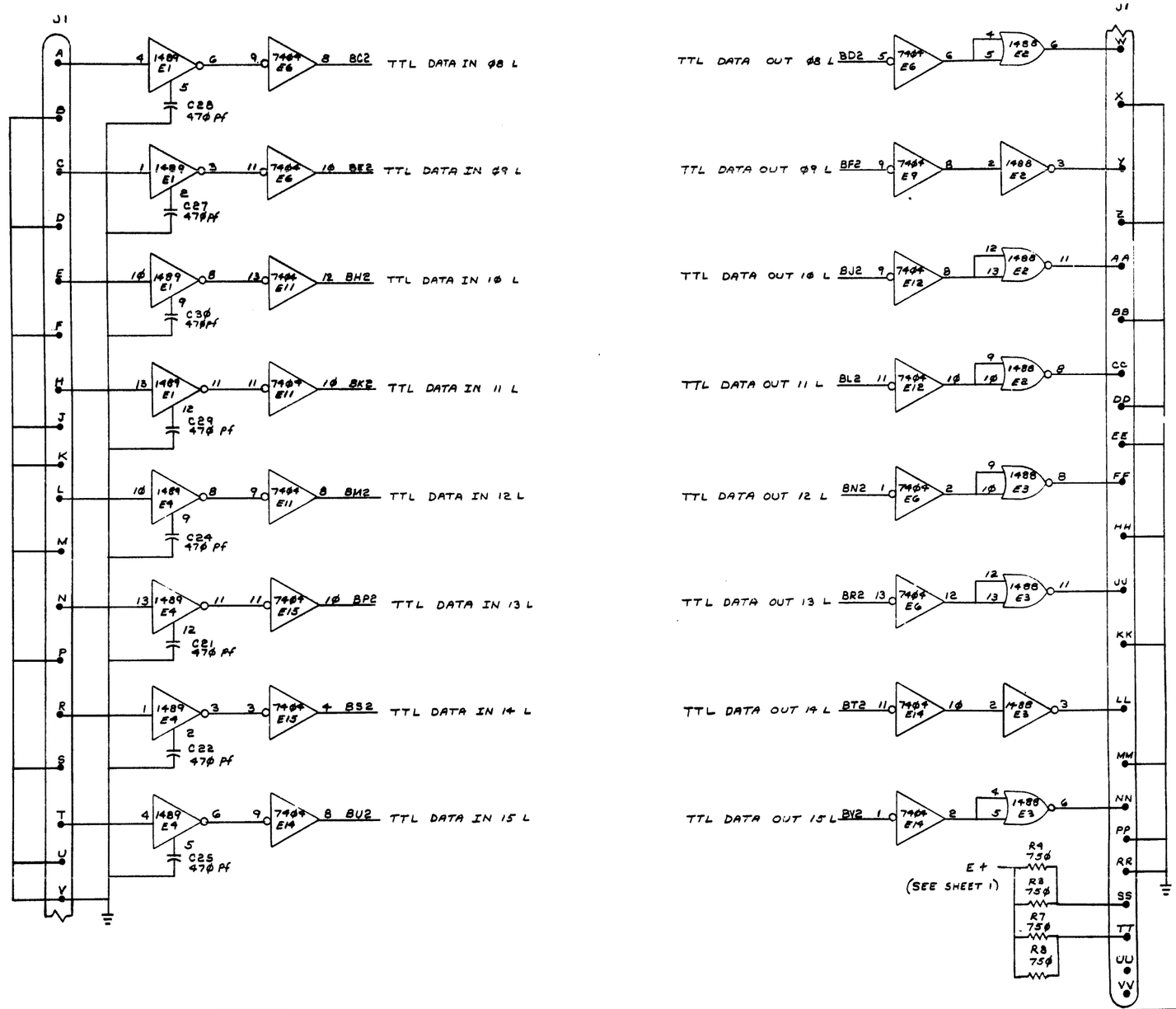

REVISIONS		
CHK	CHANGE NO.	REV.

TITLE	SIZE	CODE	NUMBER	REV.
EIA CONVERTER AND PRIORITY	D	CS	M59Ø6-Ø-1	B

SCALE — SHEET 3 OF 3 DIST. MK

DEC FORM NO DRD 132

NOTES

1. IF ITEM #11 IS USED THE DECAL (ITEM #24) IS TO BE APPLIED TO THE INSIDE SURFACE OF COVER ITEM #20
2. PRIOR TO MTG. DIST. PANEL, ADHERE NYLON WASHER (ITEM #21) TO STANDOFFS ON MTG PANEL (ITEM #1) USING ECO BOND ADHESIVE (ITEM #16) AND ALLOW TO DRY.
3. USE ASSY TOOL #9608416 TO POSITION LOGO ITEM #4 THRU #5 ON COVER (ITEM #20)
4. ON H317-A USE UPPER HOLES, ON H317-E USE MIDDLE HOLES.

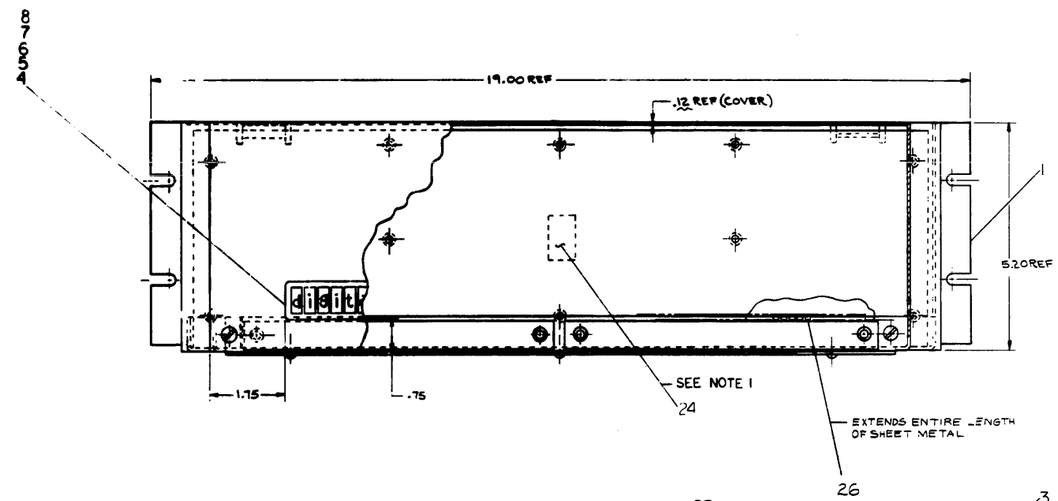

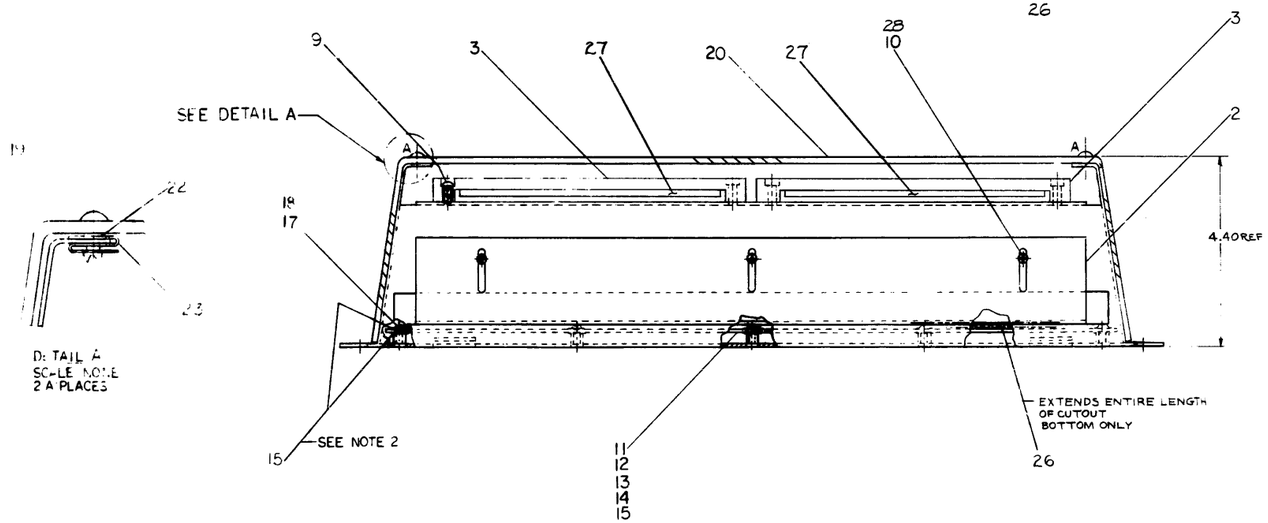

DETAIL A
SCALE NONE
2 A PLACES

3	3	3	3	3	LOCKWASHER INT #6	9006634	2[illegible]	
2	2	2	2	2	FOAM, ADHESIVE .12X.5X6.0	9309087-1	27	
AR	AR	AR	AR	AR	GROMMET ALLIGATOR	9307385	26	
1	1	1	1	1	PACKING INSTRUCTIONS	A-91-3700091-0-0	25	
—	—	—	—	1	DECAL	A-DC-7410681-0-0	24	
2	2	2	2	2	FASTENER STUD, 1/4 TURN	9008446-0-0	23	
2	2	2	2	2	RETAINER, SPLIT RING	9008200	22	
10	20	20	20	16	WASHER, NYLON #8	9006708	21	
1	1	1	1	1	COVER, CABLE BOX PLASTIC	D-PS-1212632-0-0	20	
2	2	2	2	2	RECEPTACLE CLIPON	9008196	19	
8	10	10	10	8	LOCKWASHER INT #8	9006634	18	
8	10	10	10	8	SCR. PHL HD. 8-32 X .25 LG.	9005035-1	17	
AR	AR	AR	AR	AR	ECOBOND ADHESIVE	9001156	16	
—	—	1	—	—	DVII DIST. PANEL	D-CS-5411153-0-1	15	
1	—	—	—	—	DZH DIST PANEL (TTY)	D-CS-5411974-0-1	14	
—	1	—	—	—	DZII DIST PANEL (EIA)	D-CS-5411928-0-1	13	
—	—	—	1	—	DJII DIST PANEL (EIA)	D-CS-5410260-0-1	12	
—	—	—	—	1	DJII DIST PANEL (TTY)	D-CS-5410262-0-1	11	
3	3	3	3	3	SCR. PHL PAN HD. 8-32 X .25 LG.	9006020-1	10	
4	4	4	4	4	SCR. PHL PAN HD. 6-32 X .62 LG.	9006025-1	9	
1	—	—	—	—	LOGO H317-F	C-IA-7414372-6-0	8	
—	1	—	—	—	LOGO H317-E	C-IA-7414372-5-0	7	
—	—	1	—	—	LOGO H317-C	C-IA-7414372-2-0	6	
—	—	—	1	—	LOGO H317-B	C-IA-7414372-1-0	5	
—	—	—	—	1	LOGO H317-A	C-IA-7414372-0-0	4	
2	2	2	2	2	BAR, CABLE HOLD DOWN	D-PS-1213516-0-0	3	
1	1	1	1	1	BAR, SLIDE	S-MD-7416248-0-0	2	
1	1	1	1	1	H317 MOUNTING PLATE	B-IA-7416243-0-0	1	
H317-F	H317-E	H317-C	H317-B	H317-A	QUANTITY & VARIATION			

DESCRIPTION | MATERIAL SPEC. | ITEM NO.

UNLESS OTHERWISE SPECIFIED DIMENSIONS ARE IN INCHES

ANGLES NO 30'	FLAT OR ASSEMBLY	DECIMALS					
SURFACE QUALITY	±0	.X	.XX	.XXX	.XXXX	.XXXXX	
		±0.1	±0.01	±0.005	±0.0005	±0.00005	
	MEDIUM ±0	±.004	±.002	±.001	±.0005	±.0001	
	PRECISION ±0	±.0002	±0.0005	±.0001	±.0001	±.0001	±0.1

THIRD ANGLE PROJECTION

DO NOT SCALE DWG

MATERIAL: SEE PARTS LIST

DRN [redacted] 2-8-87
CHK'D [redacted] 4-8-87
ENG [redacted] 4-8-87
PROD [redacted] 4-8-87
NEXT HIGHER ASSY. B-00-H317-0
SCALE 1/1
SHEET 1 OF 1

FIRST USED ON H317

TITLE H317 CABLE BOX ASSY

SIZE B CODE IA NUMBER H317-0-0 REV

DWG. H317-0-0

This drawing and specifications herein, are the property of Digital Equipment Corporation and shall not be reproduced or copied or used in whole or in part as the basis for the manufacture or sale of items without written permission. COPYRIGHT © 1972 DIGITAL EQUIPMENT CORPORATION

NOTES:

1. JUMPERS W34 THRU W49 AND W83 THRU W98 SHOULD BE OUT WHEN MODEM CONTROL (M7807+M7808) MODULES) IS PROVIDED. THESE JUMPERS SHOULD BE IN IF NO MODEM CONTROL IS PROVIDED.
2. JUMPERS W5, W6, W10, W14, W18, W22, W26, W30, W51 W55, W59, W63, W67, W71, W75, W79 SHOULD BE OUT EXCEPT FOR THE FOLLOWING & THESE JUMPERS SHOULD BE IN IF CONTROL OF 103E, 113B MAKE BUSY LEAD BY RTS IS DESIRED. NOTE THAT ASSERTION OF RTS MAKES MODEM AND LINE BUSY. (UNAVAILABLE FOR CALLS)

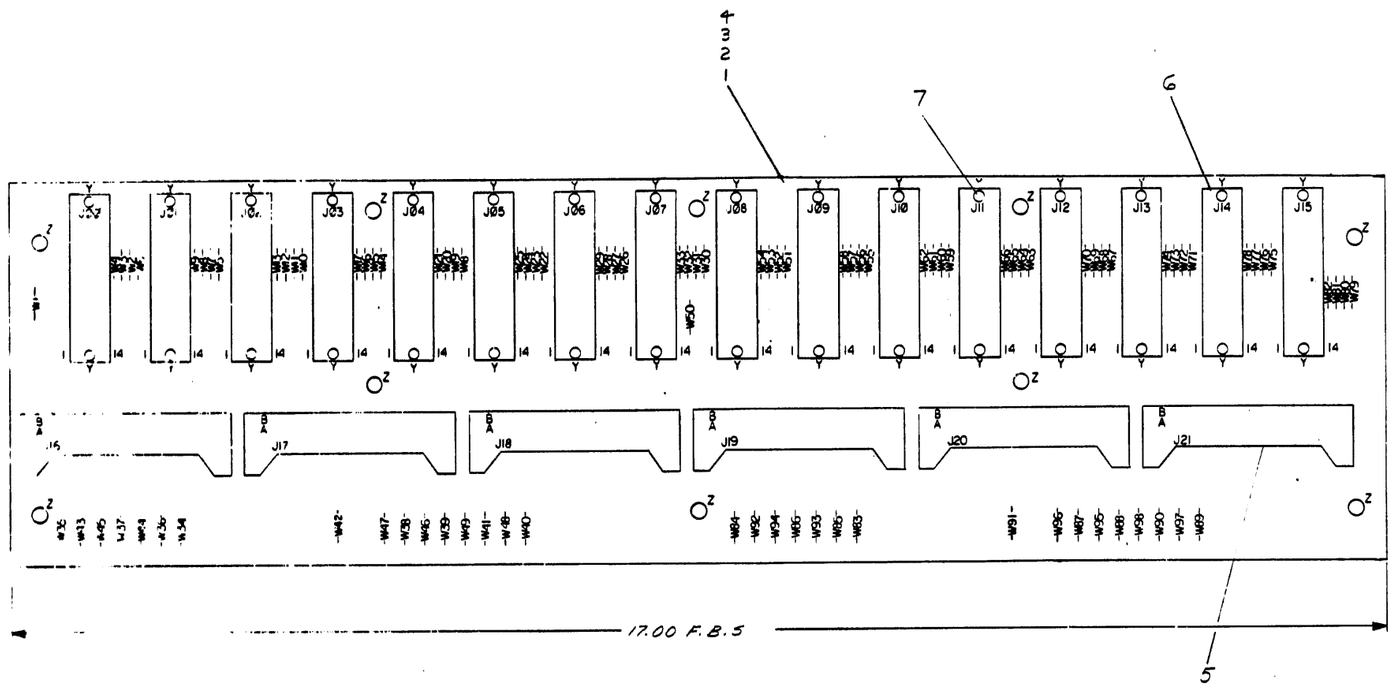

QTY	REF DESIGNATION	DESCRIPTION	PART NO.	ITEM NO.
REF		X-Y COORDINATE HOLE LOCATION	K-CO-5410260-04	1
REF		ASSY DRILLING HOLE LAYOUT	D-AH-5410260-06	2
REF		MODULE ECO HISTORY	B-MH-5410260-06	3
1		ETCHED CIRCUIT BOARD	5010259	4
6		BERG CONNECTOR	1209941	5
16		EIA CONNECTOR	1205886-01	6
32		SCREW LOCK ASSY	9008451	7

PARTS LIST

ETCH BOARD REV C

FIRST USED ON OPTION MODEL: H317

IC TYPE	GND	+5V
GND AND 5V ARE USUALLY PIN 7 AND 14 RESPECTIVELY EXCEPTIONS ARE STATED ABOVE		

IC PIN LOCATIONS

REV	CHANGE NO.	CHK
C	5410260-0001	ORIGINATED
B		

REVISIONS

V. BASTIANI (9) Mar 27-Oct-75

DEC NO.	EIA NO.	DEC NO.	EIA NO.

SEMICONDUCTOR CONVERSION CHART

DRN. 11-8-72
CHK'D. 11/30/73
ENG. 12/1/73
PROJ. ENG. 12/1/73
PROD. 12/1/73

NEXT HIGHER ASSY B-DD-H317-0

SCALE NONE

SHEET 1 OF 3

digital EQUIPMENT CORPORATION MAYNARD, MASSACHUSETTS

TITLE DJ-11 DISTRIBUTION PANEL (EIA)

SIZE CODE D CS NUMBER 5410260-0-1

DIST.

REV C

This drawing and specifications, herein, are the property of Digital Equipment Corporation and shall not be reproduced or copied or used in whole or in part as the basis for the manufacture or sale of items without written permission. COPYRIGHT © 1972
DIGITAL EQUIPMENT CORPORATION

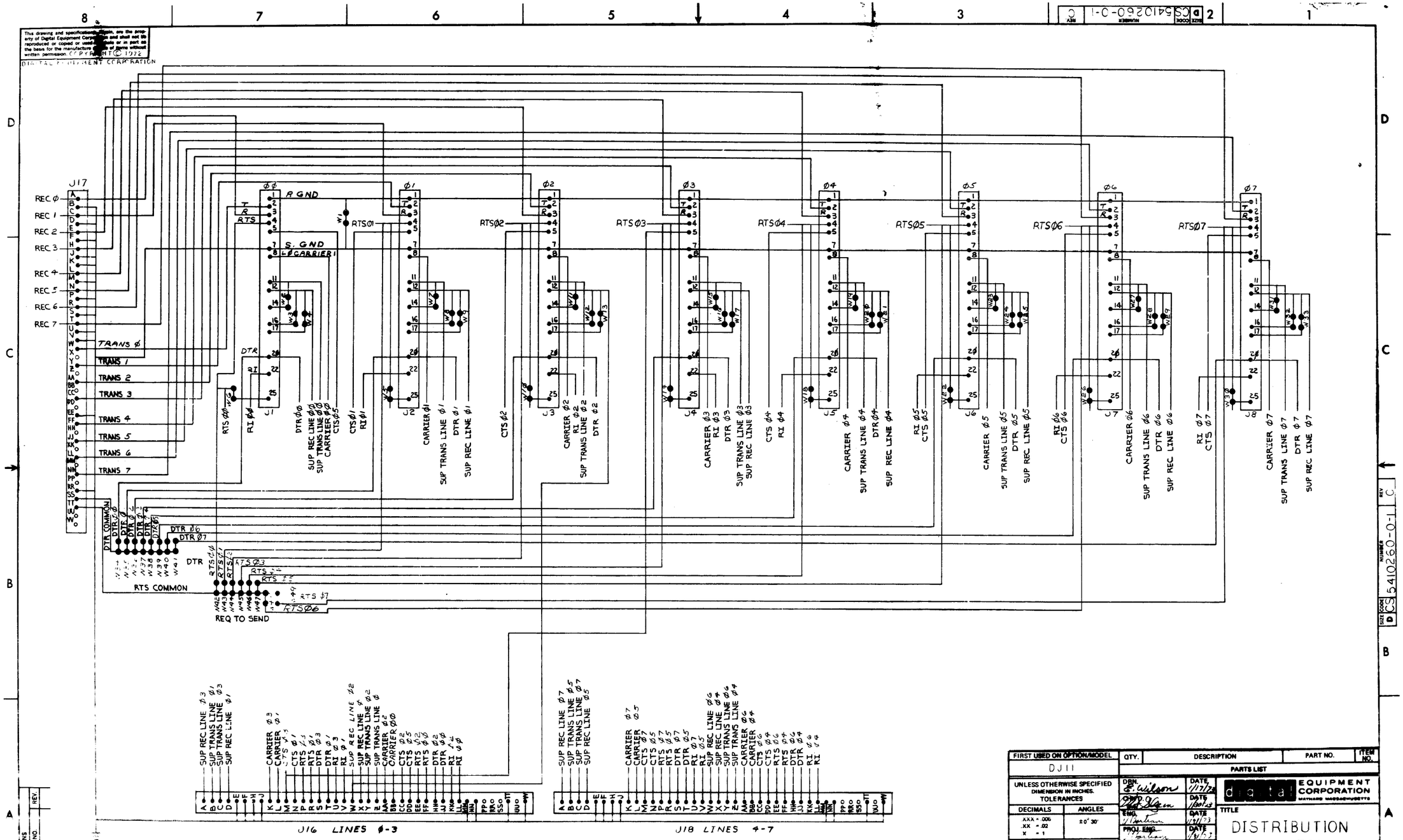

FIRST USED ON OPTION/MODEL	QTY.	DESCRIPTION	PART NO.	ITEM NO.
DJ11		PARTS LIST		

UNLESS OTHERWISE SPECIFIED DIMENSION IN INCHES. TOLERANCES

DECIMALS	ANGLES
.XXX ± .005 .XX ± .02 X ± 1	±0° 30'

REMOVE BURRS AND BREAK SHARP CORNERS SURFACE QUALITY ✓

MATERIAL

FINISH

		DATE
DRN.	E. Wilson	1/17/73
CHKD.		1/30/73
ENG.		1/31/73
PROJ. ENG.		1/31/73
PROD.		2/1/73

NEXT HIGHER ASSY. B-DD-H317-Ø

SCALE NONE

SHEET 2 OF 3

digital EQUIPMENT CORPORATION MAYNARD MASSACHUSETTS

TITLE DISTRIBUTION PANEL EIA

SIZE	CODE	NUMBER	REV.
D	CS	5410260-0-1	C

REVISIONS: REV. | CHANGE NO. | CHK

DEC FORM NO. DIRD 1818-A

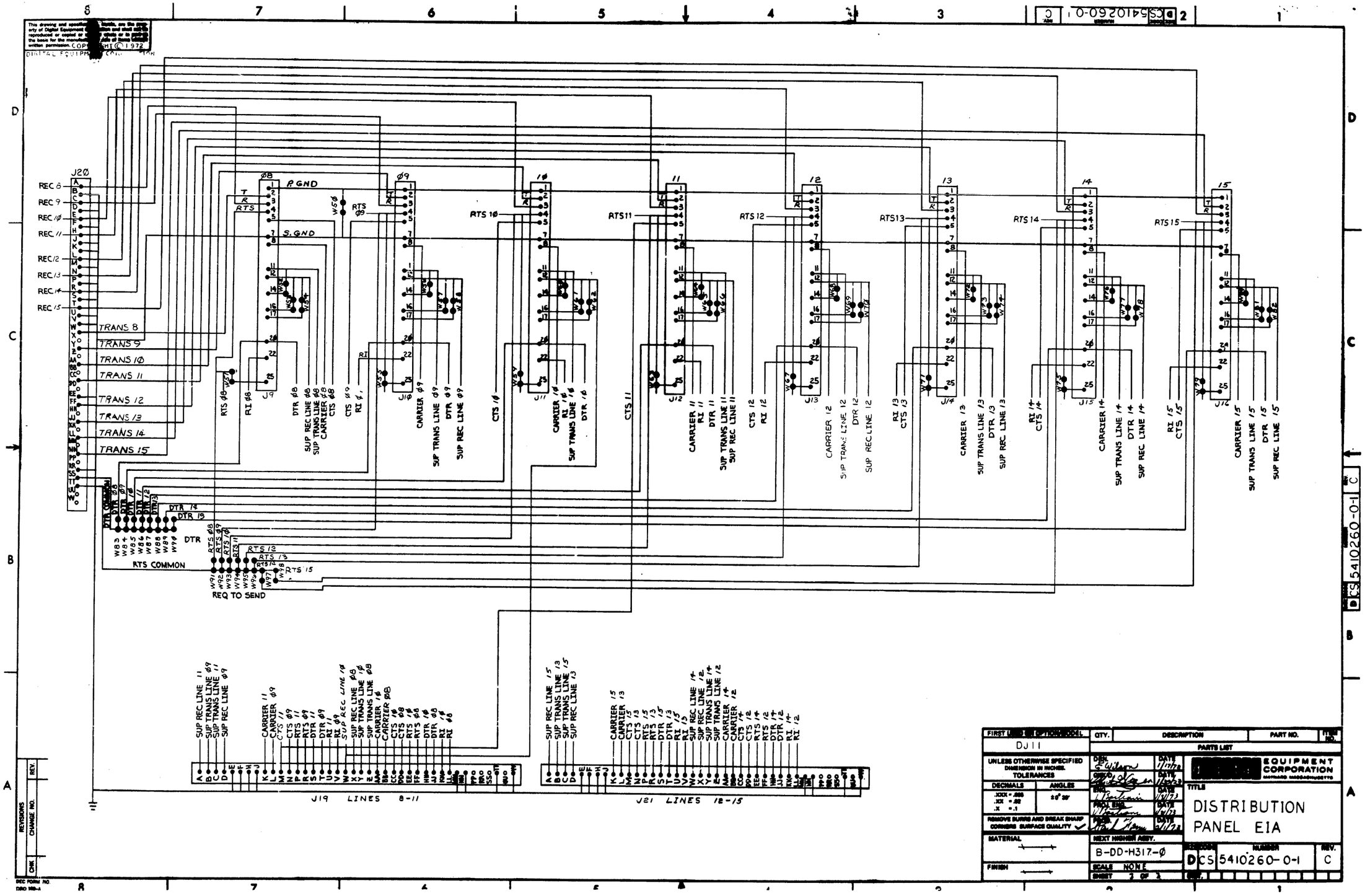
J20
REC 8
REC 9
REC 10
REC 11
REC 12
REC 13
REC 14
REC 15
TRANS 8
TRANS 9
TRANS 10
TRANS 11
TRANS 12
TRANS 13
TRANS 14
TRANS 15
DTR COMMON
DTR 8
DTR 9
DTR 10
DTR 11
DTR 12
DTR 13
DTR 14
DTR 15
DTR
RTS COMMON
REQ TO SEND
P GND
S GND
RTS 8
RTS 9
RTS 10
RTS 11
RTS 12
RTS 13
RTS 14
RTS 15
J9
J10
J11
J12
J13
J14
J15
J16
J19 LINES 8-11
J21 LINES 12-15
DJ11
DCS 5410260-0-1
DISTRIBUTION PANEL EIA
EQUIPMENT CORPORATION
B-DD-H317-0
NONE
2 OF 2
REVISIONS
CHANGE NO.
REV.
DEC FORM NO.

"THIS DRAWING AND SPECIFICATIONS, HEREIN, ARE THE PROPERTY OF DIGITAL EQUIPMENT CORPORATION AND SHALL NOT BE REPRODUCED OR COPIED OR USED IN WHOLE OR IN PART AS THE BASIS FOR THE MANUFACTURE OR SALE OF ITEMS WITHOUT WRITTEN PERMISSION. COPYRIGHT © 1974, DIGITAL EQUIPMENT CORPORATION"

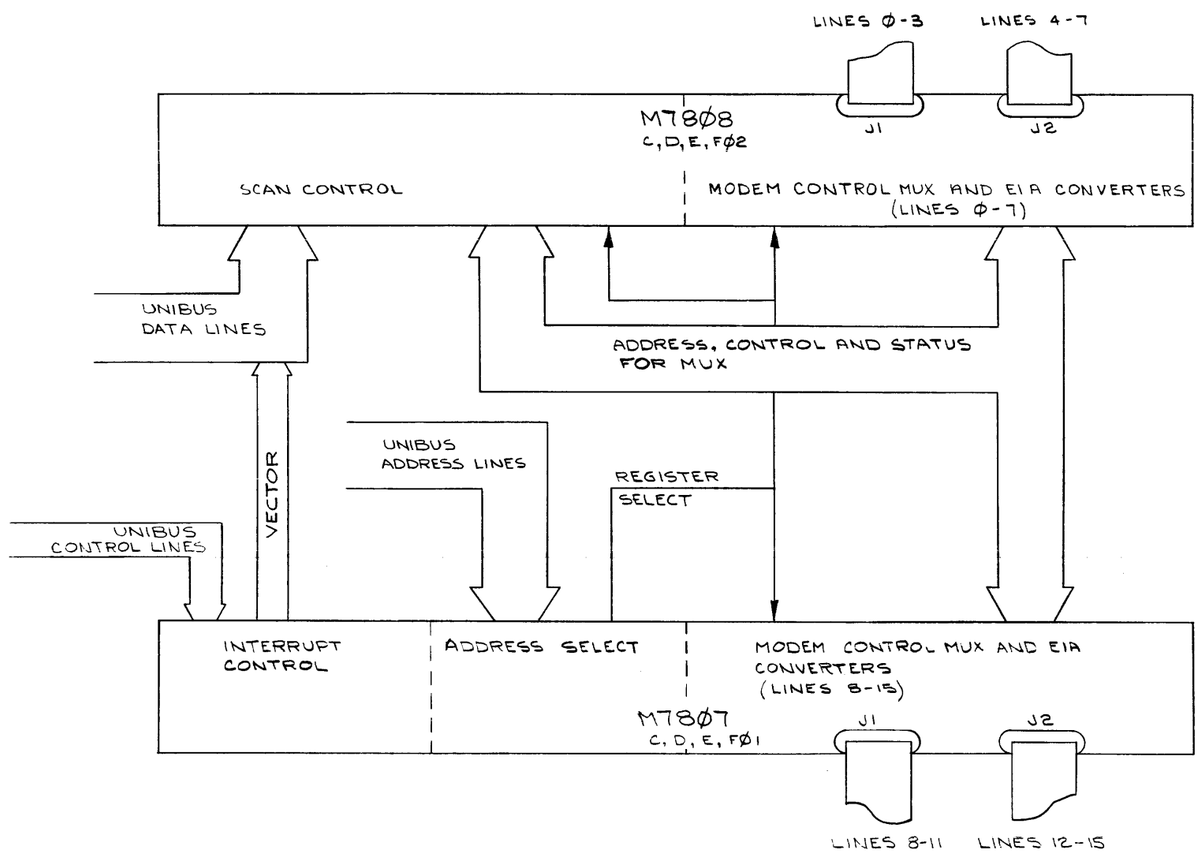

FIRST USED ON OPTION/MODEL	QTY.	DESCRIPTION	PART NO.	ITEM NO.
DH11		PARTS LIST		

DIMENSIONAL TOLERANCE
DIMENSIONS ARE MILLIMETERS / INCHES UNLESS OTHERWISE SPECIFIED

MILLIMETERS	INCHES	ANGLES
X.XX = ±0.10 X.X = ±0.5 X = ±2.	.XXX = ±.005 .XX = ±.02 .X = ±.1	±0° 30'

THIRD ANGLE PROJECTION

REMOVE BURRS AND BREAK SHARP CORNERS SURFACE QUALITY ✓

MATERIAL —/—

FINISH —/—

		DATE
DRN.	[illegible]	6-7-74
CHK'D.	[illegible]	6-7-74
ENG.	[illegible]	6-30-74
PROJ. ENG.	[illegible]	6-30-74
PROD.	[illegible]	6-3-74

NEXT HIGHER ASSY. B-DD-DH11-0

SCALE —/—

SHEET 1 OF 2

digital

TITLE DH11 MODEM CONTROL

SIZE	CODE	NUMBER	REV.
D	BD	DH11-Ø-16	

DIST.

REVISIONS: REV. / CHANGE NO. / CHK

DEC FORM # [illegible]

"THIS DRAWING AND SPECIFICATIONS, HEREIN, ARE THE PROPERTY OF DIGITAL EQUIPMENT CORPORATION AND SHALL NOT BE REPRODUCED OR COPIED OR USED IN WHOLE OR IN PART AS THE BASIS FOR THE MANUFACTURE OR SALE OF ITEMS WITHOUT WRITTEN PERMISSION. COPYRIGHT © 1974, DIGITAL EQUIPMENT CORPORATION"

NOTES:

1. MODULE PINS, AS USED IN THIS PRINT, ARE AS PER SYSTEM UNIT BACK PANEL WIRES.
2. ✱ REMOVE WIRES TO INHIBIT INTERRUPTS FROM TRANSITIONS.
3. ✱✱ REMOVE WIRE TO INHIBIT INITIALIZE FROM CLEARING THE SCAN AND MUX MODULES

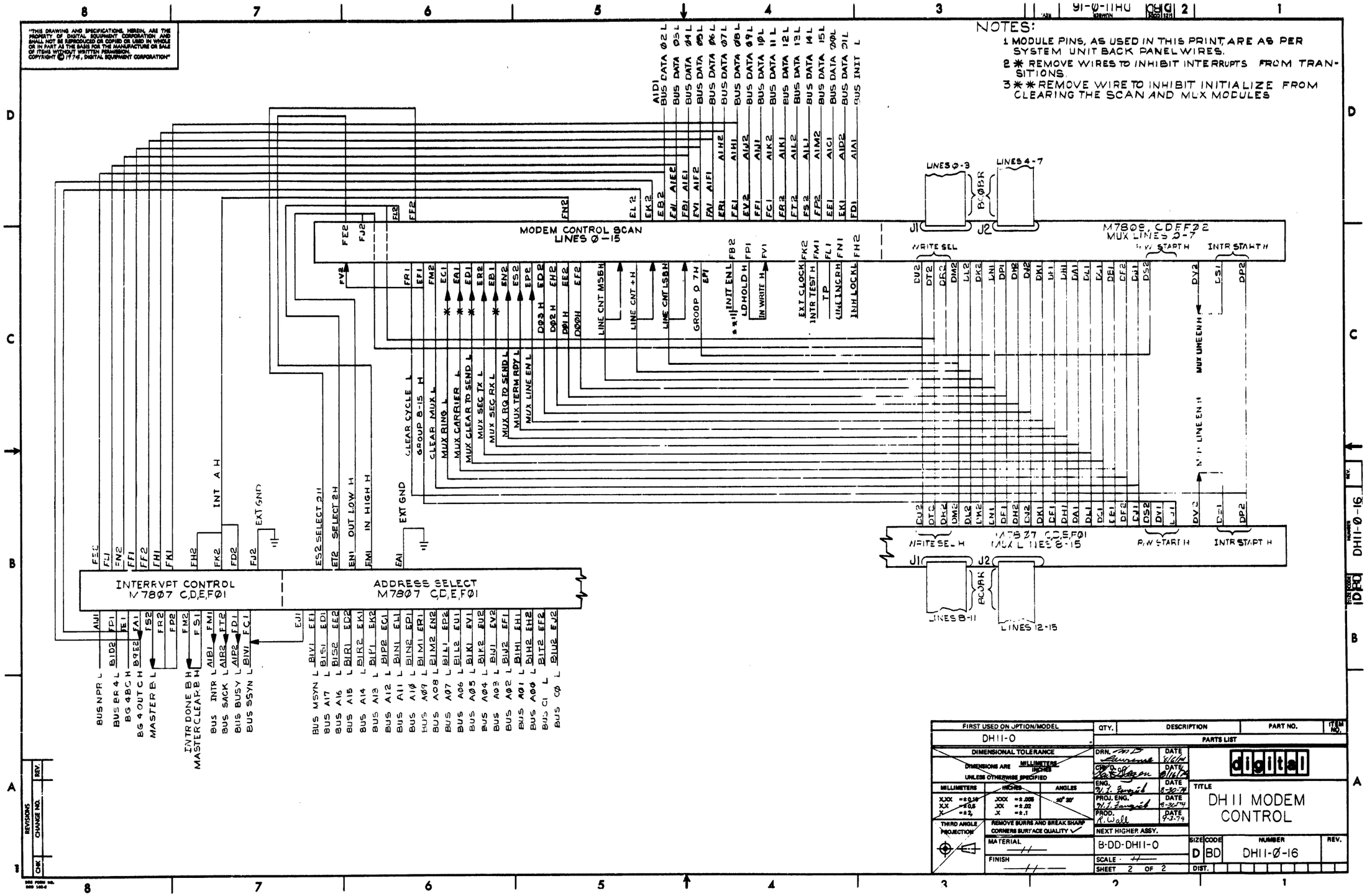

FIRST USED ON OPTION/MODEL	QTY.	DESCRIPTION	PART NO.	ITEM NO.
DH11-0		PARTS LIST		

DIMENSIONAL TOLERANCE — DIMENSIONS ARE MILLIMETERS/INCHES UNLESS OTHERWISE SPECIFIED

MILLIMETERS	INCHES	ANGLES
X.XX = ±0.10	.XXX = ±.005	30' 20'
X.X = ±0.5	.XX = ±.02	
X = ±2	.X = ±.1	

THIRD ANGLE PROJECTION — REMOVE BURRS AND BREAK SHARP CORNERS SURFACE QUALITY ✓

MATERIAL —//—

FINISH —//—

		DATE
DRN.	[illegible]	8/6/74
CHK.	[illegible]	8/16/74
ENG.	W. Zangel	8-30-74
PROJ. ENG.	W. Zangel	8-30-74
PROD.	R. Wall	9-3-74

NEXT HIGHER ASSY. B-DD-DH11-0

SCALE —//—

SHEET 2 OF 2

digital

TITLE DH11 MODEM CONTROL

SIZE	CODE	NUMBER	REV.
D	BD	DH11-Ø-16	

DIST.

REVISIONS — REV. / CHANGE NO. / CHK.

DH11-0-16

"THIS DRAWING AND SPECIFICATIONS, HEREIN, ARE THE PROPERTY OF DIGITAL EQUIPMENT CORPORATION AND SHALL NOT BE REPRODUCED OR COPIED OR USED IN WHOLE OR IN PART AS THE BASIS FOR THE MANUFACTURE OR SALE OF ITEMS WITHOUT WRITTEN PERMISSION.
COPYRIGHT © 1976 DIGITAL EQUIPMENT CORPORATION"

WIRE TABLE

FROM	TO	FROM	TO
P1-A	P2-VV	P1-Y	P2-X
P1-B	P2-UU	P1-Z	P2-W
P1-C	P2-TT	P1-AA	P2-V
P1-D	P2-SS	P1-BB	P2-U
P1-E	P2-RR	P1-CC	P2-T
P1-F	P2-PP	P1-DD	P2-S
P1-H	P2-NN	P1-EE	P2-R
P1-J	P2-MM	P1-FF	P2-P
P1-K	P2-LL	P1-HH	P2-N
P1-L	P2-KK	P1-JJ	P2-M
P1-M	P2-JJ	P1-KK	P2-L
P1-N	P2-HH	P1-LL	P2-K
P1-P	P2-FF	P1-MM	P2-J
P1-R	P2-EE	P1-NN	P2-H
P1-S	P2-DD	P1-PP	P2-F
P1-T	P2-CC	P1-RR	P2-E
P1-U	P2-BB	P1-SS	P2-D
P1-V	P2-AA	P1-TT	P2-C
P1-W	P2-Z	P1-UU	P2-B
P1-X	P2-Y	P1-VV	P2-A

LEGEND

NUMBER	DIM "X"	PRECUT LENGTH
BCØBR-Ø1	1.00 FT.	1.00FT.1.5IN±.100IN
BCØBR-Ø2	2.00 FT.	2.00FT1.5IN±.100IN
BCØBR-Ø3	3.00 FT.	3.00FT.1.5IN±1.00IN
BCØBR-Ø4	4.00 FT.	4.00FT.1.5IN±1.00IN
BCØBR-Ø5	5.00 FT.	5.00FT.1.5IN±1.00IN
BCØBR-Ø6	6.00 FT.	6.00FT.1.5IN±2.00IN
BCØBR-Ø7	7.00 FT.	7.00FT.1.5IN±2.00IN
BCØBR-Ø8	8.00 FT.	8.00FT.1.5IN±2.00IN
BCØBR-Ø9	9.00 FT.	9.00FT.1.5IN±2.00IN
BCØBR-1Ø	10.00 FT.	10.00FT.1.5IN±2.00IN
BCØBR-11	11.00 FT.	11.00FT.1.5IN±3.00IN
BCØBR-12	12.00 FT.	12.00FT.1.5IN±3.00IN
BCØBR-13	13.00 FT	13.00FT.1.5IN±3.00IN
BCØBR-14	14.00 FT	14.00FT.1.5IN±3.00IN
BCØBR-15	15.00 FT	15.00FT.1.5IN±3.00IN
BCØBR-16	16.00 FT	16.00FT.1.5IN±3.00IN
BCØBR-17	17.00 FT	17.00FT.1.5IN±3.00IN
BCØBR-18	18.00 FT	18.00FT.1.5IN±3.00IN
BCØBR-19	19.00 FT	19.00FT.1.5IN±3.00IN
BCØBR-2Ø	2Ø.00 FT	20.00FT.1.5IN±3.00IN
BCØBR-25	25.00 FT	25.00FT.1.5IN±3.00IN
BCØBR-3Ø	30.00 FT	30.00FT.1.5IN±0.60FT
BCØBR-35	35.00 FT	35.00FT.1.5IN±0.70FT
BCØBR-5Ø	50.00 FT	50.00FT.1.5IN±1.00FT
BCØBR-6Ø	60.00 FT	60.00FT±1.5IN±1.20FT
BCØBR-75	75.00 FT	75.00FT.1.5IN±1.50FT
BCØBR-AØ	100.00 FT	100.00FT1.5IN±2.00FT
BCØBR-A3	130.00 FT	130.00FT1.5IN±2.00FT
BCØBR-A6	160.00 FT	160.00FT1.5IN±2.00FT

1. ASSEMBLE THIS CABLE PER PROCESS SPEC #7606485-Ø-Ø.
2. CONNECTOR LEGEND IDENTIFICATION TO BE PLACED ON SHIELD SIDE OF CABLE IN THIS AREA AS SHOWN.
3. INSPECTION & TEST STAMPS TO BE PLACED AT EACH END OF THE CABLE ASSY.
4. STRIP LENGTH SHOULD BE .62 ± 4/32.

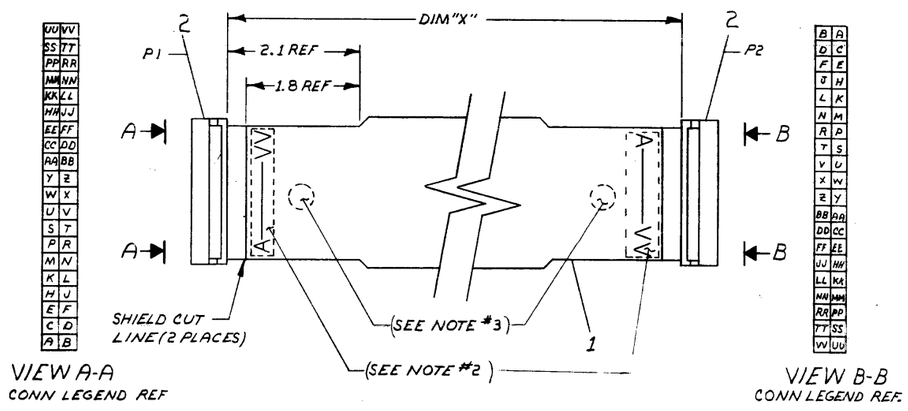

2	CONNECTOR, 4Ø SOCKET	1211206	2
A/R	CABLE, 4Ø COND. FLAT W/SHIELD	17ØØØØ4	1
	DESCRIPTION	DWG./PART NO.	ITEM NO.

UNLESS OTHERWISE SPECIFIED DIMENSIONS ARE IN INCHES

ANGLES ±0° 30'	CLASS OF ACCURACY (CHECK ONE)	NOMINAL DIMENSION RANGE INCHES					
SURFACE QUALITY IN MICROINCHES		OVER 0 TO 0.2	OVER 0.2 TO 1.2	OVER 1.2 TO 4.0	OVER 4.0 TO 12.0	OVER 12.0 TO 48.0	OVER 48.0 TO 96.0
	MEDIUM	±.004	±.006	±.012	±.016	±.024	±.04
	PREFERRED	±.012	±.016	±.025	±.04	±.063	±0.1

QUANTITY & VARIATION

THIRD ANGLE PROJECTION

REMOVE BURRS AND BREAK SHARP CORNERS

DO NOT SCALE DWG

MATERIAL

FINISH

DRWN	D. FONTAINE	8-28-70
CHK'D	J. FLEMING	8-28-70
ENG	P. GARDNER	9-3-70
PROJ. ENG	GARDNER	9-3-70
PROD.	DONALD	9-4-70

NEXT HIGHER ASSY.

SCALE

SHEET 1 OF 1

FIRST USED ON 01-00-0

TITLE BCØ8R I/O CABLE

SIZE	CODE	NUMBER	REV.
D	UA	BCØ8R-Ø-Ø	M

DIST.

REVISIONS			
CHK	CHANGE NO.		REV.
P.G.	BCØ8R 0004	REVISED & REDRAWN	L
J. Holmes			
S. HOLMES			
J. McGinn	BCØ8R 0007		M
P. GARDNER			

DEC FORM 105

This drawing and specifications, herein, are the property of Digital Equipment Corporation and shall not be reproduced or copied or used in whole or in part as the basis for the manufacture or sale of items without written permission.

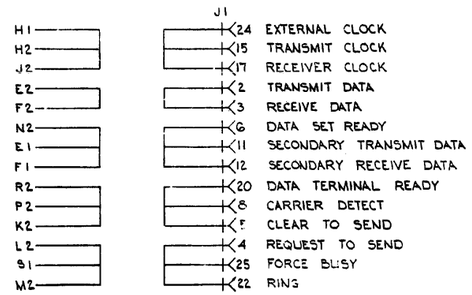

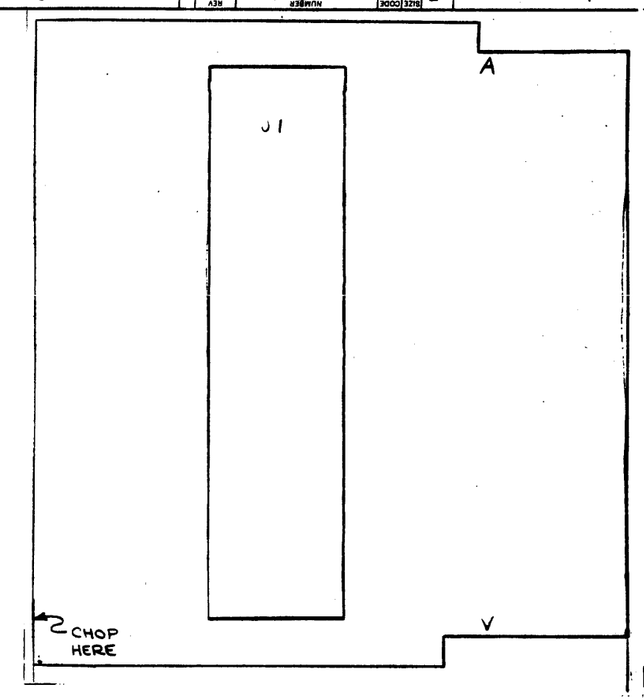

QTY	REF DESIGNATION	DESCRIPTION	PART NO.	ITEM NO.
		~~SYSTEM FIRMWARE~~	~~0006711~~	6
1	J1	CONN. CINCH DB-25S-	1210247	5
1		ETCHED CIRCUIT	501002C	4
		MODULE ECO HISTO...	B-MM-H315-0-6	3
		ASSY/DRILLING HOLE	C-AM-H315-0-5	2
		X-Y COORDINATE HOLE LOCATION	K-CO-H315-0-4	1
QTY	REF. DESIGNATION	DESCRIPTION	DEC PART NO.	ITEM NO.

PARTS LIST

ETCH BOARD REV A B

DEC NO.	EIA NO.	DEC NO.	EIA NO.

SEMICONDUCTOR CONVERSION CHART

REV	CHANGE NO.	CHK
A	H315-0-001	

REVISIONS

DRN. Roger Bouchette DATE 3-5-72
CHK'D. DATE 3-16-72
DSIGN ENG DATE 3-17-72
PROJ ENG DATE 3-17-72
PRODUCT ENG DATE 3/24/72
NEXT HIGHER ASSY
SCALE
SHEET 1 OF 1

digital EQUIPMENT CORPORATION
MAYNARD, MASSACHUSETTS

TITLE
MODEM TEST CONNECTOR

SIZE CODE DCS NUMBER H315-0-1 REV. A
DIST.

DEC FORM NO. DRD-135

THIS SCHEMATIC IS FURNISHED ONLY FOR TEST AND MAINTENANCE PURPOSES. THE CIRCUITS ARE PROPRIETARY IN NATURE AND SHOULD BE TREATED ACCORDINGLY
COPYRIGHT 1971 BY DIGITAL EQUIPMENT CORPORATION

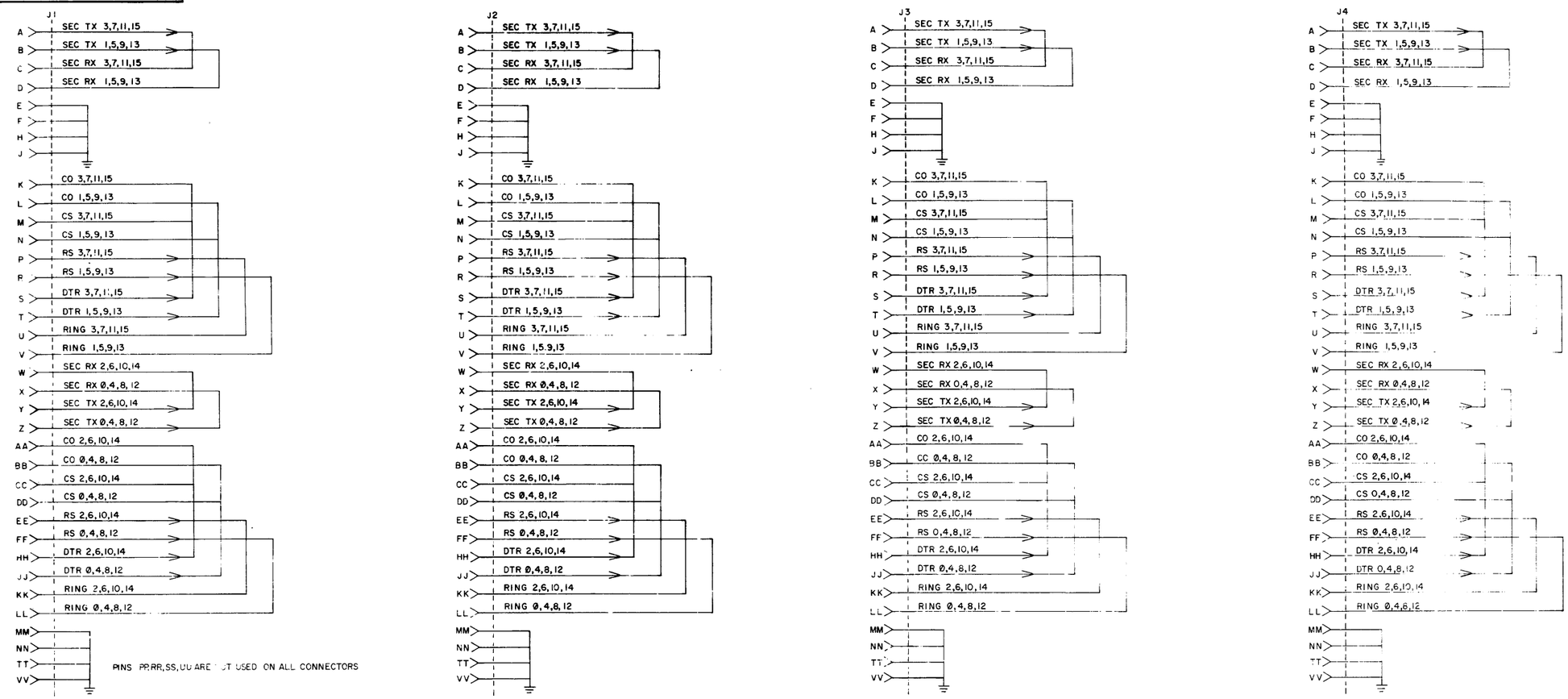

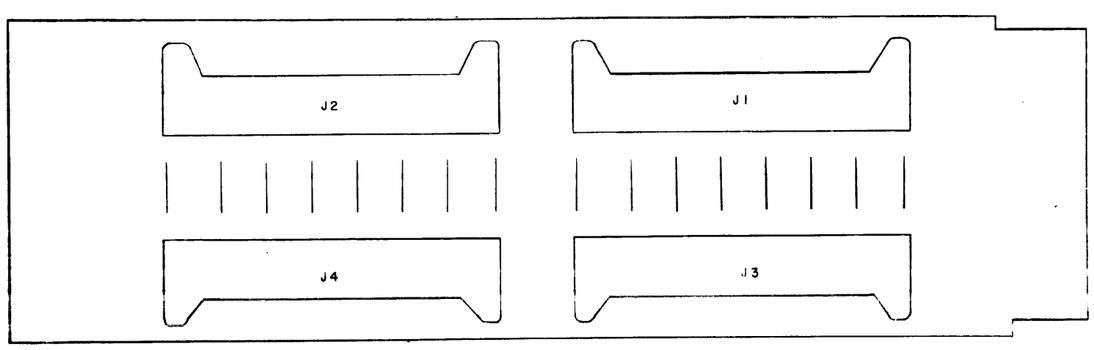

QTY.	REF. DESIGNATION	DESCRIPTION	DEC PART NO.	ITEM NO.
4		CONN. [illegible]	1209961	5
		ETCHED CIRCUIT BOARD	5009746	4
		MODULE ECO HISTORY	B-M61-H861-0-6	3
		ASSY/DRILLING HOLE LAYOUT	J-AN-H861-0-5	2
		X-Y COORDINATE HOLE LOCATION	K-CO-H861-0-4	1
	PARTS LIST			

REVISIONS	CHG NO	REV

DRN S. Cooper DATE 3/27/71
CHKD [illegible] DATE 4-71
ENG [illegible] DATE 12-22-71
PROD DATE 11-71

TRANSISTOR & DIODE CONVERSION CHART

DEC	EIA	DEC	EIA

[redacted]
EQUIPMENT CORPORATION
MAYNARD, MASSACHUSETTS

TITLE DM 11-BB TEST CONNECTOR

SIZE D CODE CS NUMBER H861-0-1 REV B
PRINTED CIRCUIT REV. C

SIZE D CODE CS NUMBER H861-0-1 REV B

SIZE D CODE CS NUMBER H861-0-1 REV B

DEC FORM NO. DED 110

"THIS DRAWING AND SPECIFICATIONS, HEREIN, ARE THE PROPERTY OF DIGITAL EQUIPMENT CORPORATION AND SHALL NOT BE REPRODUCED OR COPIED OR USED IN WHOLE OR IN PART AS THE BASIS FOR THE MANUFACTURE OR SALE OF ITEMS WITHOUT WRITTEN PERMISSION.
COPYRIGHT © 1974, DIGITAL EQUIPMENT CORPORATION"

DO NOT SCALE DRAWING

WIRE TABLE

ITEM	DESCRIPTION		FROM		TO	
NO.	AWG	COLOR	CONN	WITH	CONN	WITH
1	22	BLK	J1 – A	2	J1 – W	2
↕	↕	↕	J1 – C	↕	J1 – Y	↕
↕	↕	↕	J1 – E	↕	J1 – AA	↕
↕	↕	↕	J1 – H	↕	J1 – CC	↕
↕	↕	↕	J1 – L	↕	J1 – FF	↕
↕	↕	↕	J1 – N	↕	J1 – JJ	↕
↕	↕	↕	J1 – R	↕	J1 – LL	↕
1	22	BLK	J1 – T	2	J1 – NN	2

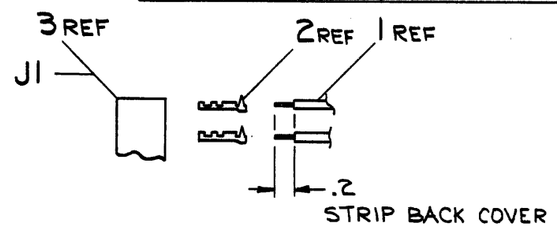

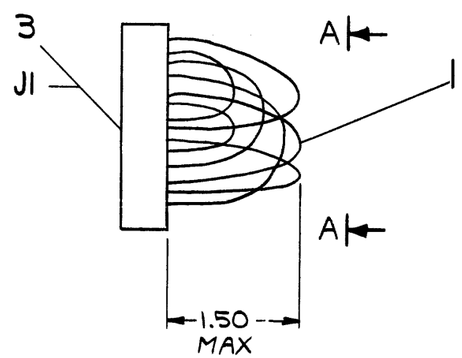

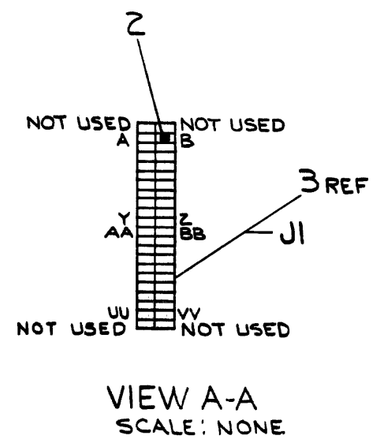

VIEW A-A
SCALE: NONE

QTY.	DESCRIPTION	PART NO.	ITEM NO.
1	HOUSING, SOCKET	1210918-15	3
16	SOCKET, CRIMP	1210089-06	2
A/R	WIRE #22 AWG (BLK)	9107350-00	1

PARTS LIST

FIRST USED ON OPTION/MODEL	M5906
UNLESS OTHERWISE SPECIFIED DIMENSION IN INCHES	TOLERANCES: DECIMALS .xxx = .005, .xx = .02, .x = .1; ANGLES ±0° 30'
REMOVE BURRS AND BREAK SHARP CORNERS SURFACE QUALITY √	
MATERIAL	SEE PARTS LIST
FINISH	—
DRN.	D. Sullivan, DATE 5/14/74
CHK'D	R. Borsay, DATE 7/17/74
ENG.	Bon & Robb, DATE 14 JUN 74
PROJ. ENG.	Jim & Kent, DATE 11 JUN 74
PROD.	R. Wall, DATE 7-17-74
NEXT HIGHER ASSY.	—
SCALE	—
SHEET	1 OF 1

digital EQUIPMENT CORPORATION
MAYNARD MASSACHUSETTS

TITLE CONN, DATA TURN AROUND

SIZE	CODE	NUMBER	REV.
C	UA	H8611-Ø-Ø	

DIST.

REV.	CHANGE NO.	CHK

REVISIONS

DEC FORM NO. DRC 100-B

SIZE C CODE UA NUMBER H8611-Ø-Ø REV.

This drawing and specifications, herein, are the property of Digital Equipment Corporation and shall not be reproduced or copied or used in whole or in part as the basis for the manufacture or sale of items without written permission.

DIGITAL EQUIPMENT CORPORATION
MAYNARD, MASSACHUSETTS

ENGINEERING SPECIFICATION DATE Aug. 6,1975

TITLE Installation of Additional DH11 Clocks

REVISIONS

REV	DESCRIPTION	CHG NO	ORIG	DATE	APPD BY	DATE
—	ORIGINATED	DH11-00010	J. MONAMARA	22-OCT-75	—	—

ENG	APPD	SIZE	CODE	NUMBER	REV
9-3-75	9-3-75	A	SP	DH11-Ø-17	—

DEC 16-(302)-1079-N971
DRA 107

ENGINEERING SPECIFICATION CONTINUATION SHEET

TITLE Installation of Additional DH11 Clocks

I. Scope:

This procedure outlines the correct method for installation of clocks appropriate to baud rates not normally supplied by the M4540 clock in the DH11. These additional clocks are referred to as "external clocks". Up to two external clocks, designated as "External A" and "External B" may be installed in a DH11. Clock pulse width must exceed 3 usec.

II. Procedure:

Install the appropriate module in the appropriate slot in accordance with the table below:

Baud rate for External A is 40-110 baud: Place M401-YA in BØ9.
Baud rate for External A is 312-8000 baud: Place M4050-YA in EØ9.

Baud rate for External B is 40-110 baud: Place M401-YA in BØ6.
Baud rate for External B is 312-8000 baud: Place M4050-YA in BØ6.

Remove grounds at F08K2 and F08R2 by doing the following:

Delete	E08T1 - F08C2	(level 2)
	F08K2 - F08R2	(level 2)
	F08T1 - F08V1	(level 2)
	F08C2 - F08K2	(level 1)
	F08R2 - F08T1	(level 1)
Add	F08C2 - F08T1	(level 1)
	E08T1 - F08C2	(level 2)
	F08T1 - F08V1	(level 2)

Install a backplane wire from EØ9E2 to FØ8K2. (Ext A Baud H)
Install a backplane wire from BØ6E2 to FØ8R2. (Ext B Baud H)

If the module that has been installed in a slot is an M401-YA, install a backplane wire from J2 to K2 and from K2 to T1. This provides the necessary enable. In addition, install a backplane wire from N2 to P2. This selects the timing range.

III. Adjustments:

The M4050-YA is crystal controlled, with the crystal selected to operate at a frequency 16 times the desired baud rate. Referring to the M4050-YA or M4050 schematic cut the W jumpers as indicated. No further adjustments are necessary.

The M401-YA is an RC controlled oscillator, with the operating frequency selected to be 16 times the desired baud rate. Adjust R8 potentiometer to obtain the desired frequency.

SIZE	CODE	NUMBER	REV
A	SP	DH11-Ø-17	—

DEC FORM NO DEC 16-(301)-1022-N370
DRA 108

ENGINEERING SPECIFICATION CONTINUATION SHEET

TITLE Installation of Additional DH11 Clocks

IV. Parts Substitutions:

An M401-YA may be created from an M401 by replacing 82 mmf capacitor C2 with a 0.01 mf disc ceramic (10-01610-01), and tagging the module appropriately.

An M4050-YA may be created from an M4050 by replacing C6, a 39 pf capacitor with a 470 pf capacitor and replacing R6, a 3K resistor with a 12K resistor. The new parts are 10-00024 and 13-00488 respectively. Tag the handle to indicate that this module has been altered to M4050-YA.

An M405 may be used in place of an M4050-YA by installing a capacitor IN THE BACKPLANE between K2 and H2. Alternatively, the M405 could be converted to an M405-YA by replacing C6 (120 mmf) with another capacitor. In both the backplane capacitor and the C6 replacement case, a 0.01 mf disc ceramic (10-01610-01) will produce the appropriate pulse width (3 to 5 microseconds). If the substitution for C6 is made, tag the module to indicate this substitution.

V. Baud Rate, Frequency & Period

M401-YA (Pulse width approximately 4.4 microseconds)

40 Baud	640 Hz	1.6 millisecond period
110 Baud	1760 Hz	568 microsecond period

M4050-YA (Pulse width approximately 4 microseconds)

312 Baud	5000 Hz	200 microsecond period
8000 Baud	128K Hz	7.4 microsecond period

SIZE	CODE	NUMBER	REV
A	SP	DH11-Ø-17	—

DEC FORM NO DEC 16-(301)-1022-N370
DRA 108

This drawing and specifications, herein, are the property of Digital Equipment Corporation and shall not be reproduced or copied or used in whole or in part as the basis for the manufacture or sale of items without written permission. COPYRIGHT © 1973 DIGITAL EQUIPMENT CORPORATION

NOTES:

1. UNLESS OTHERWISE STATED RESISTANCE IS IN OHMS.
2. WHEN THE M5960 IS USED IN APPLICATIONS OVER 110 BAUD JUMPERS
   - W1-OUTPUT B1
   - W2-OUTPUT D1
   - W3-OUTPUT H1
   - W4-OUTPUT K1

   MUST BE CUT OUT FOR THAT LINE.

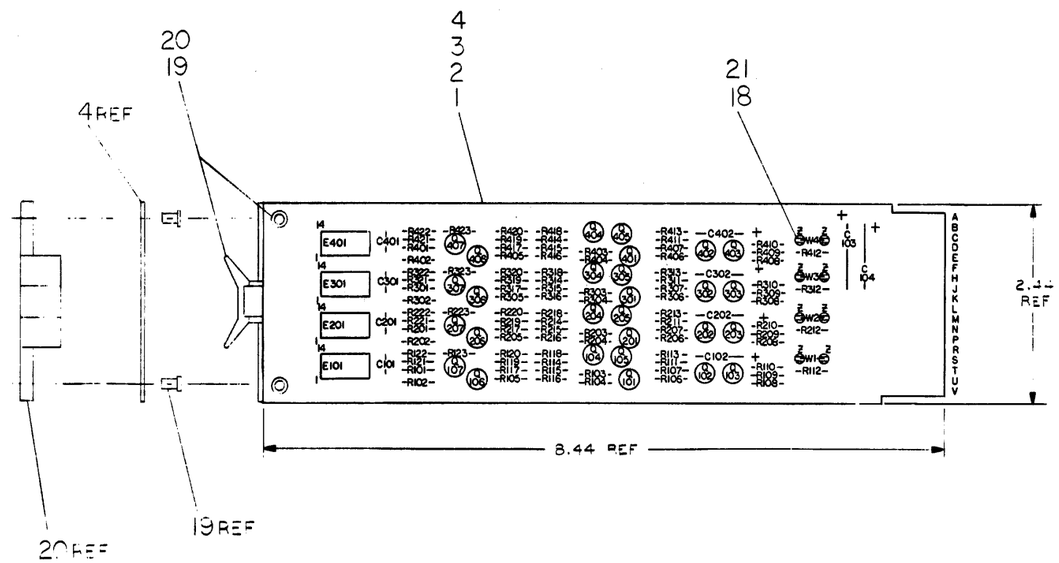

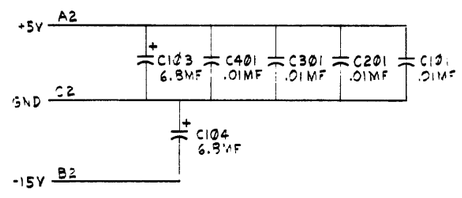

REF				
REF		X-Y COORDINATE HOLE LOCATION	K-CO-M5960-0-4	1
REF		ASSY/DRILLING HOLE LAYOUT	D-AM-M5960-0-5	2
REF		MODULE ECO HISTORY	B-MM-M5960-0-6	3
1		ETCHED CIRCUIT BOARD	5010627	4
4	C101,C201,C301,C401	CAP .01 MF 100V 20% DISC	1001810-01	5
4	C102,C202,C302,C402	CAP 2.2 MF 35V 10% TANT	1002431	6
2	C103,C104	CAP 6.8 MF 35V 10% TANT	1005306	7
24	R108-R113,R208-R213,R308-R313,R408-R413	RES 47 OHMS 1/4W 5%	1300202	8
8	R117,R118,R217,R218,R317,R318,R417,R418	RES 68 OHMS 1/4W 5%	1300219	9
8	R106,R107,R206,R207 R306,R307,R406,R407	RES 150 OHMS 1/4W 5%	1300250	10
28	R102,R103,R105,R114,R116,R119,R120,R202,R203,R205,R214,R216,R219,R220,R302,R303,R305,R314,R316,R319,R320,R402,R403,R405,R414,R416,R419,R420	RES 1K OHMS 1/4W 5%	1300365	11
8	R101,R104,R201,R204,R301,R304,R401,R404	RES 3K OHMS 1/4W 5%	1300432	12
4	R123,R223,R323,R423	RES 15K OHMS 1/4W 5%	1300496	13
12	R115,R121,R122,R215,R221,R222,R315,R321,R322,R415,R421,R422	RES 5.6K OHMS 1/4W 5%	1301074	14
12	Q103,Q105,Q107,Q203,Q205,Q207,Q303,Q305,Q307,Q403,Q405,Q407	TRANS MPSA05	1510705	15
16	Q101,Q102,Q104,Q106,Q201,Q202,Q204,Q206,Q301,Q302,Q304,Q306,Q401,Q402,Q404,Q406	TRANS MPSA55	1510706	16
4	E101,E201,E301,E401,	I.C. DEC 11380	1911113	17
8		SPLIT LUG	9008735	18
2		EYELET	9008732	19
1		HANDLE FLIP CHIP (MAGENTA)	9008337-6	20
4	W1,W2,W3,W4	BUSS WIRE #22 AWG	9107560-01	21

PARTS LIST

QTY	REF DESIGNATION	DESCRIPTION	PART NO.	ITEM NO.

FIRST USED ON OPTION MODEL: DF

ETCH BOARD REV: B

DEC NO.	EIA NO.	DEC NO.	EIA NO.
		MPS A05	NA
		MPS A55	NA

SEMICONDUCTOR CONVERSION CHART

DEC 11380	1	8
IC TYPE	GND	+5V

GND AND 5V ARE USUALLY PIN 7 AND 14 RESPECTIVELY EXCEPTIONS ARE STATED ABOVE

IC PIN LOCATIONS

REV	CHANGE NO.	CHK
A		

REVISIONS

R. DIETER 4 Nov 75

M5960-00001

DR. ... ATED

DRN. R. Dieter DATE 10-2-73
CHK'D. DATE 10/10/73
ENG. DATE 10-2-73
PROJ. ENG. DATE 10-17-73
PROD. DATE 10-24-73

NEXT HIGHER ASSY

SCALE NONE
SHEET 1 OF 2

DIGITAL EQUIPMENT CORPORATION MAYNARD, MASSACHUSETTS

TITLE: 20 MA TO TTL CONVERTER

SIZE D CODE CS NUMBER M5960-0-1 REV. B

DIST.

DEC FORM NO. DRD-135A

BRUNING 40-522 16699

"THIS DRAWING AND SPECIFICATIONS, HEREIN, ARE THE PROPERTY OF DIGITAL EQUIPMENT CORPORATION AND SHALL NOT BE REPRODUCED OR COPIED OR USED IN WHOLE OR IN PART AS THE BASIS FOR THE MANUFACTURE OR SALE OF ITEMS WITHOUT WRITTEN PERMISSION
COPYRIGHT © 1973, DIGITAL EQUIPMENT CORPORATION"

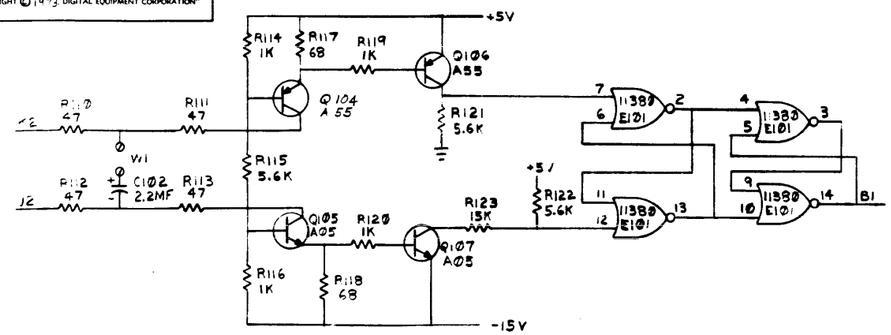

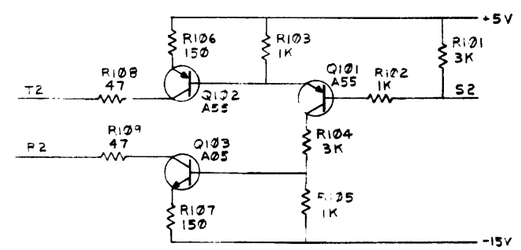

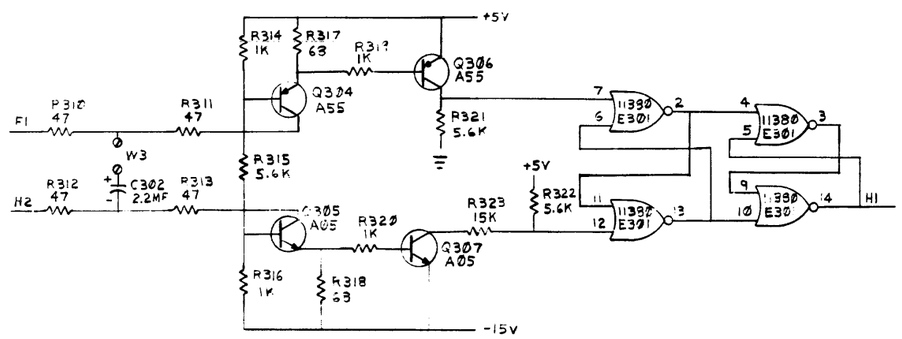

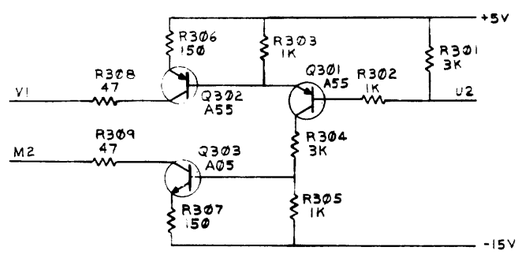

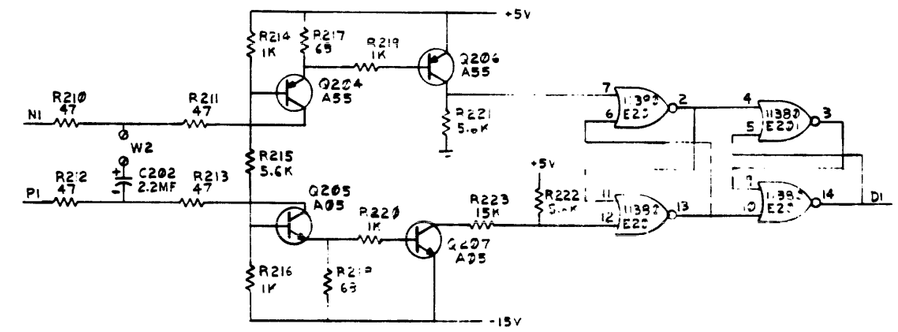

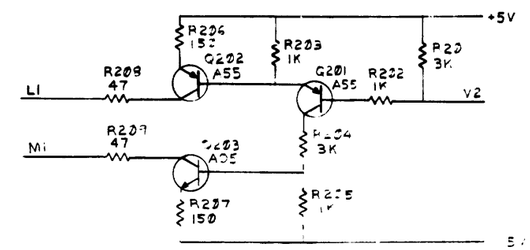

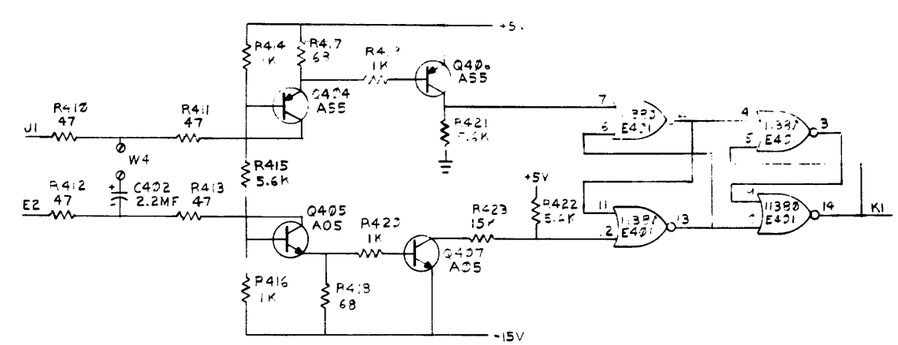

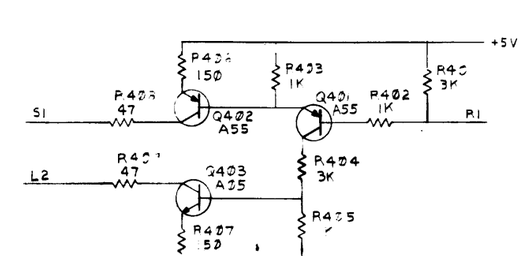

REVISIONS		
CHK	CHANGE NO	REV.

TITLE	SIZE	CODE	NUMBER	REV.
20 MA TO TTL CONVERTER	D	CS	M5960-0-1	B
SCALE —	SHEET 2 OF 2	DIST.		

DEC FORM NO DRO 138

D CS M5960-0-1 B

The drawing and specifications, herein, are the property of Digital Equipment Corporation and shall not be reproduced or copied or used in whole or in part as the basis for the manufacture or sale of items without written permission

NOTES:

1. UNLESS OTHERWISE SPECIFIED:
   RESISTANCE IS IN OHMS
   CAPACITANCE IS IN PICOFARADS
2. C7 - C10 ARE MOUNTED ON NEXT HIGHER ASSEMBLY (H751).
3. INSTALL ITEM #37 (TRANSIPADS) UNDER Q5 + Q6.

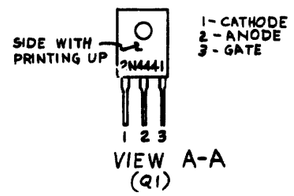

VIEW A-A
(Q1)

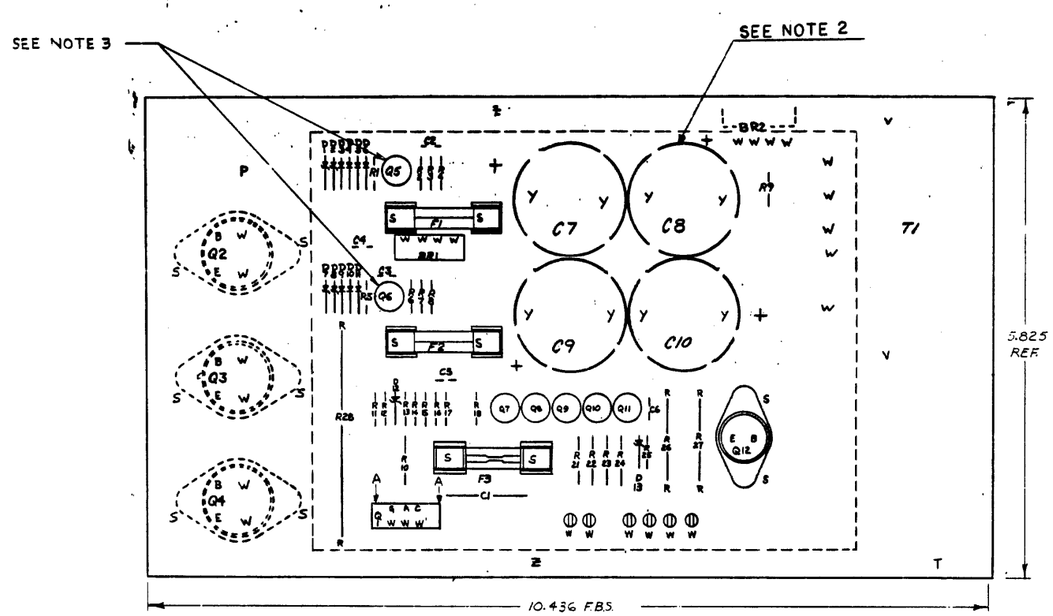

QTY	REF DESIGNATION	DESCRIPTION	PART NO.	ITEM NO.
2		TRANSIPADS #10134	90-07280	37
1	R28	RES .3 10 W 5% W.W.	13-09107	36
1	Q6	TRANS. DEC 3762	15-09649	35
1	Q5	TRANS. DEC. 3734	15-10062	34
5	Q7 THRU Q11	TRANS. DEC. 3009 B	15-03100	33
1	Q1	TRANS. 2N4441 SCR	15-05867	32
1	Q12	TRANS. 2N4912	15-09483	31
6	R2,R6,R9,R11,R12,R13	RES. 470 1/4W 5%	13-00316	30
1	R24	RES. 348 1/2W 1% MF	13-04858	29
2	R26,R27	RES. 100 2W 5%	13-02380	28
1	R10	RES. 82 1/2W 10%	13-00225	27
2	R15,R16	RES. 10K 1/4W 5%	13-00479	26
2	R3,R7	RES. 10 1/4W 5%	13-01317	25
2	R14,R28	RES. 4.7K 1/4W 5%	13-00447	24
1	R21	RES. 3.16K 1/8W 1% MF	13-03045	23
1	R23	RES. 1.96K 1/8W 1% MF	13-04833	22
1	R22	RES. 1.47K 1/8W 1% MF.	13-05108	21
6	R1,R4,R5,R8,R13,R17	RES. 1K 1/4W 5%	13-00365	20
1	BR1	DIODE ARRAY MDA-970-3	11-10208	19
5	D1,D2,D7,D8,D19	DIODE RZ1 1/4W 6.8V ZENER 1%	11-09991-1	18
1	D12	DIODE 1N752A 5.6V ZENER	11-02808	17
7	D3,THRU D6,D9,D10,D11	DIODE DG62	11-00113	16
				15
1	C1	CAP. 47UF, 20V, 10% S.TANT	10-04814	14
5	C2 THRU C6	CAP. .01UF, 100V 20% DISC	10-01610	13
6		SPLIT LUGS	90-06735	12
1	F3	FUSE 5 AMP	90-07221	11
2	F1, F2	FUSE 3 AMP	90-07217	10
6		FUSE CLIP	90-07203	9
6		EYELET	90-0900	8
2		FLAT WASHER	90-06655	7
2		KEPNUT #4-40	90-06557	6
2		SCREW, PAN HEAD, #4-40 X 5/16	90-06010-1	5
REF		MODULE ECO HISTORY	B-MH-5410131-0-6	4
REF		ASSY/DRILLING HOLE LAYOUT	E-AH-5410131-0-5	3
REF		X-Y COORDINATE HOLE LOCATION	K-CO-5410131-0-4	2
1		ETCHED CIRCUIT BOARD	5010130	1

PARTS LIST

IC TYPE	GND	+ 5V

This drawing and specifications, herein, are the property of Digital Equipment Corporation and shall not be reproduced or copied or used in whole or in part as a basis for the manufacture or sale of items without written permission.

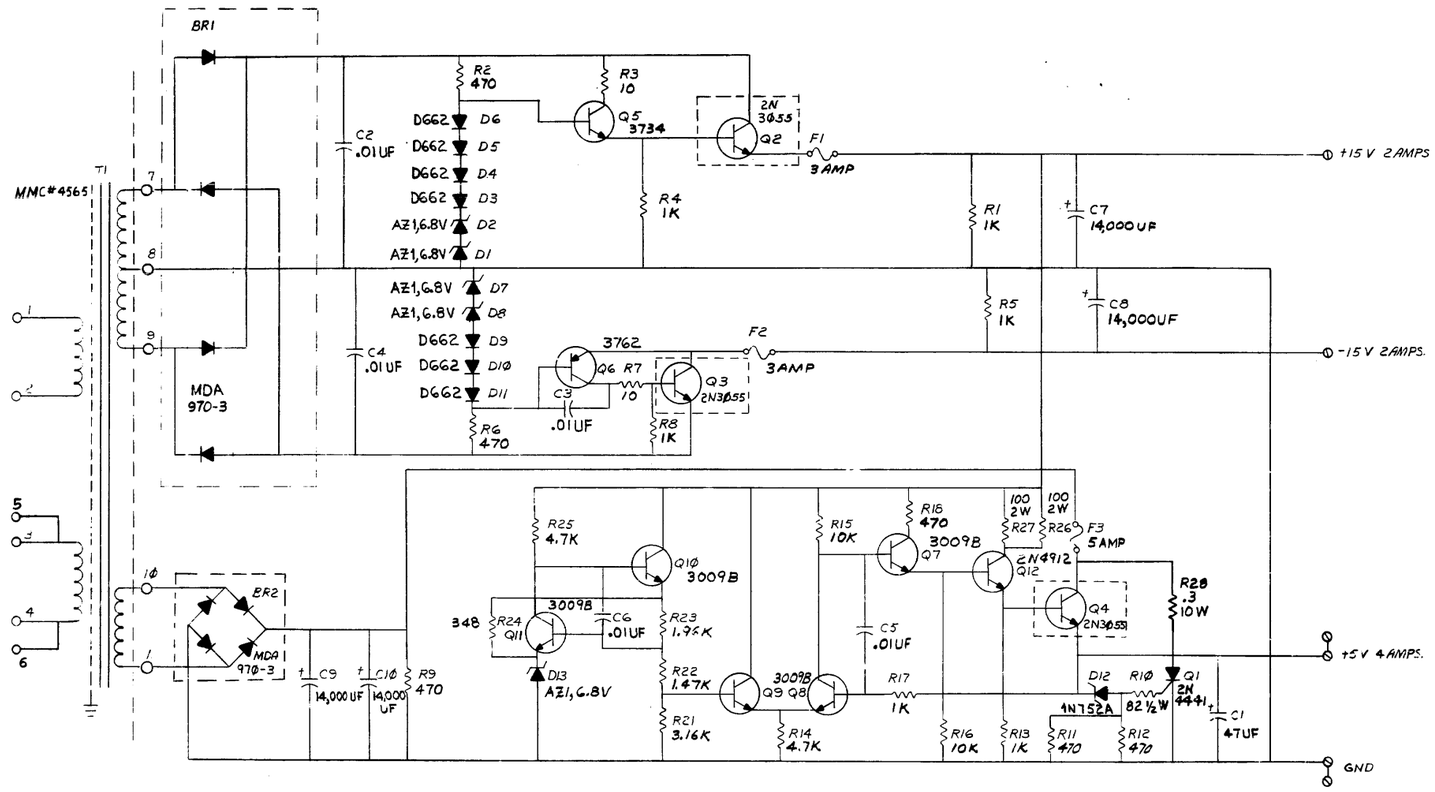

O INDICATES HOLES FOR DIODE BRIDGE
Q2, Q3, Q4, BR2 & T1 ARE MOUNTED ON CHASSIS/HEAT SINK

QTY	REF DESIGNATION	DESCRIPTION	PART NO.	ITEM NO.
		PARTS LIST		
	ETCH BOARD REV	C		

CHK	CHANGE NO.	REV
	REVISIONS	

DEC NO.	EIA NO.	DEC NO.	EIA NO.
SEMICONDUCTOR CONVERSION CHART			

DRN B. Manchester DATE 7-25-72
CHK Barry Moore DATE 7-26-72
ENG Jerry Nadler DATE 7-27-72
MFG Jerry Nadler DATE 7-27-72
MKT Ed DiMarco DATE 7-27-72
NEXT HIGHER ASSY
SCALE
SHEET 2 OF 2

EQUIPMENT CORPORATION
MAYNARD, MASSACHUSETTS

TITLE
CASSETTE POWER SUPPLY

DCS 5410131-0-1