ER-0RM03-MP-002

RM03 DISK DRIVE MAINTENANCE PRINT SET

This document reprinted with permission of Control Data Corporation.

digital equipment corporation • maynard, massachusetts

ER-0RM03-MP-002

RM03 DISK DRIVE MAINTENANCE PRINT SET

This document reprinted with permission of Control Data Corporation.

digital equipment corporation • maynard, massachusetts

83322680

CONTROL DATA CORPORATION

CDC® STORAGE MODULE DRIVE
BK5B5-G, H
BK5C1-C

DIAGRAMS
WIRE LISTS
MODULE LAYOUTS

HARDWARE MAINTENANCE MANUAL

REVISION RECORD

REVISION	DESCRIPTION
A	Manual released.
(6-30-77)	
B	Technical and editorial changes.
(11-7-77)	
C	Manual updated with ECO/FCO 55099. Technical and editorial changes.
(4-11-78)	
D	Manual updated to include ECO 55065B (Release BK5C1D).
(6-5-78)	
E	Manual updated with technical and editorial changes.
(9-20-78)	

KØR 0639

REVISION LETTERS I,O,Q AND X ARE NOT USED

© 1977, 1978
by Control Data Corporation
Printed in the United States of America

Address comments concerning this manual to:

Control Data Corporation
Technical Publications Dept.
7801 Computer Avenue
Minneapolis, Mn. 55435

or use Comment Sheet in the back of this manual.

LIST OF EFFECTIVE PAGES

Sheet 1 of 1

New features, as well as changes, deletions, and additions to information in this manual are indicated by bars in the margins or by a dot near the page number if the entire page is affected. A bar by the page number indicates pagination rather than content has changed.

PAGE	REV
Cover	-
Blank	-
Title P	-
ii	E
iii	E
Blank	-
v	D
Blank	-
vii	A
Blank	-
ix	A
Blank	-
S-1 Div	-
Blank	-
1-1	A
1-2	A
1-3	A
1-4	A
1-5	E
1-6	A
1-7	A
1-8	E
1-9	A
Blank	-
L-D Div	-
Blank	-
1-11	A
1-12	A
1-13	C
1-14	B
1-15	C
Blank	-
1-17	A
1-18	A
1-19	A
1-20	A
1-21	A
1-22	B
1-23	A
Blank	-
1-25	E
1-26	B
1-27	B
1-28	B
1-29	B
Blank	-
1-31	C
1-32	A

PAGE	REV
1-33	C
Blank	-
1-35	A
1-36	A
1-37	B
1-38	A
1-39	A
Blank	-
1-41	A
1-42	B
1-43	A
Blank	-
1-45	A
1-46	B
1-47	B
1-48	A
1-49	A
Blank	-
1-51	B
1-52	B
1-53	B
Blank	-
1-55	B
1-56	B
1-57	B
1-58	B
1-59	A
1-60	B
1-61	B
Blank	-
1-63	A
1-64	A
1-65	B
1-66	A
1-67	A
1-68	A
1-69	B
1-70	B
1-71	B
Blank	-
1-73	A
1-74	A
1-75	B
Blank	-
1-77	A
1-78	B
1-79	A
1-80	B

PAGE	REV
1-81	A
1-82	B
1-83	A
1-84	A
1-85	A
1-86	B
1-87	A
Blank	-
1-89	A
1-90	B
1-91	A
1-92	B
1-93	A
Blank	-
1-95	E
1-96	E
1-97	A
1-98	B
1-99	A
1-100	B
1-101	A
1-102	A
1-103	A
1-104	A
1-105	A
1-106	B
1-107	A
1-108	A
1-109	E
1-110	A
1-111	E
Blank	-
1-113	A
1-114	A
1-115	A
1-116	A
S-2 Div	-
Blank	-
2-1	A
2-2	A
2-3	A
2-4	A
2-5	A
2-6	A
2-7	A
2-8	A
2-9	A
2-10	A

PAGE	REV
2-11	A
2-12	A
2-13	A
2-14	A
2-15	A
2-16	A
2-17	A
Blank	-
Cmt Sht	-
Rtn Env	-
Blank	-
Cover	-

PAGE	REV

KØR-06118

PREFACE

This manual contains maintenance information applicable to the BK5B5G, BK5B5H, BK5C1C and BK5C1D Storage Module Drives (SMDs).

This manual provides the logic and wiring information relating to the SMDs. The manual assumes that the reader is already trained in the use of normal mechanical and electric repair equipment. In addition, the manual assumes that the reader has a working knowledge of the use and interpretation of logic.

Information in this manual is divided into two sections:

Section 1 - Diagrams

Section 2 - Wire Lists

Other manuals, also applicable to the SMDs covered in this manual, are as follows:

Publication Number	Title
83322660	Parts Data
83322690	Hardware Reference Manual - General Description, Operation, Theory of Operation, Key to Logic.
83322670	Logic Cards Manual - General Theory, Logic Symbology, Data Sheets.

CONTENTS

1. DIAGRAMS

Introduction 1-1

Diagram Conventions 1-1

- Symbology 1-1
- Abbreviations 1-1
- Logic Levels 1-1
- Signal Names 1-2
- Intersheet References 1-2
- Diagram Cover Sheets 1-4

Physical Description 1-5

Logic Diagram Sets 1-11

2. WIRE LISTS

Introduction 2-1

Reading Wire Lists

- Signal Name or Number Identification 2-1
- Origin/Destination 2-1
- Z Level 2-2
- Notes 2-2

Wire List 2-3

3. (There is no Section 3.)

4. Module Layouts

FIGURES

1-1	Electronic Component Assembly	1-2	1-4	Backpanel Layout	1-9
1-2	Intersheet Referencing	1-3	2-1	Example of Logic Wirewrap List	2-1
1-3	Physical Location Codes	1-8	2-2	Z Levels	2-2

TABLES

1-1	Logic Voltage Levels	1-2	1-2	Physical Location Codes	1-6

ABBREVIATIONS

ABR	Absolute Reserve
ABV	Above
ADDR	Address
ADRS	Address
AGC	Automatic Gain Control
AM	Address Mark
AMPL	Amplifier
BLK	Black
BLW	Below
CAR	Cylinder Address Register
CH	Channel
CHAN	Channel
CNTLGL	Centrifugal
CNTR	Counter
COMP	Compensation
CONFIG	Configuration
CONT	Continued
CR REF	Cross Reference
CYL	Cylinder
D/A	Digital To Analog
DCDR	Decoder
DIFF	Difference
DLY	Delay
DRVR	Driver
DSBL	Disable
ECL	Emitter Coupled Logic
ECO	Engineering Change Order
EMER	Emergency
EN	Enable
EOT	End Of Travel
EQUIP	Equipment
EQUIV	Equivalent
FCO	Field Change Order
FF	Flip Flop
FIG	Figure
FLT	Fault
FREQ	Frequency
FTU	Field Test Unit
FWD	Forward
GND	Ground
HD	Head
I/O	Input-Output
INTLK	Interlock
LD	Load
MAINT	Maintenance
MAX	Maximum
MB	Megabyte
MFM	Modified Frequency Modulation
MK	Mark
MULT	Multiple
NC	No Connection
NEG	Negative
NO	Number
NOM	Nominal
NORM	Normal
NRM	Normal
NRZ	Nonreturn To Zero
PC PT	Piece Part
PLO	Phase Lock Oscillator
PN	Part Number
POS	Positive
PWR	Power
RCVRS	Receivers
RD	Read
RDY	Ready
REC	Receiver
REF	Reference
REG	Register
REV	Reverse
RGTR	Register
RTM	Reserve Timer
RTZ	Return To Zero
S&IOBC	Sector and Index On B Cable
S/C	Series Code
SEC	Second
SEL	Select
SEQ	Sequence
SER	Servo
SH	Sheet
SOL	Solenoid
SR	Servo
SW	Switch
T	Track
TBS	To Be Supplied
TLA	Top Level Assembly
TP	Test Point
TRK	Track
TTL	Transistor Transistor Logic
UNREG	Unregulated
VCO	Voltage Controlled Oscillator
W+R	Write Or Read
W•R	Write and Read
W/	With
W/O	Without
WRT	Write
WT	White
XDUCER	Transducer
XMTR	Transmitter

SECTION 1

DIAGRAMS

DIAGRAMS 1

INTRODUCTION

Section 1 is divided into three areas: diagram conventions, physical descriptions, and diagrams. The discussion on diagram conventions describes the elements included in the logic, and how to use the logic. The discussion on physical description identifies the functional elements on the drive and references them to the appropriate diagrams. The logic diagrams show how the drive functions.

DIAGRAM CONVENTIONS

The conventions used in the logic diagrams are:

- Symbology
- Abbreviations
- Logic Levels
- Signal Names
- Intersheet Rererences
- Diagram Cover Sheets

An explanation of each of the above is included in the following paragraphs.

SYMBOLOGY

The logic diagrams consist of MIL STD 806-B/C symbols for each of the microcircuit elements that make up the various logic networks in the drive. When discrete components are used to implement a function (or portion thereof) for which no microcircuit exists, the components (resistors, transistors, etc.) are shown in the diagrams.

Typically, a logic symbol contains three kinds of information:

1. Function (name)
2. CDC element identifier
3. Physical location code

The function name is usually omitted from distinctive shaped symbols (AND, OR, XOR, inverter, etc.). The function and the element identifier serve to define the element type. Refer to the Logic Cards manual for a detailed description of the functions and identifiers associated with each microcircuit. The following discussion defines physical location codes. Refer to figure 1-1 to assist in understanding the discussion on physical location codes.

The physical location code is in the form of a two digit or a three digit code. The first two digits indicate the location of the microcircuit in relation to its position on the card. Each plug-in logic module, or printed-circuit card, has implicit locations for 20 microcircuit elements. The exact location of microcircuit can be found as follows: with the component side of the card up and the card connector to the right, form an imaginary grid on the card. Divide the card into five equal rows (using horizontal lines), and four equal columns (using vertical lines). Label the five rows A through E on the left hand side of the card, and number the columns 1 through 4 on the top of the card. To find a microcircuit location, intersect the rows and the columns as indicated by the physical location code. As shown in figure 1-1, the element at location B4 can be located by intersecting row B with column 4. When an entire element is not devoted to a single function, a third character may appear in the location code. A third character serves to distinguish the intended gate (or section) from others on the same chip.

ABBREVIATIONS

Abbreviations are used in the logic diagram when it is impractical or impossible to use complete nomenclature on logic diagrams. Standard abbreviations from ANSI Y1.1 were used when possible. Refer to the list of abbreviations included in the front matter for definitions of all abbreviations used in the manual.

LOGIC LEVELS

Two types of logic are used in the drives covered by this manual: TTL logic, and ECL logic. Logic voltage levels for both types are given in the table 1-1. Different circuit configurations, temperatures, and so on may result in legitimate readings that fall outside of the typical range. Such readings, however, should be suspect only in the event of trouble.

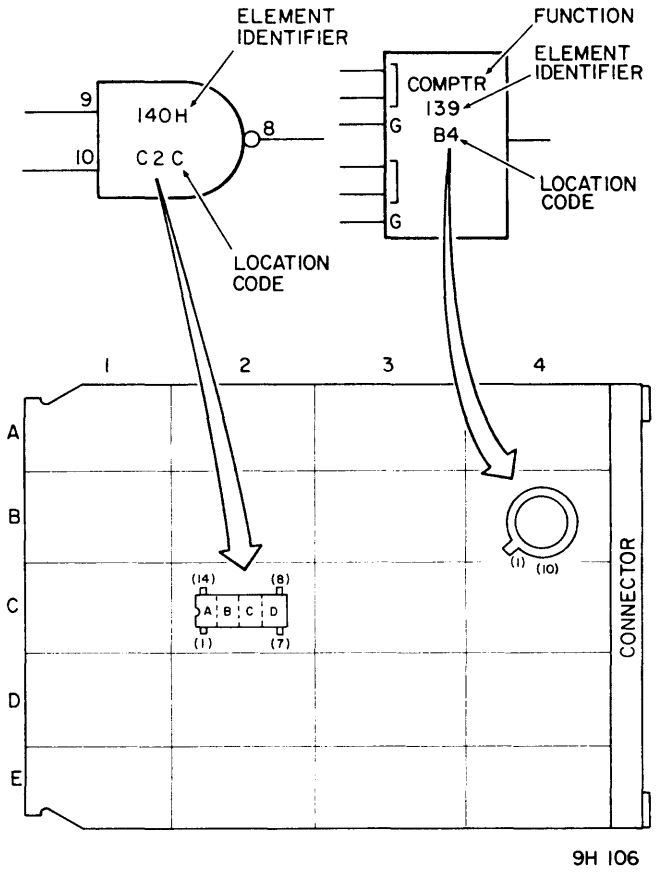

Figure 1-1. Identifying Element Locations on a Logic Module

SIGNAL NAMES

All input-output signals are labeled to reflect their particular function. If an output signal has no connection, and therefore no function, it will be labeled "NC" to indicate no connection. The polarity of a signal is identified by a plus or minus sign before the signal name. A plus sign before a signal name indicates that the signal is active when the logic level is high, or in a logical 1's state. A minus sign before a signal name indicates that the signal is active when the logic level is low, or in a logical 0's state. Refer to the discussion on logic levels.

INTERSHEET REFERENCES

There are 27 sets of logic preceded by a functional introduction. The key to understanding how each set relates to another is in identifying three basic components. Each set contains cross-reference numbers, physical location codes, and pin numbers (see figure 1-2). The cross-reference number is a three digit, two part number. The first part (first two digits) indicates which set is being referenced. The second part (third digit) indicates which page of the set is being referenced. For example, in reference number 131, the first two digits indicate that set 13 is being referenced. The third

TABLE 1-1. LOGIC VOLTAGE LEVELS

Logical State	Nominal Voltage	Typical Range
TTL "1"	+3 V	+2.5 V to +4.0 V *
TTL "0"	0 V	0 V to +0.9 V
ECL "1"	-0.9 V	-0.61 V to -0.97 V
ECL "0"	-1.8 V	-1.52 V to -2.38 V

* Measuring a TTL open collector voltage may result in a reading that is close to the actual power supply voltage.

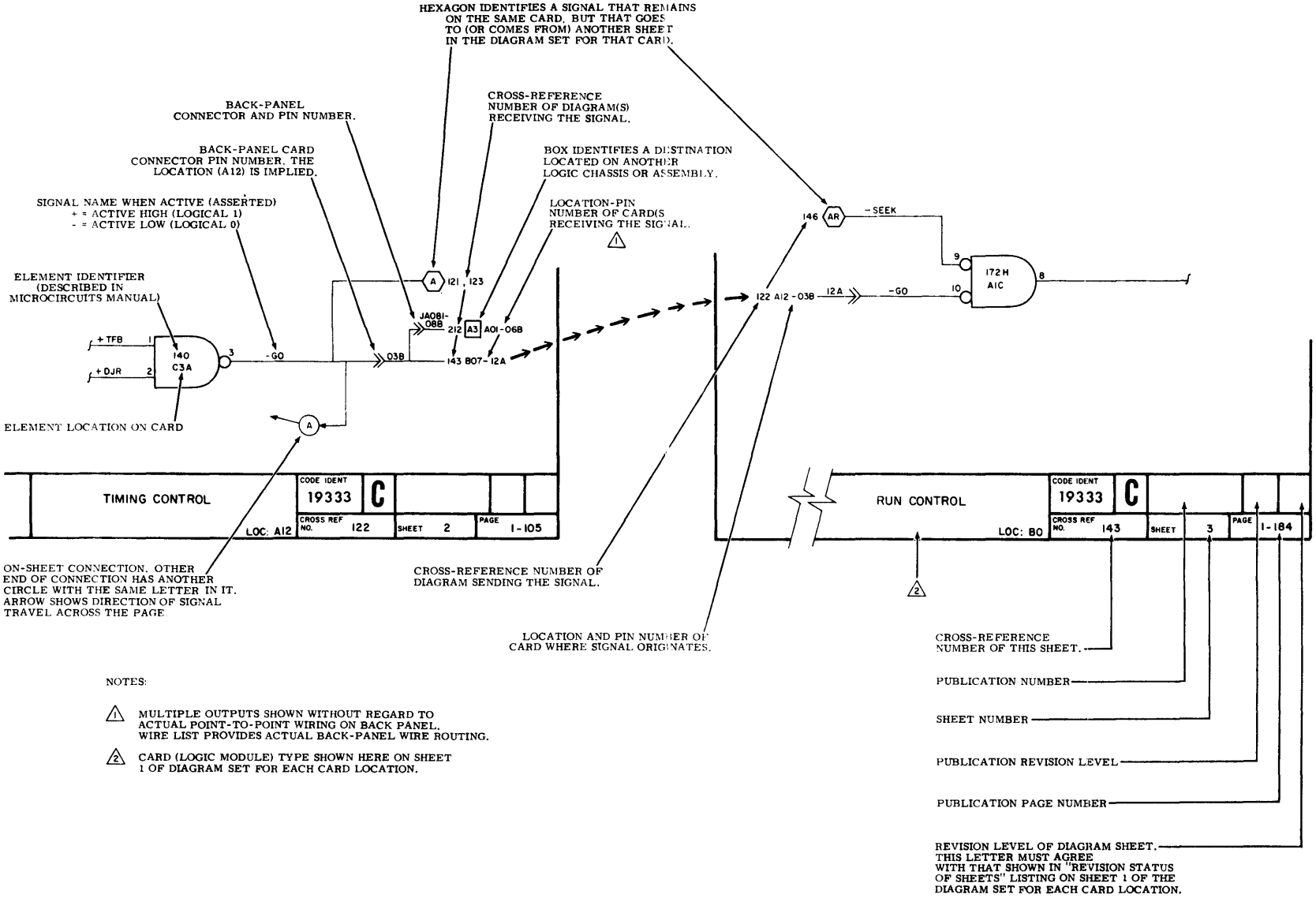

Figure 1-2. Intersheet Referencing

digit indicates that page 1 of set 13 is being referenced. Cross-reference numbers are also used within the logic, so that logic can be traced from one logic set to another. A cross-reference number on the output of a logic signal indicates that the logical sequence continues in the logic set identified by the cross-reference number. Typically, other identifying information, such as the physical location code, or the pin number will follow the cross-reference number on the logic. A cross-reference number on the input of a signal indicates the origin of the signal. Where a logic signal does not leave the logic, but is continued on some other sheet of the same set, the cross-reference number of the destination sheet will be shown. In such cases, the cross-reference number will be preceded by a hexagon. The hexagon will be identified with a letter to indicate a specific location on the destination sheet. Where a logical sequence cannot be shown in series and it does not leave the logic sheet, "line of sight" arrows are used to indicate the origin and destination of the sequence. The end of a logical sequence will be shown with a line of sight arrow pointing away from a small circle identified with a letter. A second circle, identified with the same letter, will have a line of sight arrow pointing in the same direction as the first. The second arrow indicates where the logical sequence continues.

The physical location code is an alpha-numerical code, sucn as A2A05, that identifies the relationship between the logic sets and their location on the drive. All physical location codes are represented in the logic. However, several miscellaneous codes that do not warrant their own logic set are shown in a related logic set. For example, A3L2 (shown on cross-reference sheet 072) is not shown in the A3 logic set. A3L2 is shown with A2 logic, since A2 is more closely related. Refer to the table and figure on physical location codes to locate particular physical location codes.

The pin numbers used in the logic are for identifying logic signals at their respective input-output locations. Pin numbers are identified by a three character number, such as 14A. The tagging information on all input-output signals should reflect a reference number, a physical location code, and a pin number, respectively.

Logic set 34X contains the cabling information for all inter-chassis logic signals on logic sets 01X through 33X. Inter-chassis connections are designated by a small square identified with a location code, such as A3. An inter-chassis designator used at the output of a logic signal indicates that the signal leaves the assembly shown, and continues on the assembly indicated by the indicator. An inter-chassis designator at the input of the logic signal indicates that the signal originated on the assembly shown by the designator. When it becomes necessary to view the cabling in its entirety, refer to logic set 34X. Logic set 34X shows only the various cables and connectors as used in the drive. All logic chassis backpanel wiring is shown in the wirelist.

DIAGRAM COVER SHEETS

The diagram cover sneet is the first sheet of a logic set. Power and ground connections, revision status, card type information, and a list of unused circuit elements are found on the cover sheet. Power enters the drive from the Drive Power Plug (P1 on reference sheet 302), is rectified (refer to reference sheets 31X, 32X, and 33X), and then distributed to the backpanel fastons. The backpanel then distributes power to the logic cards. The cover sheets show which pins receive that power. All power connections show the point of origin for the power source except those that are most common. The most common power connections are:

- -20V faston, which feeds pin 2B on cards A01-A09
- +20V faston, which feeds pin 33B on cards A01-A09
- -5V faston, which feeds pin 1B on all cards
- +5V faston, which feeds pin 34B on all cards
- GND faston, which feeds pins 1A and 34A on all cards

The revision of each logic sheet within the logic set is shown in the upper left-hand corner of the cover sheet. The upper right-hand corner of the sheet contains a record of the changes made to the logic set. The latest revision letter shown in the revision record should always match the letter of the cover sheet.

The cover sheet also shows the card type which appears in the title block below the card name. Refer to figure 1-2 for an explanation of all pertinent information shown in the title block.

PHYSICAL DESCRIPTION

The physical arrangement of the drive is described on figures 1-3 through 1-5, and table 1-2. Figure 1-3 separates the drive into three sections. Each section and its assemblies and components have been assigned a physical location code. All physical location codes shown on figure 1-3 are listed in table 1-2. Table 1-2 identifies the physical location code by title, and refers to the logic set in which the code is shown. The drive backpanel is shown on figure 1-4. The view shown is the wired side of the backpanel. The relative position of the backpanel, and all other card assemblies in the drive, is shown on the chassis (see figure 1-5).

TABLE 1-2. PHYSICAL LOCATION CODES

PHYSICAL LOCATION CODE	TITLE	CROSS REFERENCE NUMBERS
A1	Base Assembly (AC Power System)	302
A1A01	Plus and Minus 42V Supply and Emergency Retract	31X
A1A02	Plus and Minus, Plus and Minus 12V Supplies	32X
A1A03	Plus and Minus 5V Supply	33X
A1BM1	Blower Motor	302
A1C1	Servo Capacitor (+)	312
A1C2	Servo Capacitor (-)	312
A1C5	Blower Motor Start Capacitor	302
A1C8	Transformer Tuning Capacitor	302
A1CB1	AC Power Circuit Breaker	302
A1CB2	Power Supply Circuit Breaker	302
A1FL1	Line Filter	302
A1K1	Run Triac	302
A1K2	Emergency Retract Relay	312
A1M1	Elapsed Time Meter	302
A1S4	Deck Interlock Switch	302
A1T1	AC Power Transformer	302
A1TB1	Terminal Board	302
A1J1A	Power Supply Connector	31X-33X
A1J1B	Power Supply Connector	31X-33X
A1J100	Power Supply Connector	31X-33X
A1P1	AC Power Connector	302
A2	Logic Chassis	--

Table continued on next page

TABLE 1-2. PHYSICAL LOCATION CODES (Contd)

PHYSICAL LOCATION CODE	TITLE	CROSS REFERENCE NUMBERS
A2A01	Write Clock (806 kHz)	01X
A2A02	FTU/Head Alignment Card Slot	02X
A2A03	Fine Servo Decoder	03X
A2A04	Fault Card	04X
A2A05	Data Latch	05X
A2A06	Read PLO	06X
A2A07	D/A Function Generator	07X
A2A08	Access Control NO 2	08X
A2A09	Switching Mode Control	09X
A2A10	Interlocks and Speed Detector	10X
A2B01	Transmitters and Receivers Head Address Register	11X
A2B02	Receivers	12X
A2B03		13X
A2B04		14X
A2B05		15X
A2B06	Difference Generator Controls	16X
A2B07	NRZ to Compensated MFM	17X
A2B08	Access Control and Index/Sector Decode	18X
A2B09	Access Control NO 1	19X
A2B10		20X
A2C1		21X
A2C2		22X
A2D1	I/O	23X
		24X
A3	Deck Assembly	--
A3A01	Control Panel	25X
A3A02	Head Select and Read Amplifier	26X
A3A03	Writer	27X
A3A04	Power Amplifier	28X
A3A05	Track Servo Preamplifier	29X
A3C6	Drive Motor Capacitor	302
A3DM1	Drive Motor	302

Table continued on next page

TABLE 1-2. PHYSICAL LOCATION CODES (Contd)

PHYSICAL LOCATION CODE	TITLE	CROSS REFERENCE NUMBERS
A3HB1	Hysteresis Brake	302
A3K5	Start Triac	302
A3L1	Speed Transducer	103
A3L2	Velocity Transducer	072
A3L3	Pack Cover Solenoid (Optional)	102
A3S2	Heads Loaded Switch	302
A3S3	Pack Cover Switch	252
A3VC1	Voice Coil	312

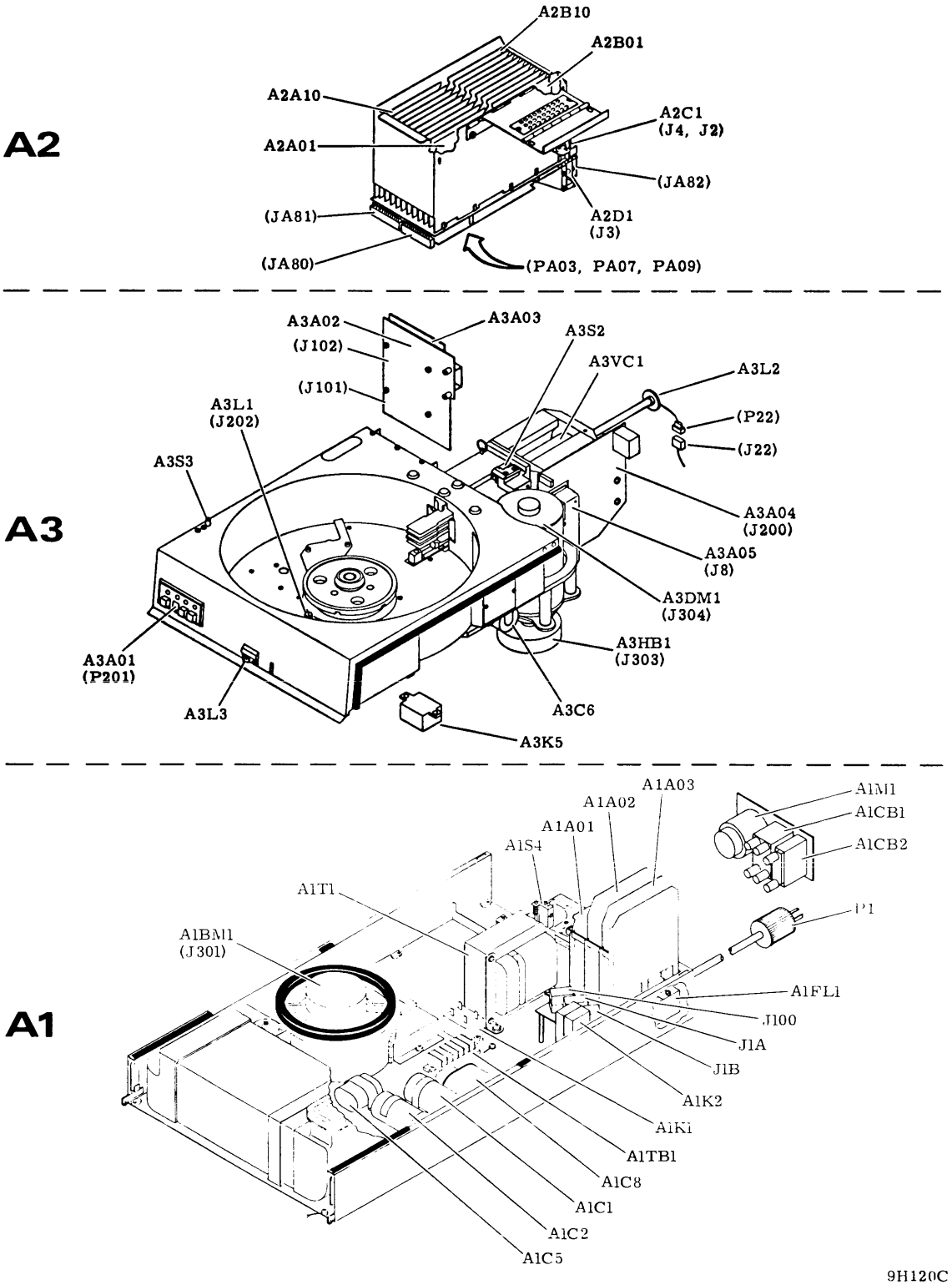

Figure 1-3. Physical Location Codes

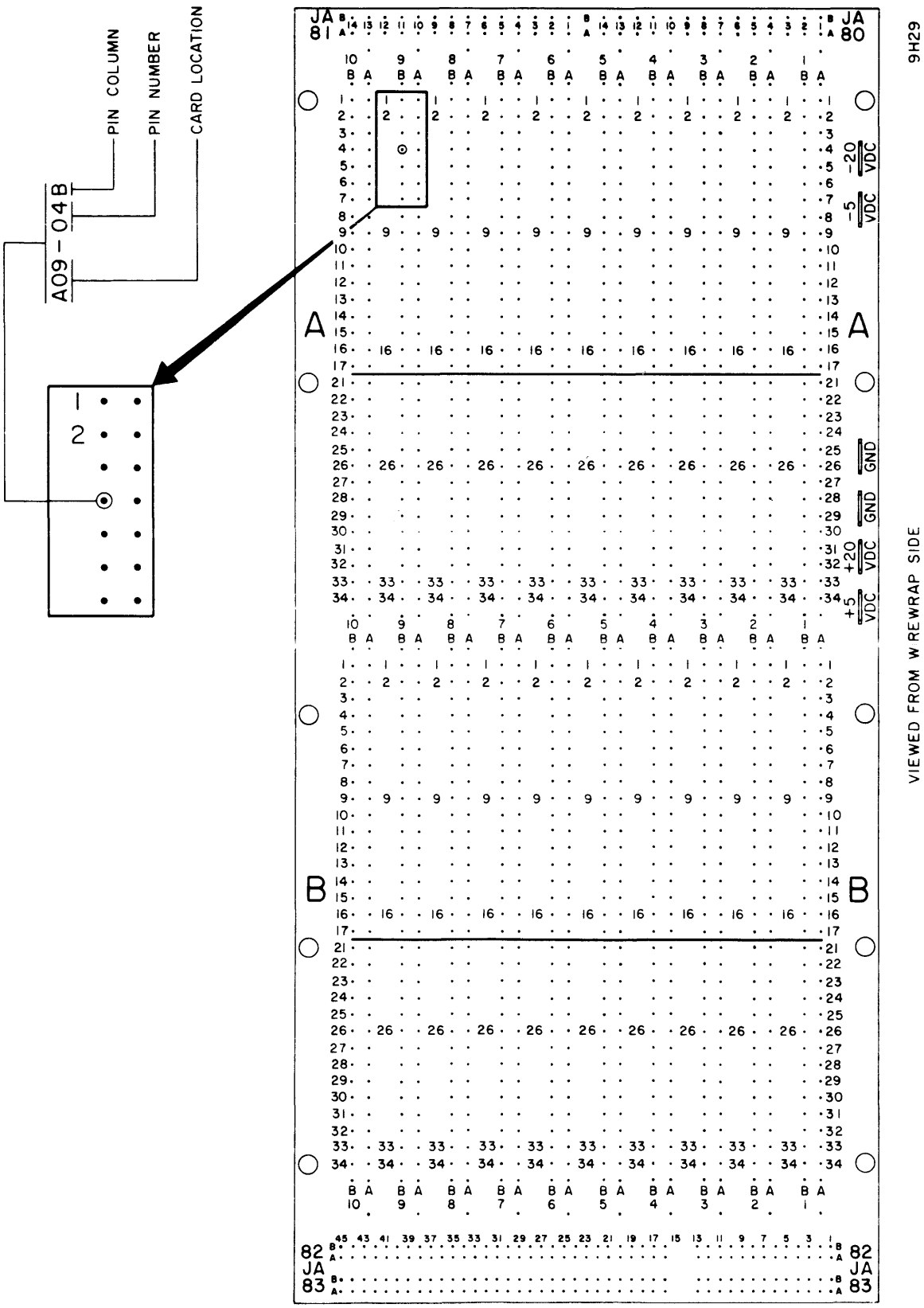

Figure 1-4. Backpanel Layout

LOGIC DIAGRAM SETS

REVISION STATUS OF SHEETS

1	2	3	4	5	6	7	8	9	10	11	12	13	14	15	16	17	18	19	20
A	A																		

REVISIONS

REV.	ECO.	DESCRIPTION	DRFT.	DATE	CHK'D
A	PE23000	RELEASED			

DRAWN	G. Rabine	3-14-77	CONTROL DATA	CHASSIS MAP DIAGRAMS	CODE IDENT 19333	C	83322680	A	A
CHECKED									
ENGINEER			NORMANDALE DIVISION		CROSS REF NO		SHEET 1 OF 2	PAGE 1-11	
APPROVED									

REF 83215700

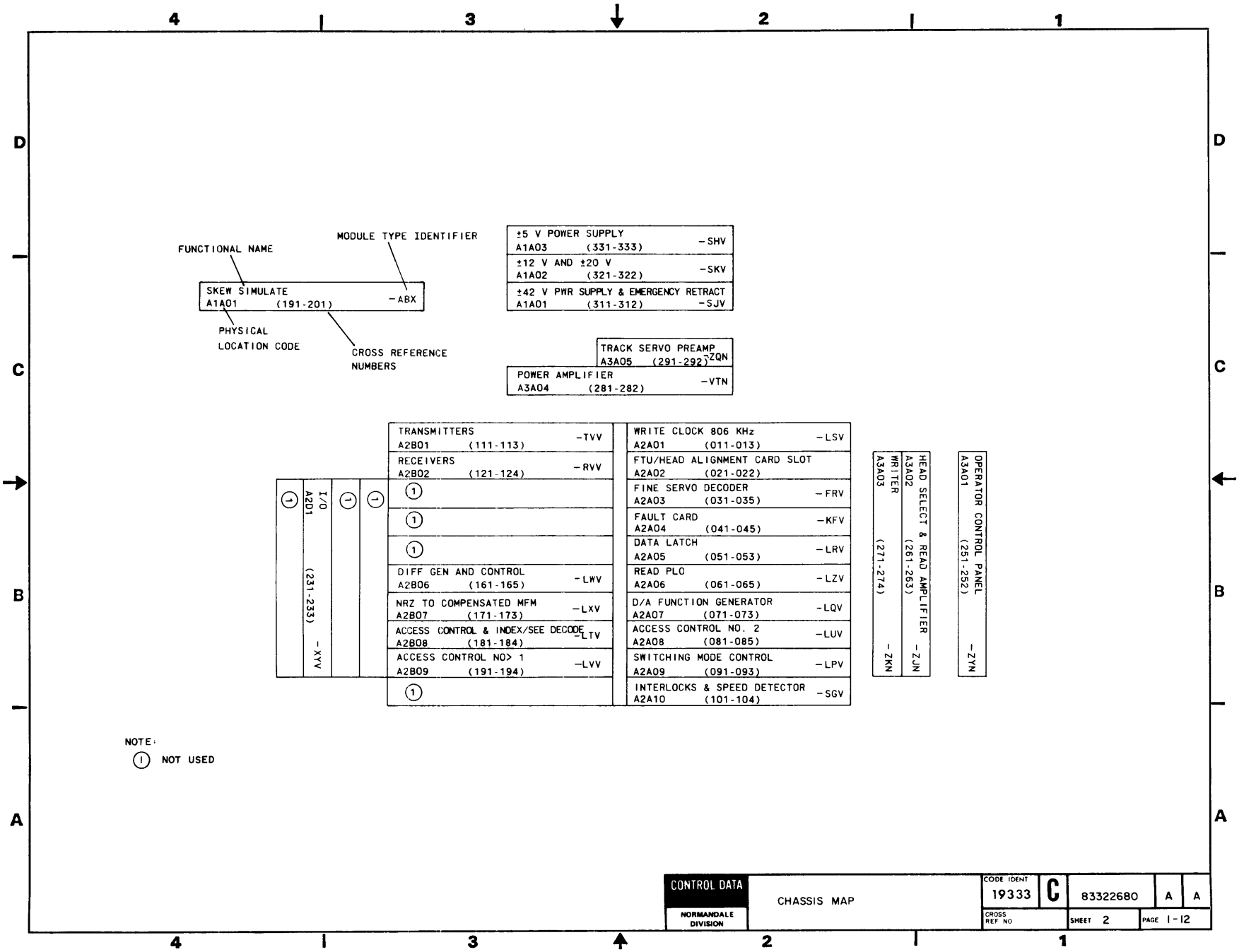
MODULE TYPE IDENTIFIER
FUNCTIONAL NAME
SKEW SIMULATE
A1A01 (191-201) -ABX
PHYSICAL LOCATION CODE
CROSS REFERENCE NUMBERS
±5 V POWER SUPPLY
A1A03 (331-333) -SHV
±12 V AND ±20 V
A1A02 (321-322) -SKV
±42 V PWR SUPPLY & EMERGENCY RETRACT
A1A01 (311-312) -SJV
TRACK SERVO PREAMP
A3A05 (291-292) -ZQN
POWER AMPLIFIER
A3A04 (281-282) -VTN
TRANSMITTERS
A2B01 (111-113) -TVV
RECEIVERS
A2B02 (121-124) -RVV
I/O
A2D1
(231-233) -XYV
DIFF GEN AND CONTROL
A2B06 (161-165) -LWV
NRZ TO COMPENSATED MFM
A2B07 (171-173) -LXV
ACCESS CONTROL & INDEX/SEE DECODE
A2B08 (181-184) -LTV
ACCESS CONTROL NO> 1
A2B09 (191-194) -LVV
WRITE CLOCK 806 KHz
A2A01 (011-013) -LSV
FTU/HEAD ALIGNMENT CARD SLOT
A2A02 (021-022)
FINE SERVO DECODER
A2A03 (031-035) -FRV
FAULT CARD
A2A04 (041-045) -KFV
DATA LATCH
A2A05 (051-053) -LRV
READ PLO
A2A06 (061-065) -LZV
D/A FUNCTION GENERATOR
A2A07 (071-073) -LQV
ACCESS CONTROL NO. 2
A2A08 (081-085) -LUV
SWITCHING MODE CONTROL
A2A09 (091-093) -LPV
INTERLOCKS & SPEED DETECTOR
A2A10 (101-104) -SGV
WRITER
A3A03 (271-274) -ZKN
HEAD SELECT & READ AMPLIFIER
A3A02 (261-263) -ZJN
OPERATOR CONTROL PANEL
A3A01 (251-252) -ZYN
NOTE:
(1) NOT USED
CONTROL DATA
NORMANDALE DIVISION
CHASSIS MAP
CODE IDENT 19333
C
83322680
A
A
CROSS REF NO
SHEET 2
PAGE 1-12

REVISION STATUS OF SHEETS

1	2	3	4	5	6	7	8	9	10	11	12	13	14	15	16	17	18	19	20
A	A	A																	
B	A	B																	

REVISIONS

REV.	ECO.	DESCRIPTION	DRFT.	DATE	CHK'D
A	PE23000	RELEASED			
B		TECHNICAL CHANGE	GR	4-4-78	

UNUSED LOGIC ELEMENTS

TYPE	LOCATION	OUTPUT PIN (S)
10131	C2	14,15
10131	D2	14,15
10116	B1	6,7,14,15
10116	D1	2,3,6,7
10125	D3	4,13
10125	B2	4
140H	D4	6

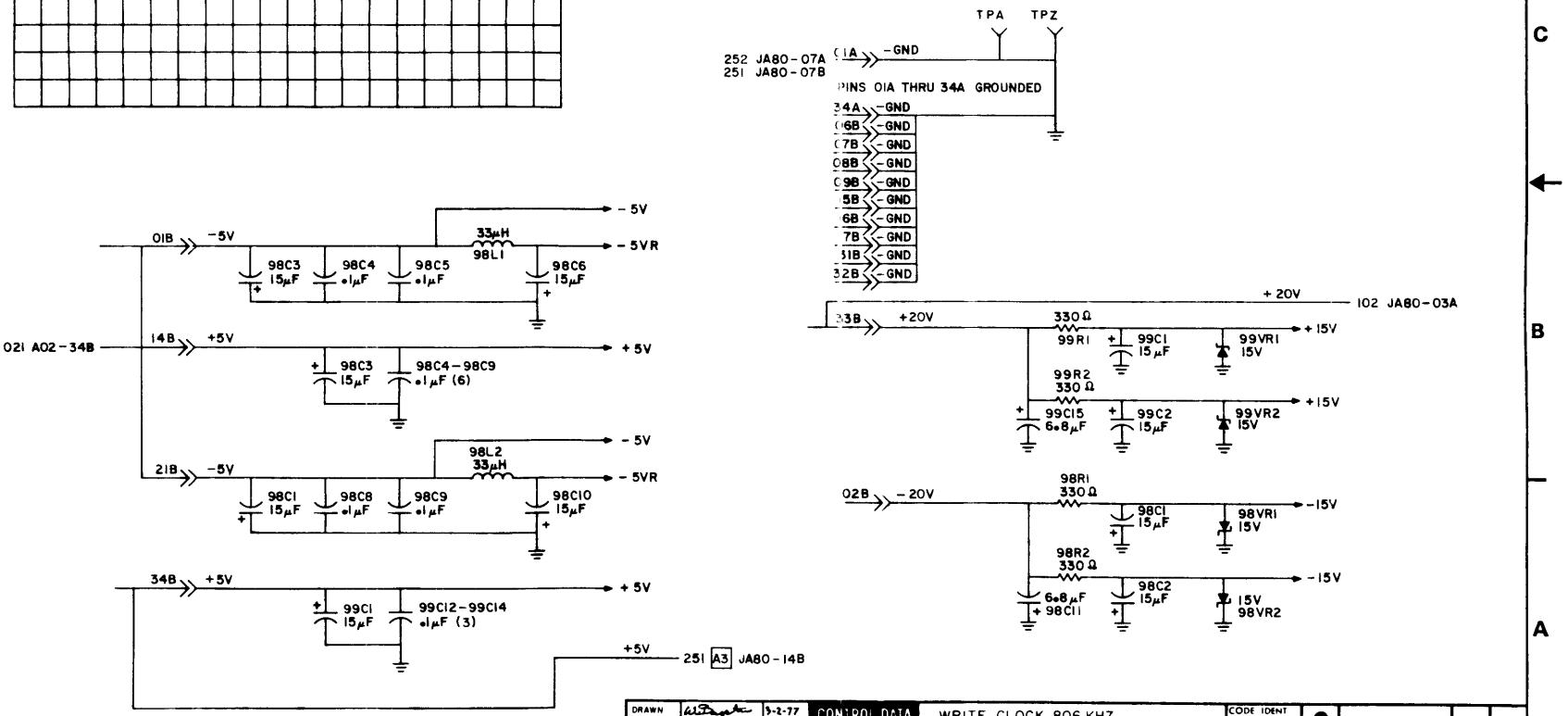

DRAWN		5-2-77	CONTROL DATA	WRITE CLOCK 806 KHZ TO 9.67 MHZ DIAGRAMS	CODE IDENT 19333	C	83322680	C B
CHECKED								
ENGINEER			NORMANDALE DIVISION	TYPE CLSV LOC A2A01	CROSS REF NO 011		SHEET 1 OF 3	PAGE 1-13
APPROVED								

REF 83215701

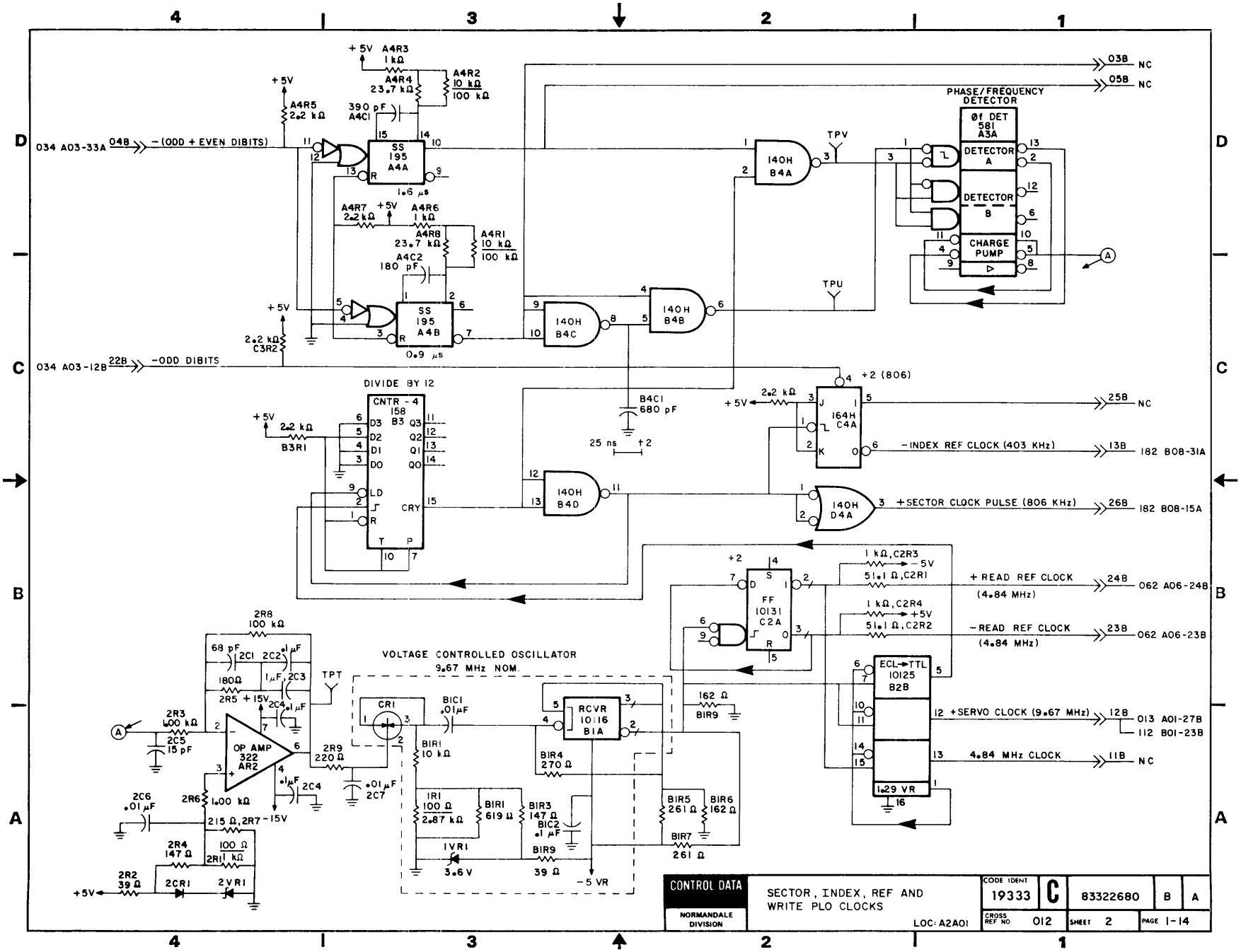
+5V A4R3 1 kΩ
A4R4 23.7 kΩ
A4R2 10 kΩ 100 kΩ
+5V
A4R5 2.2 kΩ
390 pF A4C1
034 A03-33A 04B -(ODD + EVEN DIBITS)
SS 195 A4A
1.6 μs
A4R7 2.2 kΩ
+5V
A4R6 1 kΩ
A4R8 23.7 kΩ
A4R1 10 kΩ 100 kΩ
A4C2 180 pF
SS 195 A4B
0.9 μs
+5V
2.2 kΩ C3R2
034 A03-12B 22B -ODD DIBITS
140H B4A
140H B4C
140H B4B
TPV
TPU
PHASE/FREQUENCY DETECTOR
Øf DET 581 A3A
DETECTOR A
DETECTOR B
CHARGE PUMP
03B NC
05B NC
DIVIDE BY 12
CNTR - 4 158 B3
+5V 2.2 kΩ B3R1
B4C1 680 pF
25 ns ÷2
÷2 (806)
164H C4A
+5V 2.2 kΩ
25B NC
-INDEX REF CLOCK (403 KHz)
13B 182 B08-31A
140H B4D
140H D4A
+SECTOR CLOCK PULSE (806 KHz)
26B 182 B08-15A
÷2
FF 10131 C2A
1 kΩ,C2R3 → -5V
51.1 Ω,C2R1
+ READ REF CLOCK (4.84 MHz)
24B 062 A06-24B
1 kΩ,C2R4 → +5V
51.1 Ω,C2R2
-READ REF CLOCK (4.84 MHz)
23B 062 A06-23B
ECL→TTL 10125 B2B
12 +SERVO CLOCK (9.67 MHz)
12B 013 A01-27B
112 B01-23B
13 4.84 MHz CLOCK
11B NC
1.29 VR
2R8 100 kΩ
68 pF 2C1 .1 μF 2C2
180Ω 1 μF 2C3
2R5 +15V
2C4 .1 μF
TPT
VOLTAGE CONTROLLED OSCILLATOR 9.67 MHz NOM.
2R3 400 kΩ
2C5 15 pF
OP AMP 322 AR2
2R9 220 Ω
.01 μF 2C7
2C6 .01 μF
2R6 1.00 kΩ
215 Ω,2R7 -15V
2R4 147 Ω
100 Ω 2R1 1 kΩ
2R2 39 Ω
2CR1
2VR1
+5V
CR1
B1C1 .01 μF
B1R1 10 kΩ
1R1 100 Ω 2.87 kΩ
B1R1 619 Ω
B1R3 147 Ω
B1C2 .1 μF
1VR1 3.6 V
B1R9 39 Ω
-5 VR
RCVR 10116 B1A
B1R4 270 Ω
162 Ω B1R9
B1R5 261 Ω
B1R6 162 Ω
B1R7 261 Ω
CONTROL DATA
NORMANDALE DIVISION
SECTOR, INDEX, REF AND WRITE PLO CLOCKS
LOC: A2A01
CODE IDENT 19333
C
83322680
B
A
CROSS REF NO 012
SHEET 2
PAGE 1-14

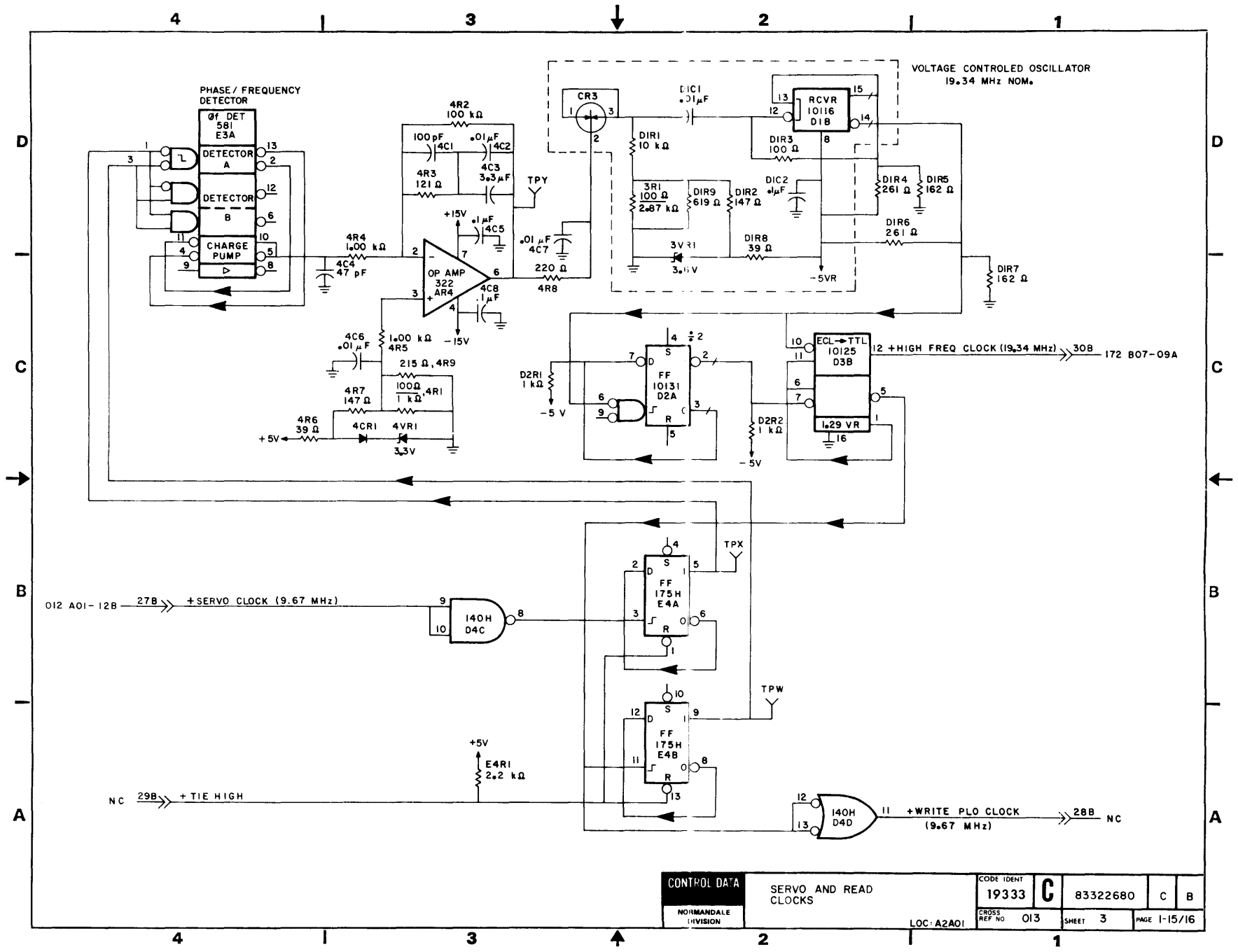

CONTROL DATA NORMANDALE DIVISION	SERVO AND READ CLOCKS LOC: A2A01	CODE IDENT 19333	C	83322680	C B
		CROSS REF NO 013	SHEET 3	PAGE 1-15/16	

REVISION STATUS OF SHEETS

1	2	3	4	5	6	7	8	9	10	11	12	13	14	15	16	17	18	19	20
A	A																		

REVISIONS

REV.	ECO.	DESCRIPTION	DRFT.	DATE	CHK'D
A	PE23000	RELEASED			

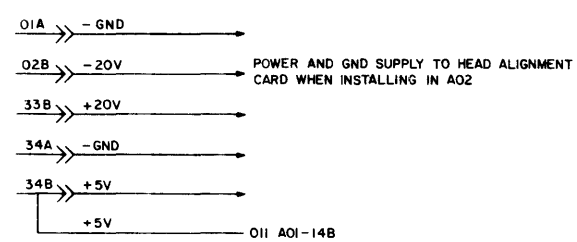

DRAWN	[signature]	3-14-77	CONTROL DATA	FTU/ HEAD ALIGNMENT CARD SLOT WIRING DIAGRAMS	CODE IDENT 19333	C	83322680	A	A
CHECKED									
ENGINEER			NORMANDALE DIVISION		CROSS REF NO 021		SHEET 1 OF 2	PAGE 1-17	
APPROVED				LOC A2A02					

REF 83215702

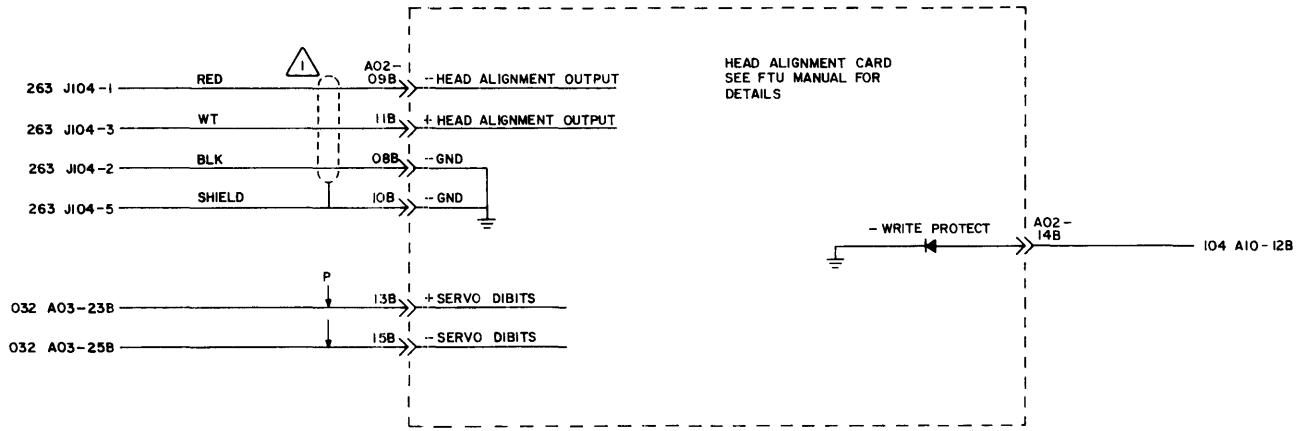

NOTES:

1. THIS CABLE IS USED FOR HEAD ALIGNMENT PURPOSES WITH THE HEAD ALIGNMENT CARD INSTALLED IN LOC A02.
2. CROSS REF NUMBERS LEAD READER TO LOGIC SHEET WHICH SHOWS CONNECTOR PIN IN FUNCTIONAL RELATIONSHIP TO REMAINDER OF DRIVE

CONTROL DATA NORMANDALE DIVISION	FTU/HEAD ALIGNMENT CARD SLOT LOC: A2A02	CODE IDENT 19333	C	83322680	A	A
		CROSS REF NO 022		SHEET 2	PAGE 1-18	

REVISION STATUS OF SHEETS

1	2	3	4	5	6	7	8	9	10	11	12	13	14	15	16	17	18	19	20
A	A	A	A	A															

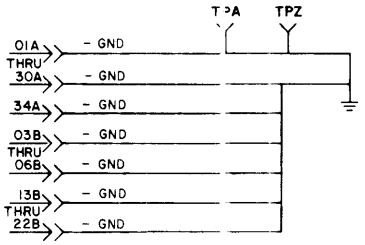

UNUSED LOGIC ELEMENTS

TYPE	LOCATION	OUTPUT PIN(S)
200	D3	4,6

REVISIONS

REV.	ECO.	DESCRIPTION	DRFT	DATE	CHK'D
A	PE23000	RELEASED			

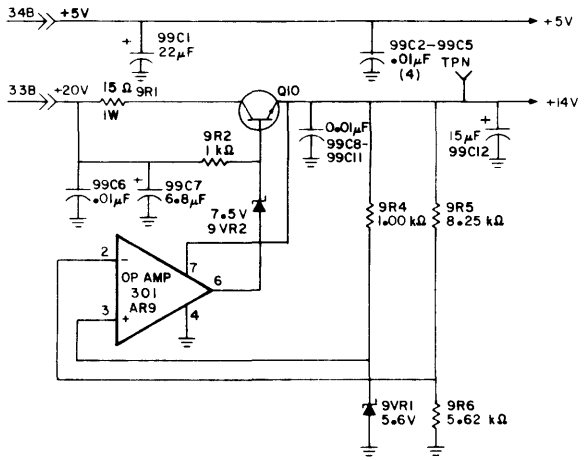

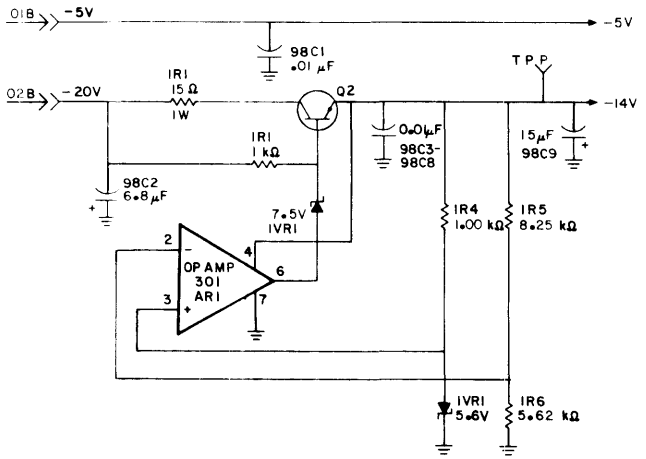

DRAWN	W. Bryant	3-4-77	CONTROL DATA	FINE SERVO DECODER DIAGRAMS	CODE IDENT 19333	C	83322680	A	A
CHECKED									
ENGINEER			NORMANDALE DIVISION	TYPE HFRV LOC A2A03	CROSS REF NO 031	SHEET 1 OF 5	PAGE 1-19		
APPROVED									

REF 83215703

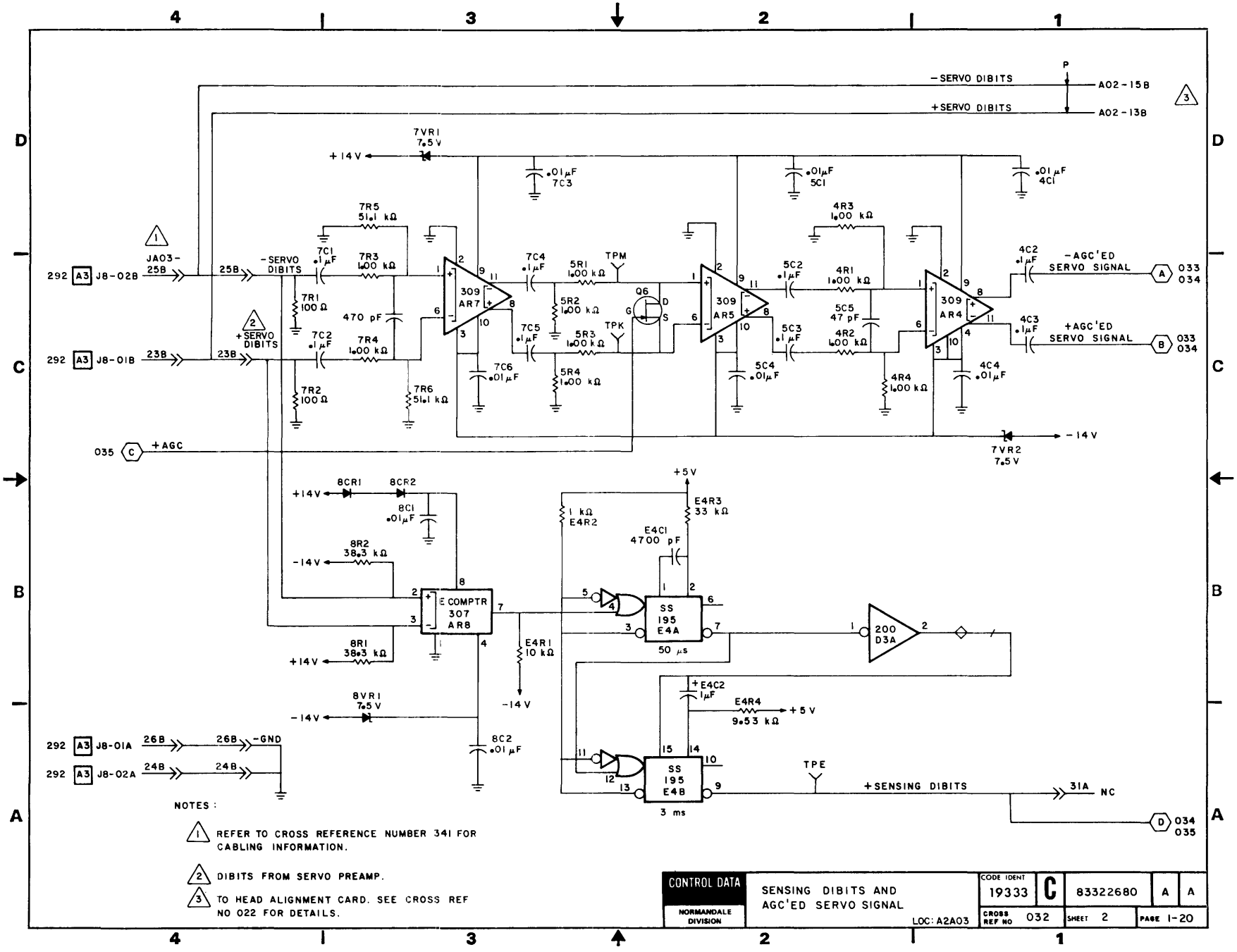

NOTES :

1. REFER TO CROSS REFERENCE NUMBER 341 FOR CABLING INFORMATION.
2. DIBITS FROM SERVO PREAMP.
3. TO HEAD ALIGNMENT CARD. SEE CROSS REF NO 022 FOR DETAILS.

CONTROL DATA NORMANDALE DIVISION	SENSING DIBITS AND AGC'ED SERVO SIGNAL LOC: A2A03	CODE IDENT 19333	C	83322680	A	A
		CROSS REF NO 032		SHEET 2	PAGE 1-20	

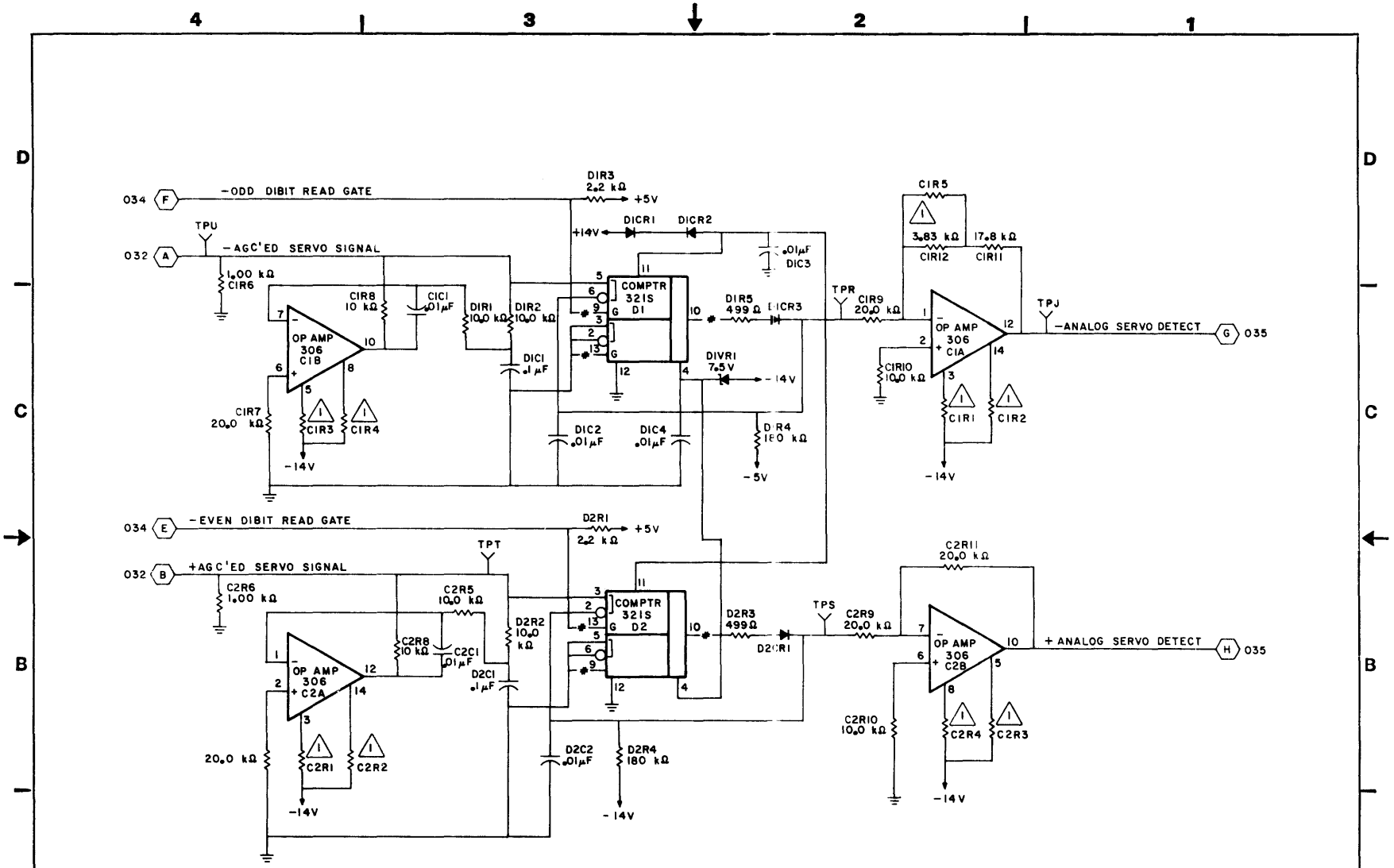

CONTROL DATA NORMANDALE DIVISION	TRACK SERVO SIGNAL AND CYL DETECT A AND B LOC: A2A03	CODE IDENT 19333	C	83322680	A	A
		CROSS REF NO 033		SHEET 3	PAGE 1-21	

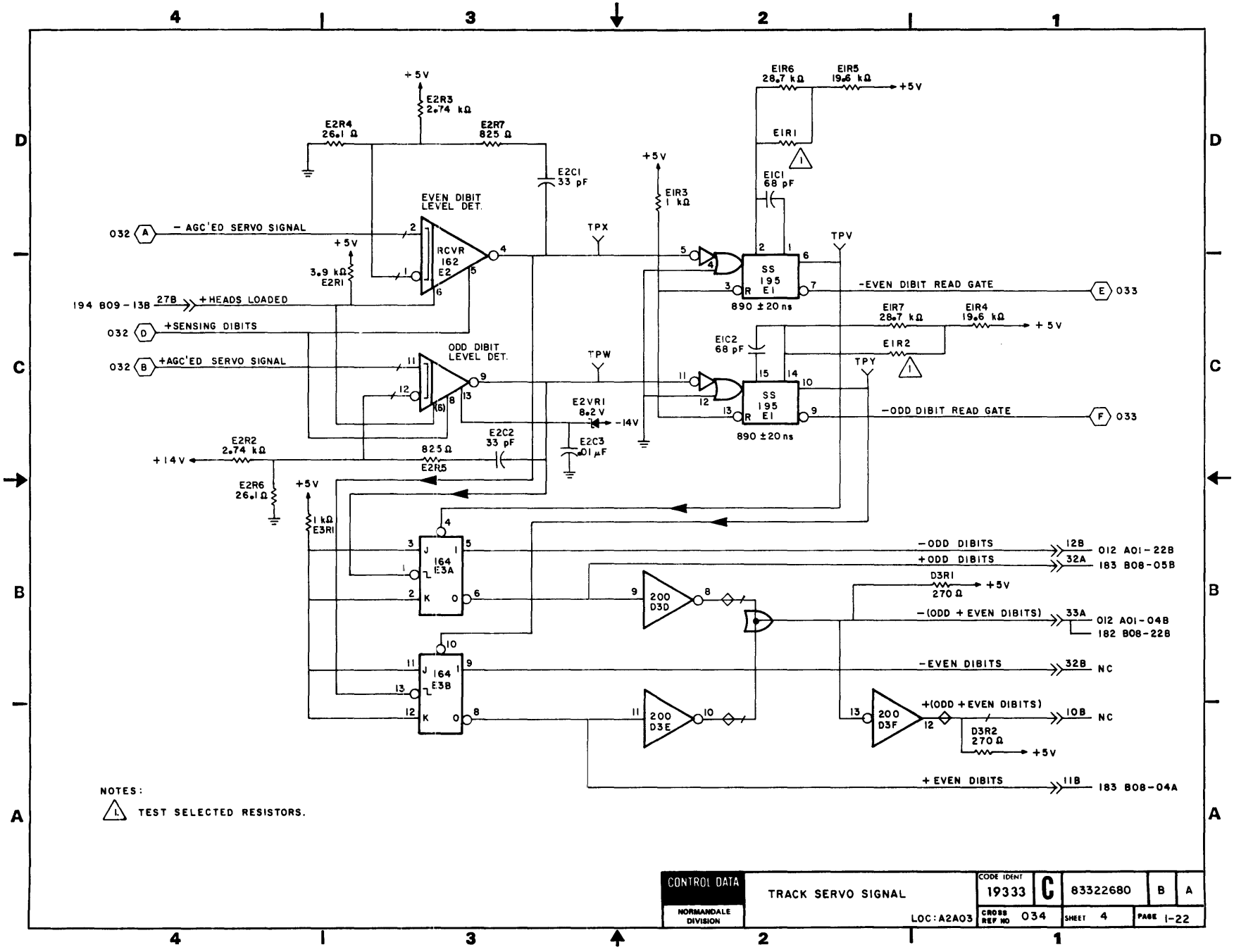

NOTES:

1. TEST SELECTED RESISTORS.

CONTROL DATA NORMANDALE DIVISION	TRACK SERVO SIGNAL LOC: A2A03	CODE IDENT 19333	C	83322680	B	A
		CROSS REF NO 034		SHEET 4	PAGE 1-22	

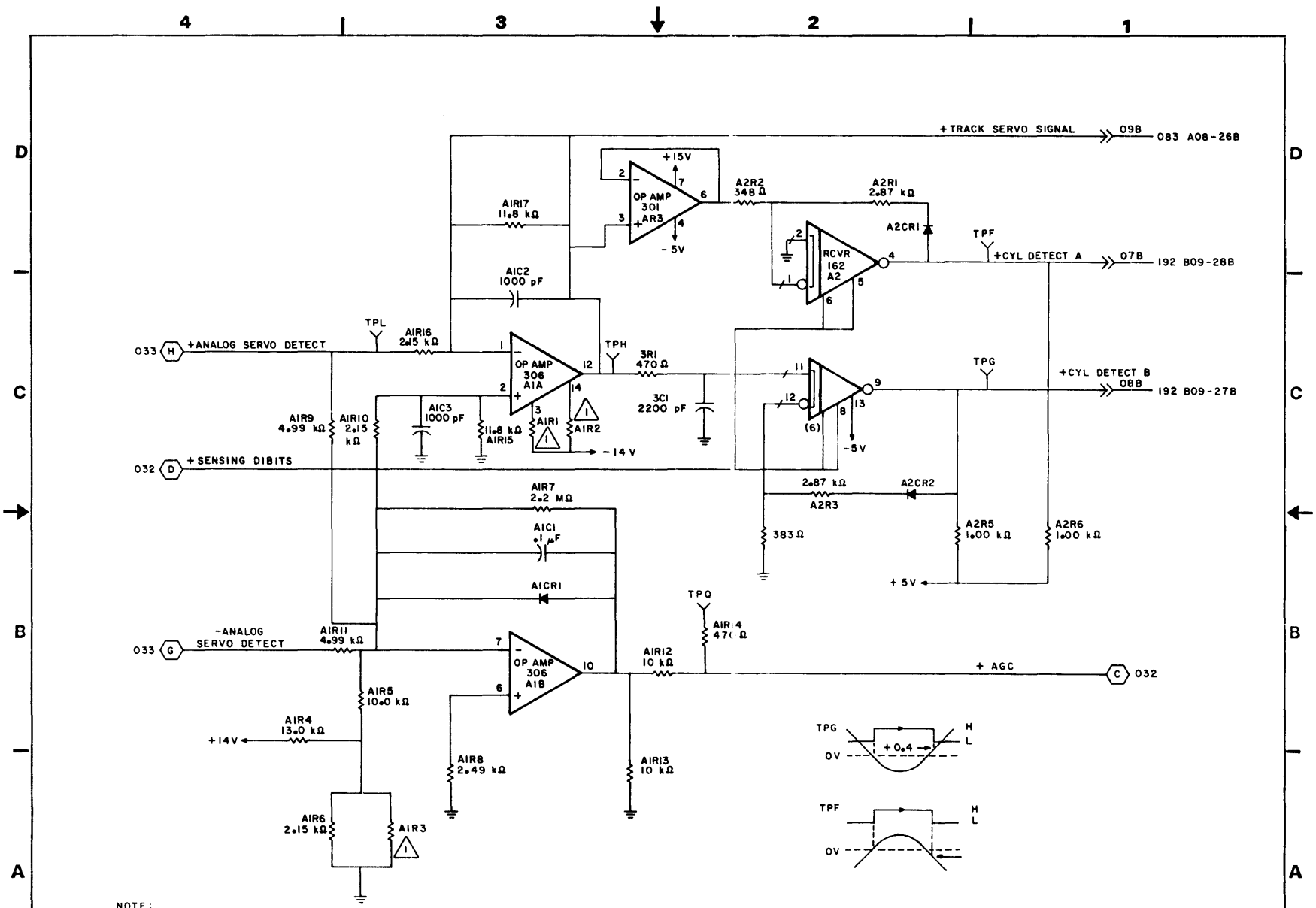

CONTROL DATA NORMANDALE DIVISION	CYL DETECT A AND B	CODE IDENT 19333	C	83322680	A A
	LOC: A2A03	CROSS REF NO 035	SHEET 5	PAGE 1-23/24	

REVISION STATUS OF SHEETS

1	2	3	4	5	6	7	8	9	10	11	12	13	14	15	16	17	18	19	20
A	A	A	A	A															
B	A	A	A	A															

REVISIONS

REV.	ECO.	DESCRIPTION	DRFT	DATE	CHK'D
A	PE23000	RELEASED			
B		DIAGRAM CORRECTION	A A O	8 25 78	

UNUSED LOGIC ELEMENTS

TYPE	LOCATION	OUTPUT PIN(S)
175H	C1	5,6
4049	E2	10,12
20C	B2	6

MAINTENANCE SWITCHES AND FAULT INDICATORS ON CARD EDGE

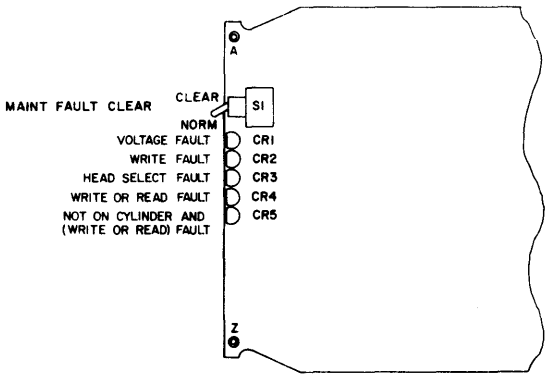

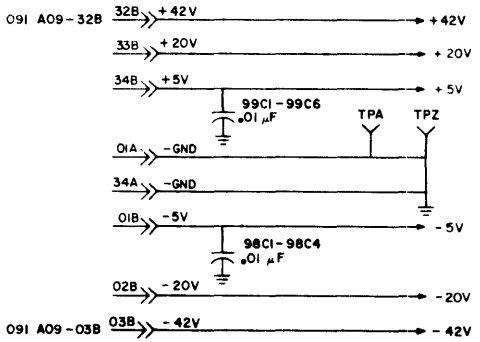

DRAWN	G. RABINE	9-4-77	CONTROL DATA NORMANDALE DIVISION	FAULT CARD DIAGRAMS	CODE IDENT 19333	C	83322680 E B
CHECKED							
ENGINEER				TYPE: EKFV LOC: A2A04	CROSS REF NO. 041	SHEET 1 OF 5	PAGE 1-25
APPROVED							REF 83215704

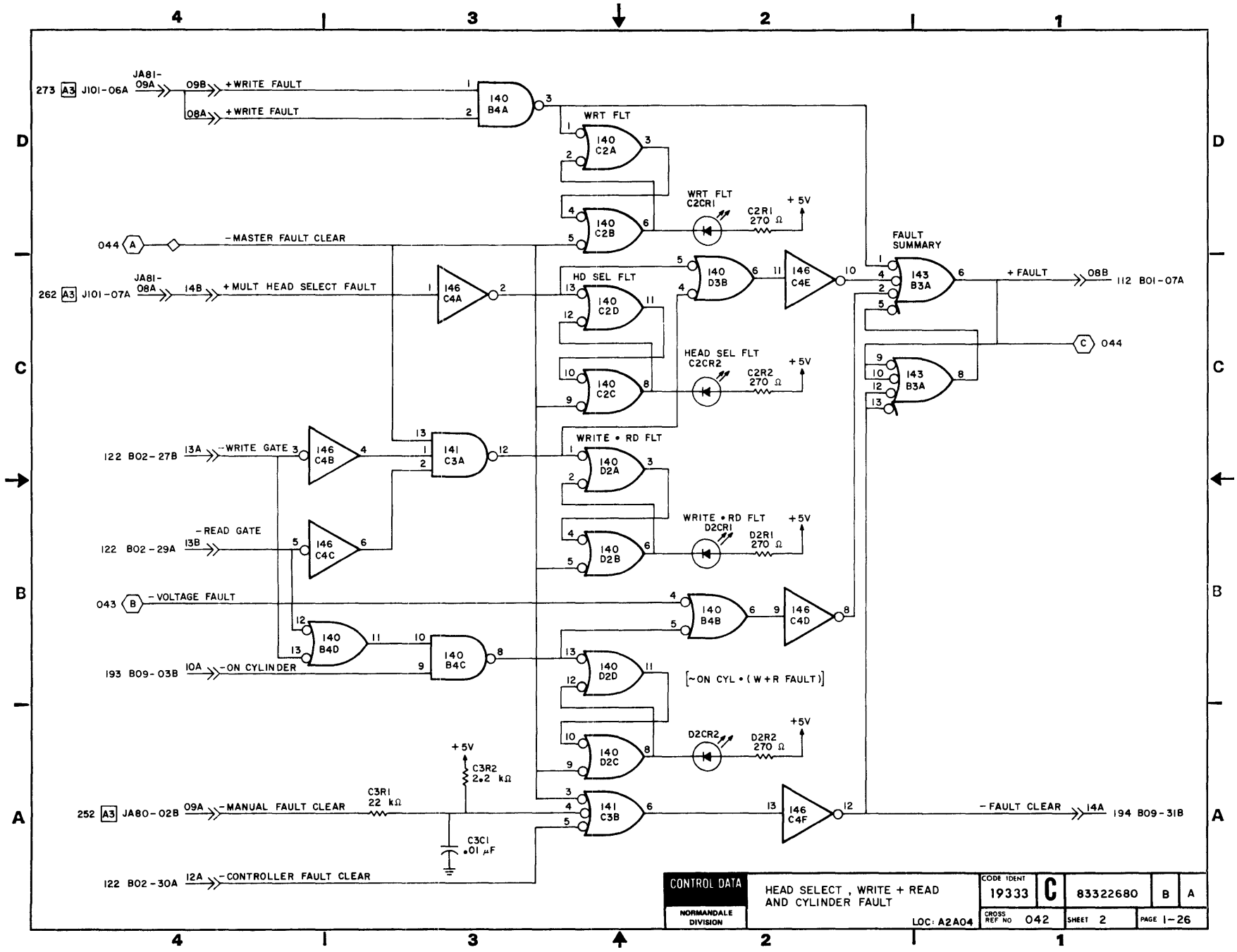

CONTROL DATA	HEAD SELECT , WRITE + READ AND CYLINDER FAULT	CODE IDENT 19333	C	83322680	B A
NORMANDALE DIVISION	LOC: A2A04	CROSS REF NO 042	SHEET 2	PAGE 1-26	

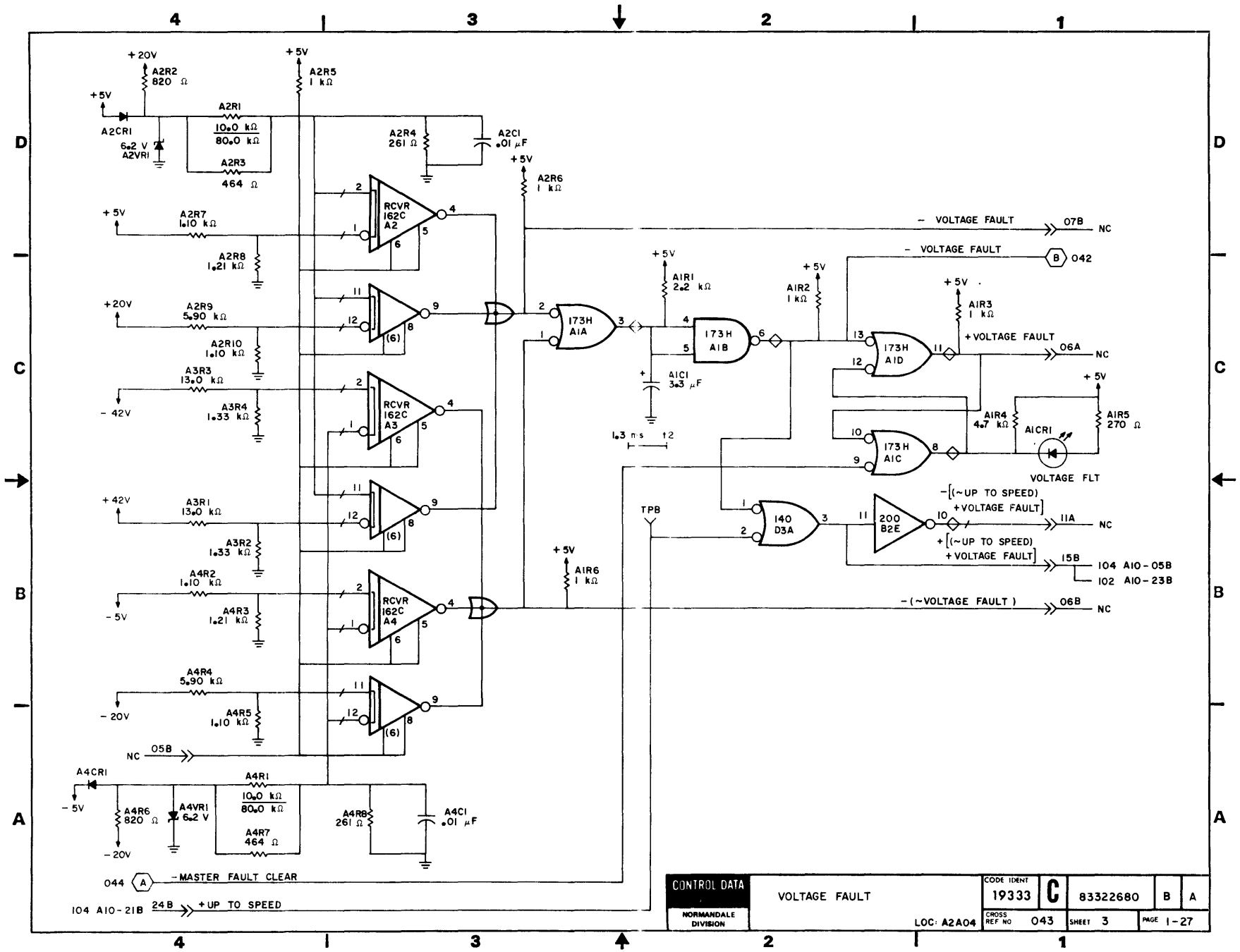
+20V
A2R2 820 Ω
+5V
A2R5 1 kΩ
A2R1
10.0 kΩ
80.0 kΩ
A2R3 464 Ω
A2CR1
6.2 V A2VR1
A2R4 261 Ω
A2C1 .01 μF
A2R6 1 kΩ
A2R7 10 kΩ
A2R8 1.21 kΩ
A2R9 5.90 kΩ
A2R10 1.10 kΩ
A3R3 13.0 kΩ
A3R4 1.33 kΩ
-42V
A3R1 13.0 kΩ
A3R2 1.33 kΩ
+42V
A4R2 1.10 kΩ
A4R3 1.21 kΩ
-5V
A4R4 5.90 kΩ
A4R5 1.10 kΩ
-20V
NC 05B
RCVR 162C A2
RCVR 162C A3
RCVR 162C A4
173H A1A
A1R1 2.2 kΩ
A1C1 3.3 μF
1.3 n·s
173H A1B
A1R2 1 kΩ
173H A1D
A1R3 1 kΩ
A1R4 4.7 kΩ
A1CR1
A1R5 270 Ω
173H A1C
VOLTAGE FLT
- VOLTAGE FAULT 07B NC
- VOLTAGE FAULT B 042
+ VOLTAGE FAULT 06A NC
TPB
140 D3A
200 82E
-[(~UP TO SPEED) +VOLTAGE FAULT] 11A NC
+[(~UP TO SPEED) +VOLTAGE FAULT] 15B
104 A10-05B
102 A10-23B
A1R6 1 kΩ
-(~VOLTAGE FAULT) 06B NC
A4CR1
A4R1
10.0 kΩ
80.0 kΩ
A4R7 464 Ω
A4R6 820 Ω
A4VR1 6.2 V
A4R8 261 Ω
A4C1 .01 μF
044 A -MASTER FAULT CLEAR
104 A10-21B 24B +UP TO SPEED
CONTROL DATA
NORMANDALE DIVISION
VOLTAGE FAULT
LOC: A2A04
CODE IDENT 19333
C
83322680
B
A
CROSS REF NO 043
SHEET 3
PAGE 1-27

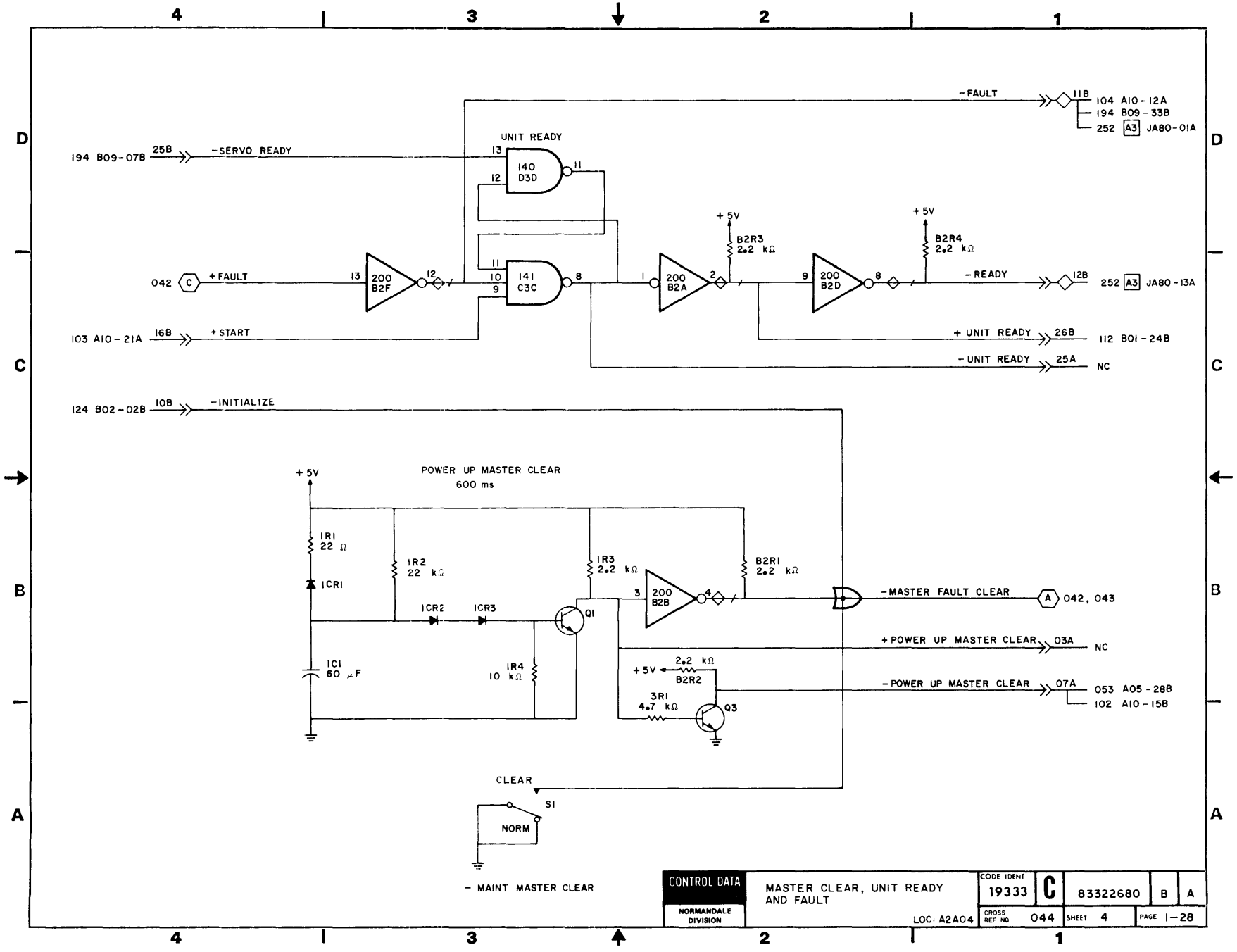
-FAULT
11B
104 A10-12A
194 B09-33B
252 A3 JA80-01A
UNIT READY
194 B09-07B
25B
-SERVO READY
140 D3D
141 C3C
042 C
+FAULT
200 B2F
200 B2A
200 B2D
+5V
B2R3 2.2 kΩ
B2R4 2.2 kΩ
-READY
12B
252 A3 JA80-13A
103 A10-21A
16B
+START
+UNIT READY
26B
112 B01-24B
-UNIT READY
25A
NC
124 B02-02B
10B
-INITIALIZE
POWER UP MASTER CLEAR
600 ms
1R1 22 Ω
1R2 22 kΩ
1R3 2.2 kΩ
B2R1 2.2 kΩ
1CR1
1CR2
1CR3
Q1
200 B2B
-MASTER FAULT CLEAR
A 042, 043
+POWER UP MASTER CLEAR
03A
NC
1C1 60 μF
1R4 10 kΩ
2.2 kΩ
B2R2
3R1 4.7 kΩ
Q3
-POWER UP MASTER CLEAR
07A
053 A05-28B
102 A10-15B
CLEAR
S1
NORM
- MAINT MASTER CLEAR
CONTROL DATA
NORMANDALE DIVISION
MASTER CLEAR, UNIT READY AND FAULT
LOC: A2A04
CODE IDENT 19333
C
83322680
B
A
CROSS REF NO 044
SHEET 4
PAGE 1-28

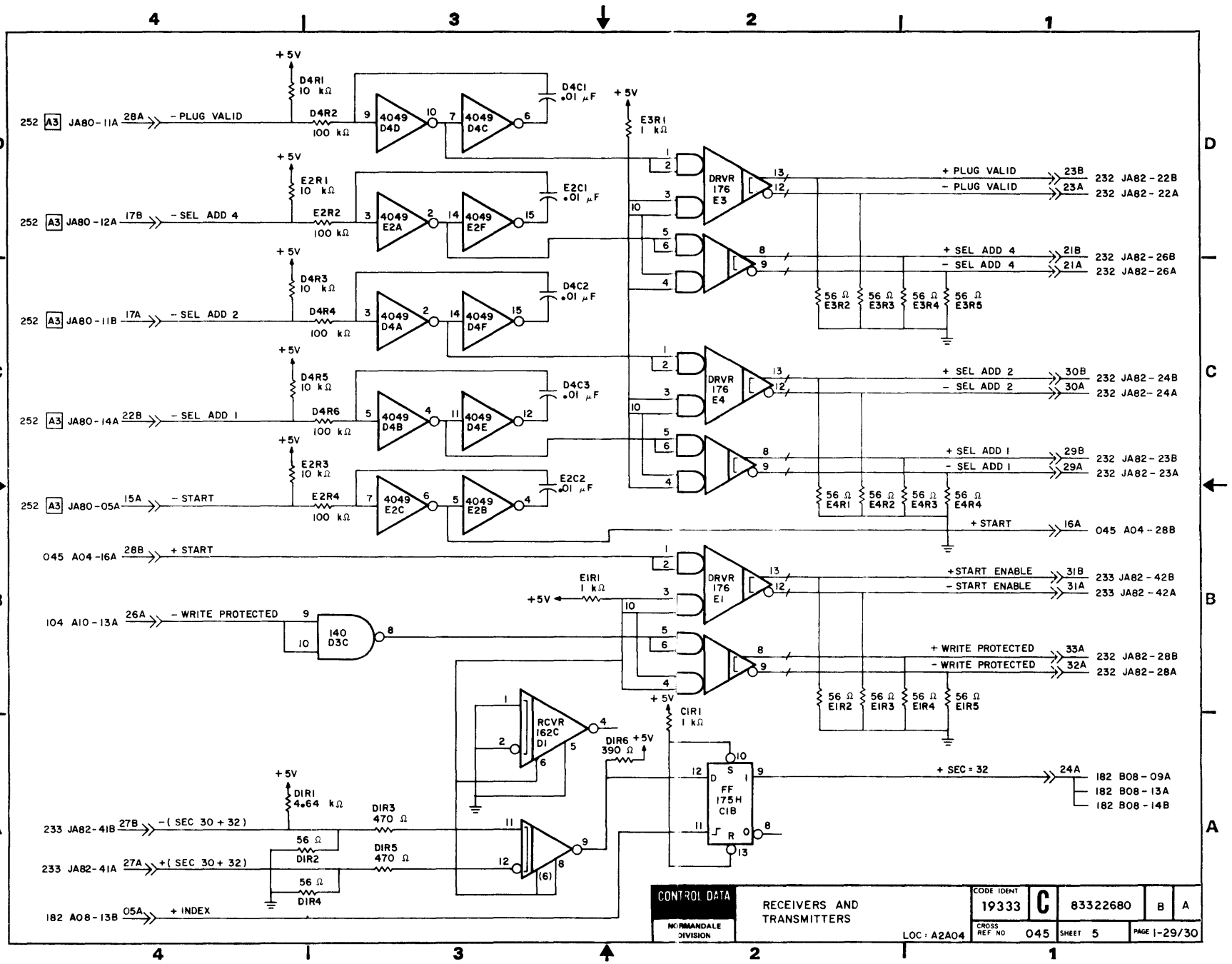
4
3
2
1
D
C
B
A
+5V
D4R1 10 kΩ
D4R2 100 kΩ
D4C1 .01 μF
252 A3 JA80-11A 28A - PLUG VALID
4049 D4D
4049 D4C
E3R1 1 kΩ
DRVR 176 E3
+ PLUG VALID 23B
- PLUG VALID 23A
232 JA82-22B
232 JA82-22A
E2R1 10 kΩ
E2R2 100 kΩ
E2C1 .01 μF
252 A3 JA80-12A 17B - SEL ADD 4
4049 E2A
4049 E2F
+ SEL ADD 4 21B
- SEL ADD 4 21A
232 JA82-26B
232 JA82-26A
56 Ω E3R2
56 Ω E3R3
56 Ω E3R4
56 Ω E3R5
D4R3 10 kΩ
D4R4 100 kΩ
D4C2 .01 μF
252 A3 JA80-11B 17A - SEL ADD 2
4049 D4A
4049 D4F
DRVR 176 E4
+ SEL ADD 2 30B
- SEL ADD 2 30A
232 JA82-24B
232 JA82-24A
D4R5 10 kΩ
D4R6 100 kΩ
D4C3 .01 μF
252 A3 JA80-14A 22B - SEL ADD 1
4049 D4B
4049 D4E
+ SEL ADD 1 29B
- SEL ADD 1 29A
232 JA82-23B
232 JA82-23A
56 Ω E4R1
56 Ω E4R2
56 Ω E4R3
56 Ω E4R4
E2R3 10 kΩ
E2R4 100 kΩ
E2C2 .01 μF
252 A3 JA80-05A 15A - START
4049 E2C
4049 E2B
+ START 16A
045 A04-28B
045 A04-16A 28B + START
E1R1 1 kΩ
DRVR 176 E1
+START ENABLE 31B
- START ENABLE 31A
233 JA82-42B
233 JA82-42A
104 A10-13A 26A - WRITE PROTECTED
140 D3C
+ WRITE PROTECTED 33A
- WRITE PROTECTED 32A
232 JA82-28B
232 JA82-28A
56 Ω E1R2
56 Ω E1R3
56 Ω E1R4
56 Ω E1R5
C1R1 1 kΩ
RCVR 162C D1
DIR6 390 Ω
FF 175H C18
+ SEC = 32 24A
182 B08-09A
182 B08-13A
182 B08-14B
DIR1 4.64 kΩ
DIR3 470 Ω
DIR2 56 Ω
DIR5 470 Ω
DIR4 56 Ω
233 JA82-41B 27B -(SEC 30+32)
233 JA82-41A 27A +(SEC 30+32)
182 A08-13B 05A + INDEX
CONTROL DATA
NORMANDALE DIVISION
RECEIVERS AND TRANSMITTERS
LOC: A2A04
CODE IDENT 19333
C
83322680
B
A
CROSS REF NO 045
SHEET 5
PAGE 1-29/30

REVISION STATUS OF SHEETS

	1	2	3	4	5	6	7	8	9	10	11	12	13	14	15	16	17	18	19	20
A	A	A	A																	
B	B	A	B																	

REVISIONS

REV	ECO	DESCRIPTION	DRFT	DATE	CHK'D
A	PE48906	RELEASE			
B	PE48918	CHG DELAY ON CARD	GR	4 4 78	

NOTES

1. TYPICAL CONFIGURATION FOR TERMINATORS AT-C2A, AT-C2B AND AT-B4A AS FOLLOWS

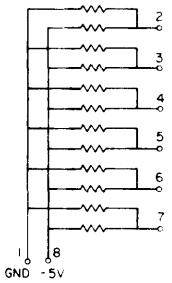

2. DELAY LINES ARE CONNECTED TO JUMPER BLOCK AS SHOWN IN DIAGRAM BELOW. ACTUAL DELAYS ARE SELECTED DURING MANUFACTURING. THIS DIAGRAM SHOWS TYPICAL CONNECTIONS. DELAY TIME FOR EACH DELAY LINE PIN RELATIVE TO PIN 6 INPUT IS SHOWN IN CHART BELOW.

PIN	DELAY TIMES (NS) B1	A2
5	5	10
4	10	20
3	15	30
2	20	40
1	25	50
13	30	60
12	35	70
11	40	80
10	45	90
9	50	100

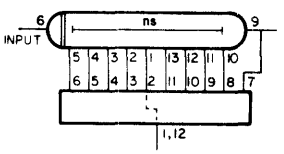

UNUSED LOGIC ELEMENTS

TYPE	LOCATION	OUTPUT PIN(S)
145	A1	9, 10
164S	D2	8, 9
10104	A3	2
10102	B2	9, 15, 14
10125	D3	12, 13
10131	B3	14, 15
200	E2	2, 4, 6, 8

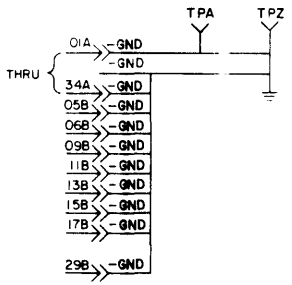

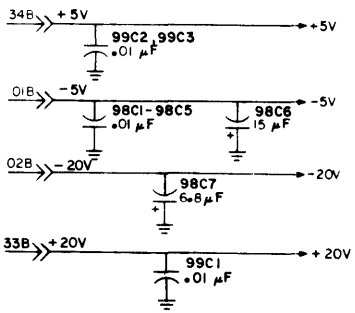

DRAWN	M.ANDERSON	1-4-77	CONTROL DATA	DATA LATCH DIAGRAMS	CODE IDENT 19333	C	83322680 C B
CHECKED							
ENGINEER		2/17/78	NORMANDALE DIVISION	TYPE HLRV LOC A2A05	CROSS REF NO 051	SHEET 1 OF 3	PAGE 1-31
APPROVED							

REF 83215705

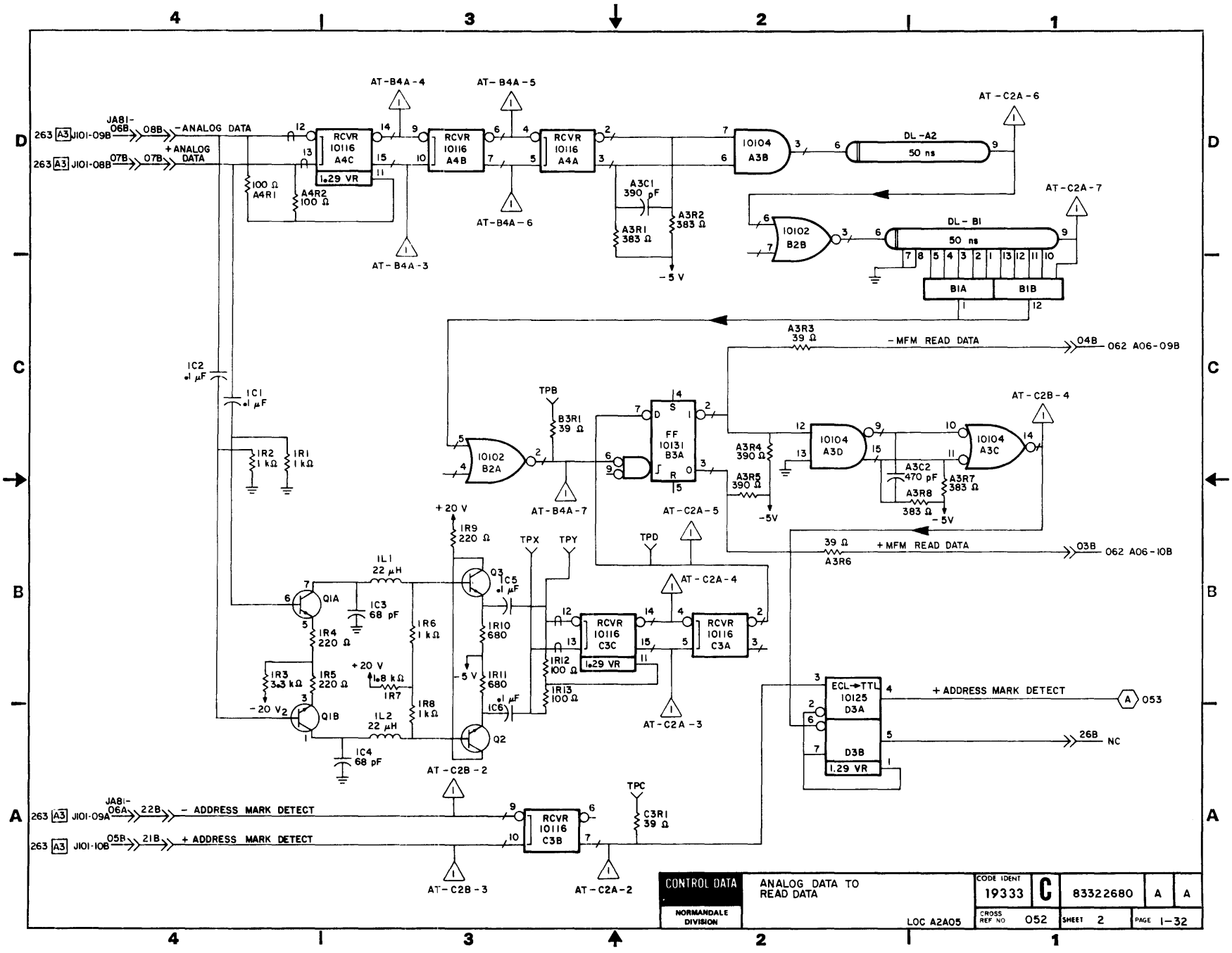

263 A3 J101-09B
JA81-06B
08B
-ANALOG DATA
263 A3 J101-08B
07B
07B
+ANALOG DATA
RCVR 10116 A4C
1.29 VR
100 Ω A4R1
A4R2 100 Ω
AT-B4A-4
AT-B4A-3
RCVR 10116 A4B
AT-B4A-5
AT-B4A-6
RCVR 10116 A4A
A3C1 390 pF
A3R1 383 Ω
A3R2 383 Ω
-5 V
10104 A3B
DL-A2
50 ns
AT-C2A-6
10102 B2B
DL-B1
50 ns
AT-C2A-7
B1A
B1B
A3R3 39 Ω
-MFM READ DATA
04B
062 A06-09B
1C2 .1 μF
1C1 .1 μF
1R2 1 kΩ
1R1 1 kΩ
TPB
B3R1 39 Ω
10102 B2A
AT-B4A-7
FF 10131 B3A
AT-C2A-5
A3R4 390 Ω
A3R5 390 Ω
-5V
10104 A3D
10104 A3C
AT-C2B-4
A3C2 470 pF
A3R8 383 Ω
A3R7 383 Ω
-5V
39 Ω A3R6
+MFM READ DATA
03B
062 A06-10B
+20 V
1R9 220 Ω
TPX
TPY
TPD
1L1 22 μH
Q3
1C5 .1 μF
Q1A
1C3 68 pF
1R4 220 Ω
1R6 1 kΩ
1R10 680
RCVR 10116 C3C
1.29 VR
RCVR 10116 C3A
AT-C2A-4
1R3 3.3 kΩ
1R5 220 Ω
+20 V
1.8 kΩ
1R7
-5 V
1R11 680
1R12 100 Ω
1R13 100 Ω
-20 V
Q1B
1R8 1 kΩ
1C6 .1 μF
1L2 22 μH
Q2
1C4 68 pF
AT-C2A-3
AT-C2B-2
ECL→TTL 10125 D3A
D3B
1.29 VR
+ADDRESS MARK DETECT
053
26B
NC
263 A3 J101-09A
JA81-06A
22B
- ADDRESS MARK DETECT
263 A3 J101-10B
05B
21B
+ ADDRESS MARK DETECT
RCVR 10116 C3B
TPC
C3R1 39 Ω
AT-C2B-3
AT-C2A-2
CONTROL DATA
NORMANDALE DIVISION
ANALOG DATA TO READ DATA
LOC A2A05
CODE IDENT 19333
C
83322680
A
A
CROSS REF NO 052
SHEET 2
PAGE 1-32

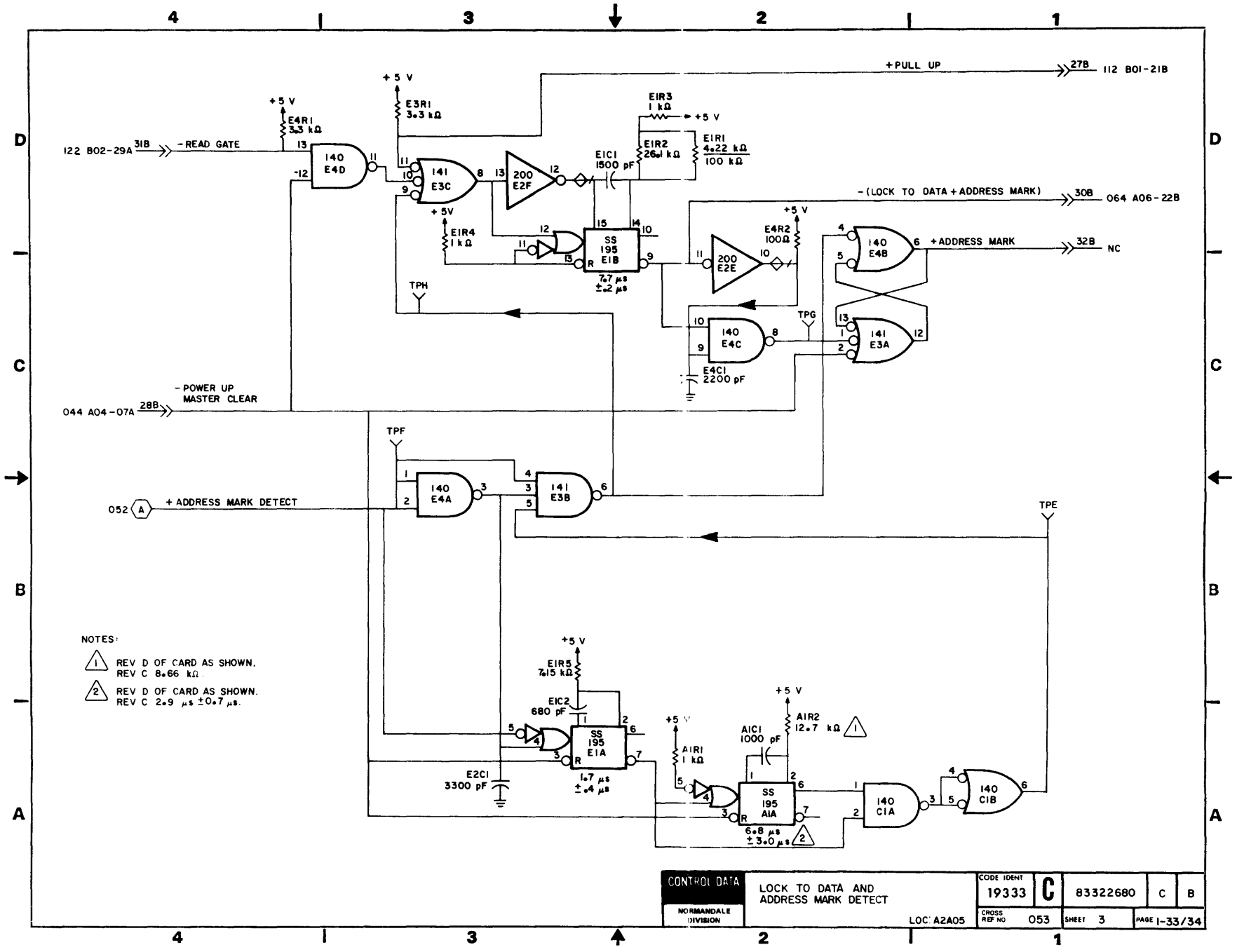
+PULL UP
27B
112 B01-21B
+5 V
E3R1
3.3 kΩ
E4R1
3.3 kΩ
E1R3
1 kΩ
E1R2
26.1 kΩ
E1R1
4.22 kΩ
100 kΩ
E1C1
1500 pF
122 B02-29A
318
-READ GATE
140
E4D
141
E3C
200
E2F
-(LOCK TO DATA + ADDRESS MARK)
308
064 A06-22B
E1R4
1 kΩ
SS
195
E1B
7.7 μs
±.2 μs
E4R2
100Ω
200
E2E
140
E4B
+ADDRESS MARK
328
NC
TPH
TPG
140
E4C
141
E3A
E4C1
2200 pF
-POWER UP
MASTER CLEAR
044 A04-07A
288
TPF
140
E4A
141
E3B
052
A
+ADDRESS MARK DETECT
TPE
NOTES:
1 REV D OF CARD AS SHOWN.
REV C 8.66 kΩ.
2 REV D OF CARD AS SHOWN.
REV C 2.9 μs ±0.7 μs.
E1R5
7.15 kΩ
E1C2
680 pF
SS
195
E1A
1.7 μs
±.4 μs
E2C1
3300 pF
A1R1
1 kΩ
A1C1
1000 pF
A1R2
12.7 kΩ
SS
195
A1A
6.8 μs
±3.0 μs
140
C1A
140
C1B
CONTROL DATA
NORMANDALE DIVISION
LOCK TO DATA AND
ADDRESS MARK DETECT
LOC: A2A05
CODE IDENT
19333
C
83322680
C
B
CROSS REF NO
053
SHEET 3
PAGE 1-33/34

REVISION STATUS OF SHEETS

1	2	3	4	5	6	7	8	9	10	11	12	13	14	15	16	17	18	19	20
A	A	A	A	A															

REVISIONS

REV.	ECO.	DESCRIPTION	DRFT	DATE	CHK'D
A	PE23000	RELEASED			

NOTES

1 TYPICAL CONFIGURATION FOR TERMINATORS ATA3, ATB2 ATB3, ATB4, ATC3, ATD4, ATE2 AS FOLLOWS

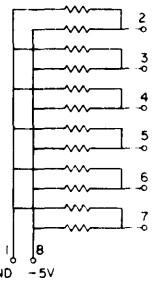

NOTE 2 SEE LOWER LEFT CORNER

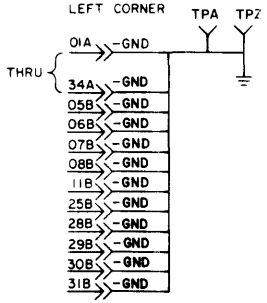

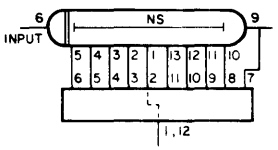

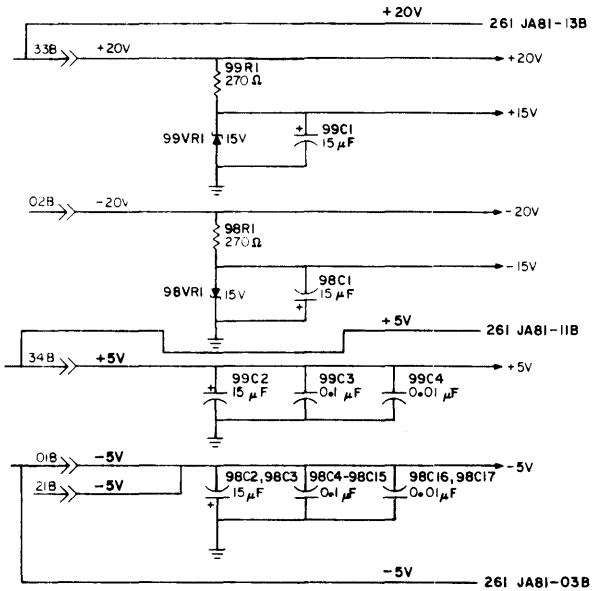

UNUSED LOGIC ELEMENTS

TYPE	LOCATION	OUTPUT PIN (S)
10131	E4	2,3
10116	E1	14,15
10116	C3	2,3,14,15
10125	D4	4,5

2 DELAY LINES ARE CONNECTED TO JUMPER BLOCK AS SHOWN IN DIAGRAM BELOW. ACTUAL DELAYS ARE SELECTED DURING MANUFACTURING. THIS DIAGRAM SHOWS TYPICAL CONNECTIONS. DELAY TIME FOR EACH DELAY LINE PIN RELATIVE TO PIN 6 INPUT IS SHOWN IN CHART BELOW.

PIN	DELAY TIMES (NS)	
	B1	A2
5	5	10
4	10	20
3	15	30
2	20	40
1	25	50
13	30	60
12	35	70
11	40	80
10	45	90
9	50	100

DRAWN	M.ANDERSON	5-4-17	CONTROL DATA	READ PLO DIAGRAMS	CODE IDENT 19333	C	83322680	A	A
CHECKED									
ENGINEER			NORMANDALE DIVISION	TYPE BLZV	LOC A2A06	CROSS REF NO 061	SHEET 1 OF 5	PAGE 1-35	
APPROVED									

REF 83215706

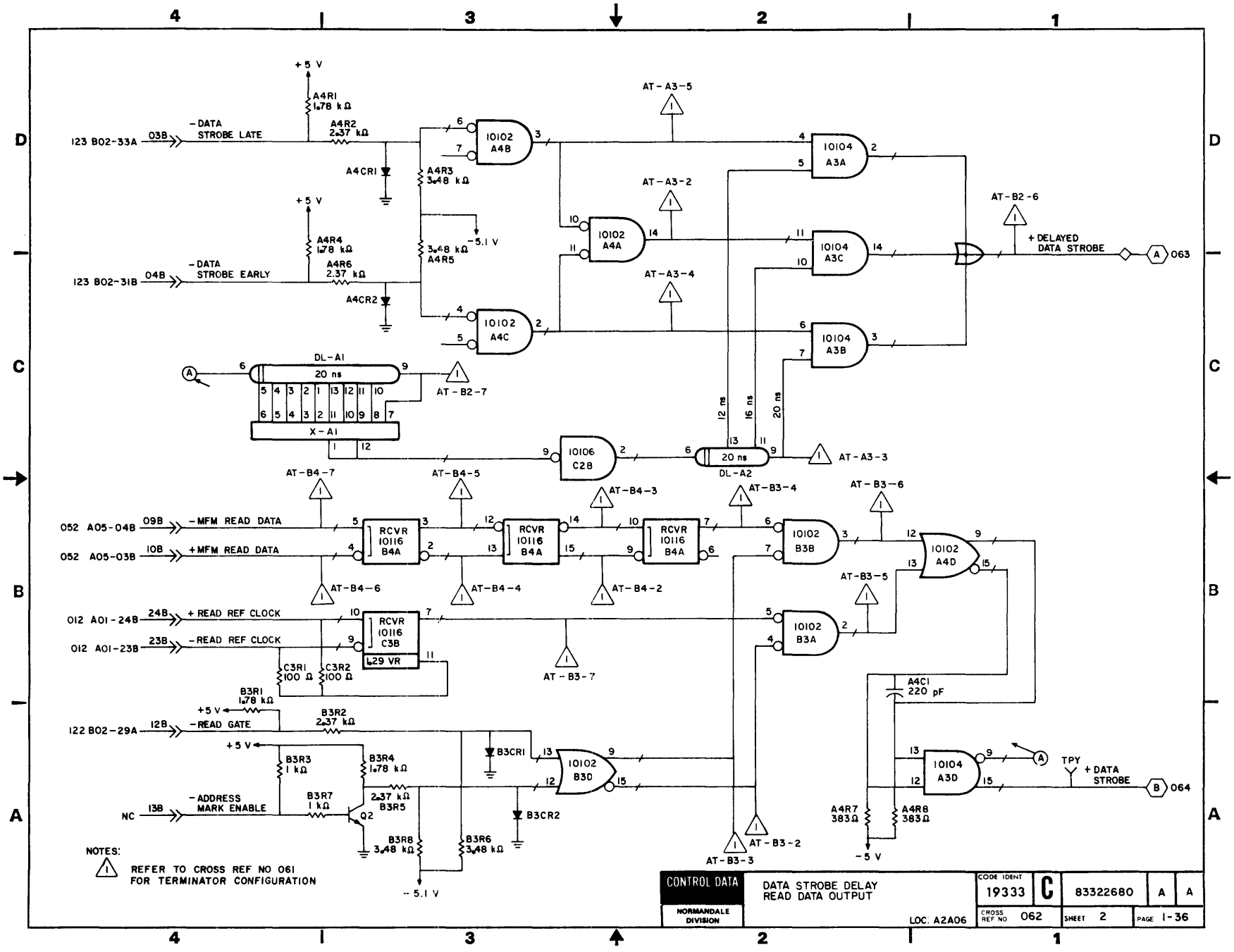
+5 V
A4R1 1.78 kΩ
A4R2 2.37 kΩ
123 B02-33A
03B
- DATA STROBE LATE
A4CR1
A4R3 3.48 kΩ
10102 A4B
AT-A3-5
10104 A3A
AT-A3-2
10102 A4A
AT-B2-6
+ DELAYED DATA STROBE
A 063
+5 V
A4R4 1.78 kΩ
A4R6 2.37 kΩ
123 B02-31B
04B
- DATA STROBE EARLY
A4CR2
3.48 kΩ A4R5
-5.1 V
AT-A3-4
10102 A4C
10104 A3C
10104 A3B
DL-A1
20 ns
X-A1
AT-B2-7
10106 C2B
12 ns
16 ns
20 ns
20 ns DL-A2
AT-A3-3
AT-B4-7
AT-B4-5
AT-B4-3
AT-B3-4
AT-B3-6
052 A05-04B
09B
- MFM READ DATA
052 A05-03B
10B
+ MFM READ DATA
RCVR 10116 B4A
RCVR 10116 B4A
RCVR 10116 B4A
10102 B3B
10102 A4D
AT-B4-6
AT-B4-4
AT-B4-2
AT-B3-5
012 A01-24B
24B
+ READ REF CLOCK
012 A01-23B
23B
- READ REF CLOCK
RCVR 10116 C3B
L29 VR
C3R1 100 Ω
C3R2 100 Ω
AT-B3-7
10102 B3A
B3R1 1.78 kΩ
+5 V
122 B02-29A
12B
- READ GATE
B3R2 2.37 kΩ
A4C1 220 pF
+5 V
B3R3 1 kΩ
B3R4 1.78 kΩ
B3CR1
10102 B3D
10104 A3D
TPY
+ DATA STROBE
B 064
NC
13B
- ADDRESS MARK ENABLE
B3R7 1 kΩ
2.37 kΩ B3R5
Q2
B3CR2
A4R7 383Ω
A4R8 383Ω
B3R8 3.48 kΩ
B3R6 3.48 kΩ
AT-B3-2
AT-B3-3
-5 V
-5.1 V
NOTES:
1 REFER TO CROSS REF NO 061 FOR TERMINATOR CONFIGURATION
CONTROL DATA
NORMANDALE DIVISION
DATA STROBE DELAY
READ DATA OUTPUT
LOC: A2A06
CODE IDENT 19333
C
83322680
A
A
CROSS REF NO 062
SHEET 2
PAGE 1-36

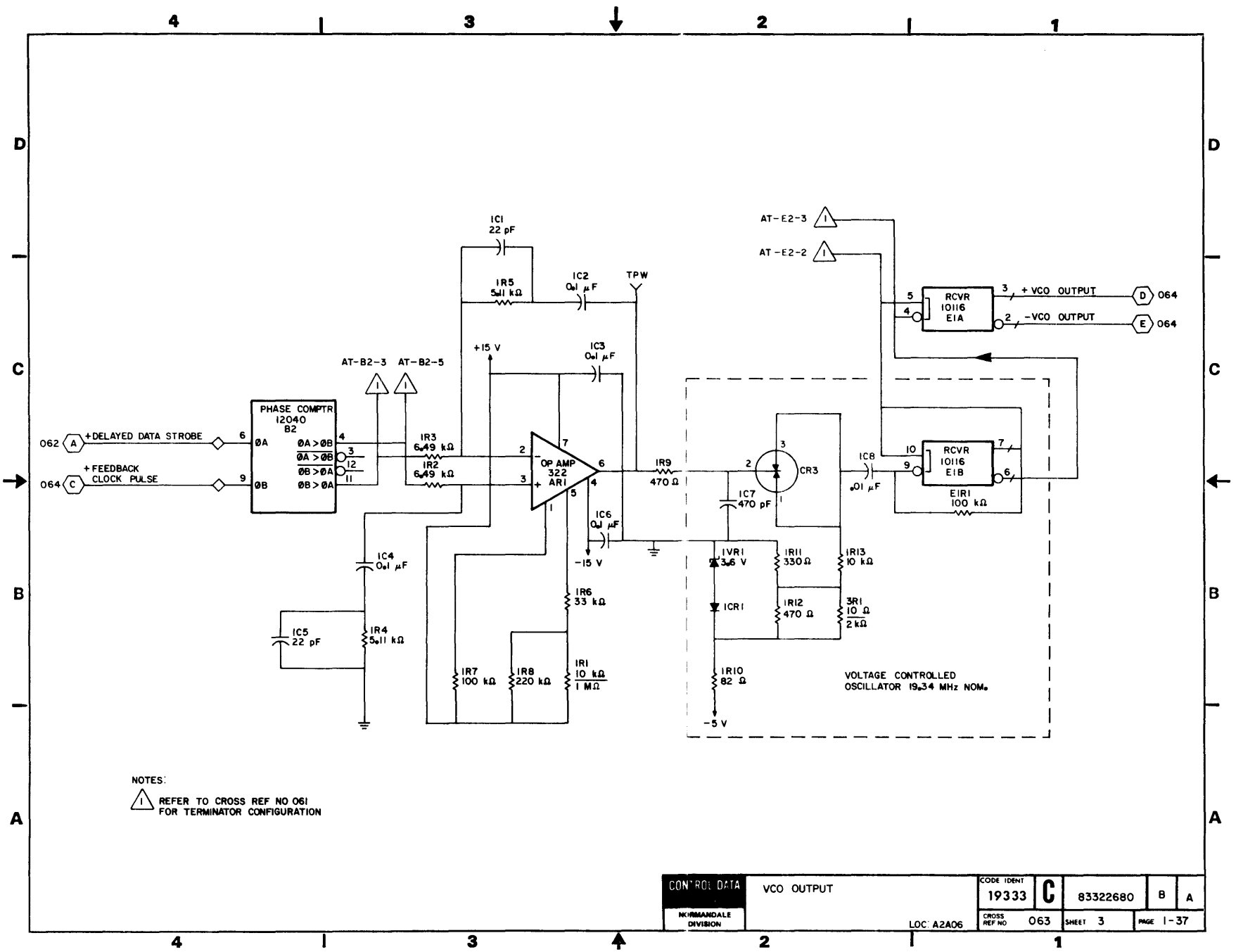

CONTROL DATA	VCO OUTPUT	CODE IDENT 19333	C	83322680	B	A
NORMANDALE DIVISION	LOC: A2A06	CROSS REF NO 063	SHEET 3	PAGE 1-37		

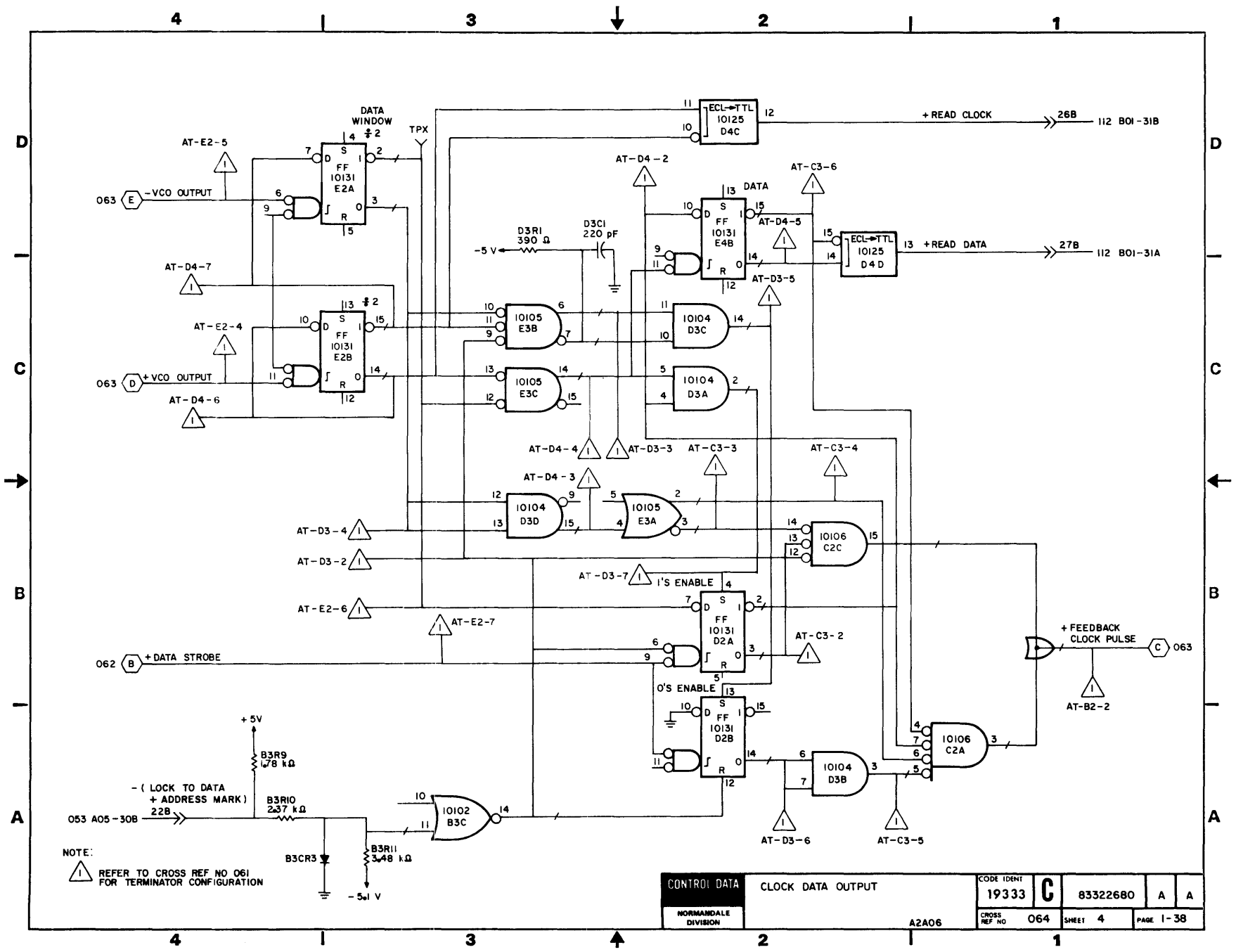
DATA WINDOW ÷2
TPX
AT-E2-5
063 E -VCO OUTPUT
FF 10131 E2A
AT-D4-7
AT-E2-4
063 D +VCO OUTPUT
FF 10131 E2B
AT-D4-6
ECL→TTL 10125 D4C
+READ CLOCK
26B
112 B01-31B
AT-D4-2
AT-C3-6
DATA
D3R1 390 Ω
D3C1 220 pF
-5 V
FF 10131 E4B
AT-D4-5
ECL→TTL 10125 D4D
13 +READ DATA
27B
112 B01-31A
AT-D3-5
10105 E3B
10104 D3C
10105 E3C
10104 D3A
AT-D4-4
AT-D3-3
AT-C3-3
AT-C3-4
AT-D4-3
10104 D3D
10105 E3A
AT-D3-4
AT-D3-2
10106 C2C
AT-D3-7
1'S ENABLE
AT-E2-6
AT-E2-7
FF 10131 D2A
062 B +DATA STROBE
AT-C3-2
+FEEDBACK CLOCK PULSE
C 063
AT-B2-2
0'S ENABLE
FF 10131 D2B
10106 C2A
10104 D3B
AT-D3-6
AT-C3-5
+5V
B3R9 1.78 kΩ
- (LOCK TO DATA + ADDRESS MARK)
B3R10 2.37 kΩ
22B
053 A05-30B
10102 B3C
B3CR3
B3R11 3.48 kΩ
-5.1 V
NOTE:
1 REFER TO CROSS REF NO 061 FOR TERMINATOR CONFIGURATION
CONTROL DATA
NORMANDALE DIVISION
CLOCK DATA OUTPUT
A2A06
CODE IDENT 19333
C
83322680
A
A
CROSS REF NO 064
SHEET 4
PAGE 1-38

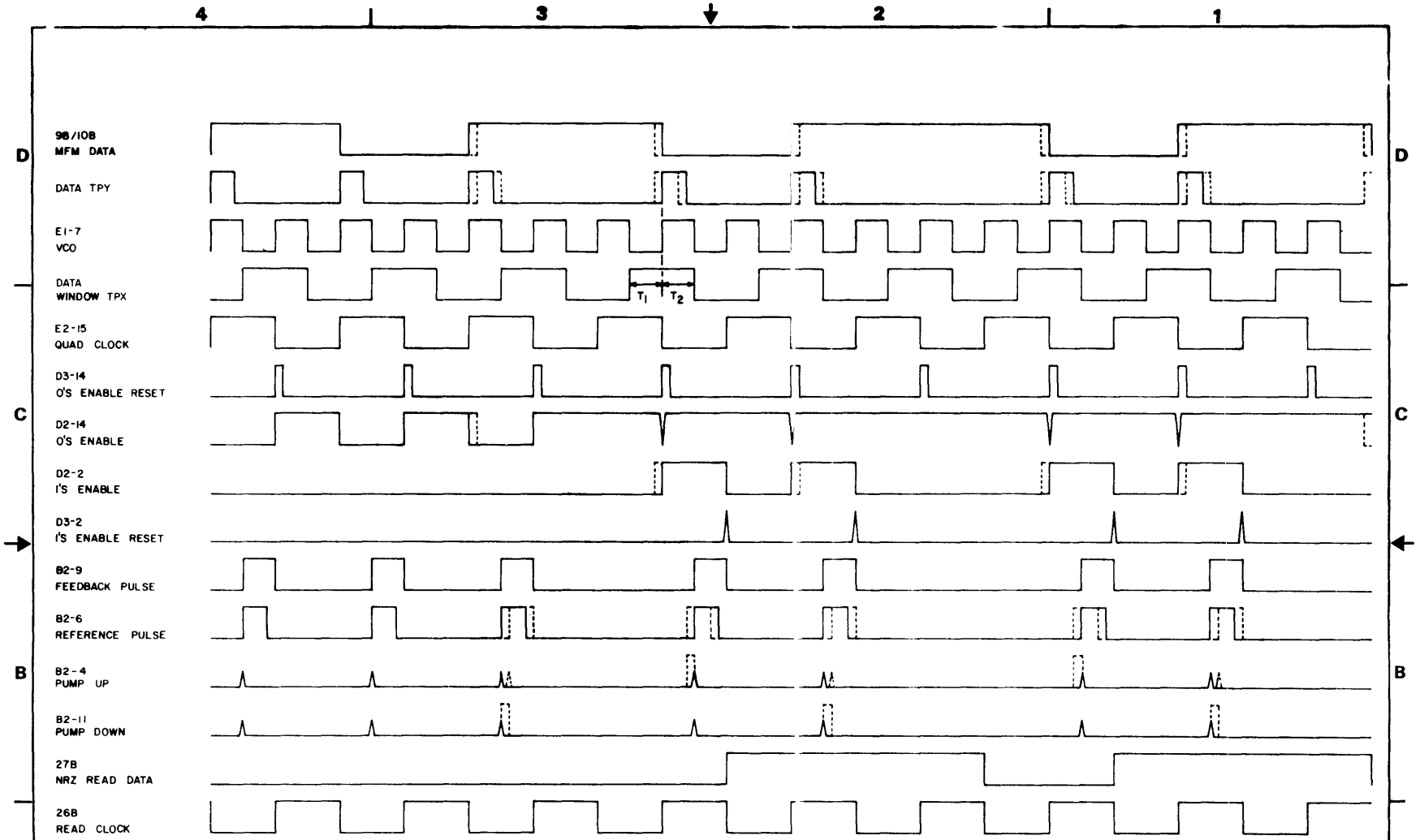

NOTE

1. DASHED LINES INDICATE PEAK SHIFTED DATA.
2. $T_1 \simeq T_2 \simeq$ 25NS WHEN STROBE PULSE IS CENTERED IN WINDOW $(T_1 + T_2)$.
3. $T_{RISE} = T_{FALL} \simeq$ 3NS.

CONTROL DATA NORMANDALE D VISION	READ PLO TIMING DIAGRAM LOC A2A06	CODE IDENT 19333	C	83322680	A	A
		CROSS REF NO 065		SHEET 5	PAGE 1-39/40	

REVISION STATUS OF SHEETS

1	2	3	4	5	6	7	8	9	10	11	12	13	14	15	16	17	18	19	20
A	A	A																	

REVISIONS

REV	ECO	DESCRIPTION	DRFT	DATE	CHK'D
A		RELEASED			

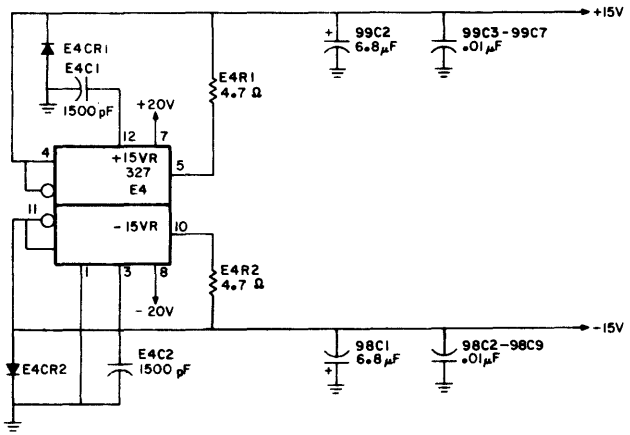

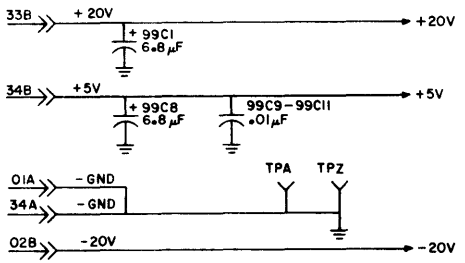

DRAWN	W. Bergstein	3-7-77	CONTROL DATA	D/A FUNCTION GENERATOR DIAGRAMS	CODE IDENT 19333	C	83322680	A A
CHECKED								
ENGINEER			NORMANDALE DIVISION	TYPE: JLQV LOC: A2A07	CROSS REF NO 071		SHEET 1 OF 3	PAGE 1-41
APPROVED								

REF 83215707

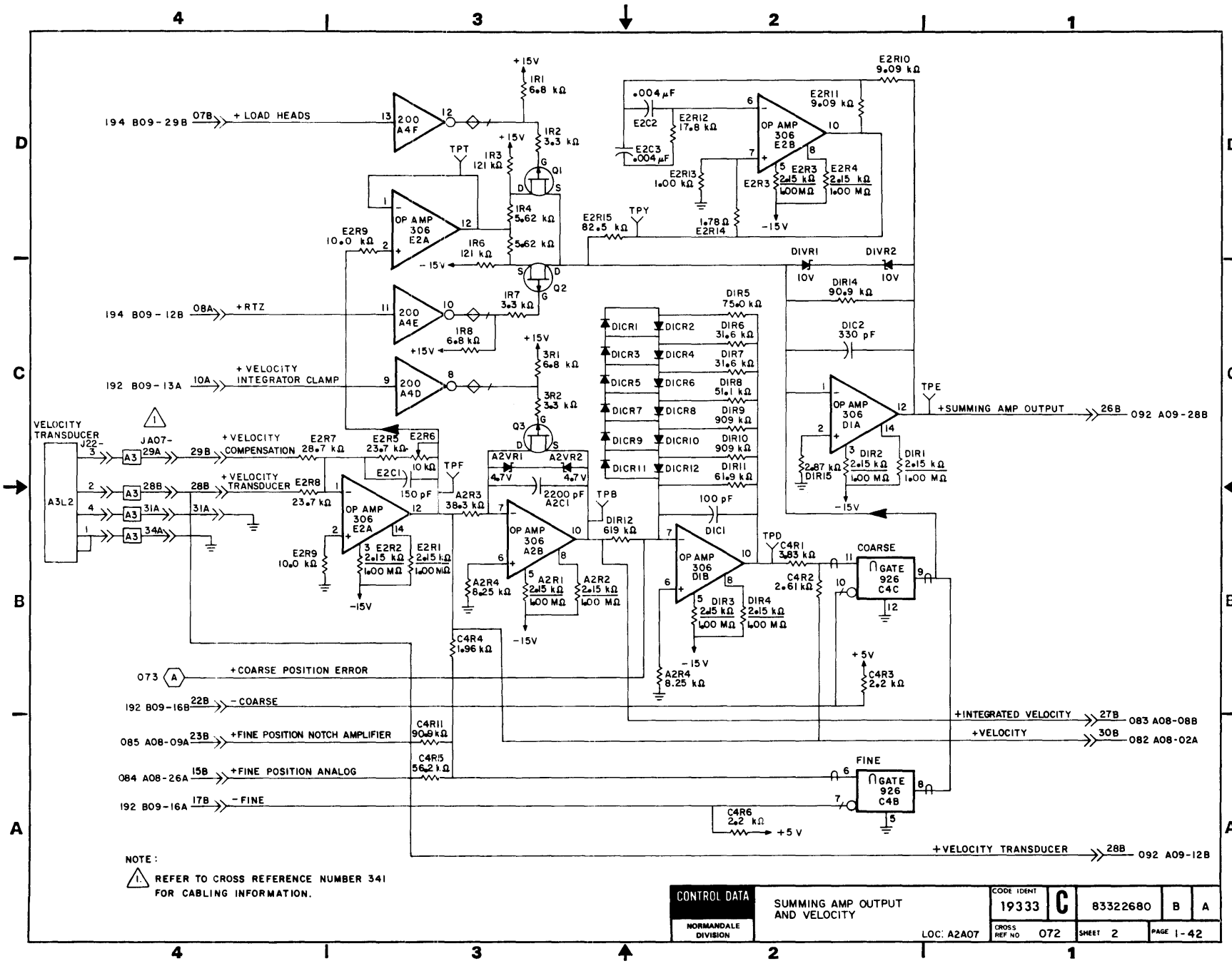
+15V
1R1 6.8 kΩ
194 B09-29B 07B + LOAD HEADS
200 A4F
1R2 3.3 kΩ
TPT
1R3 121 kΩ
Q1
1R4 5.62 kΩ
5.62 kΩ
OP AMP 306 E2A
E2R9 10.0 kΩ
1R6 121 kΩ
-15V
Q2
194 B09-12B 08A +RTZ
200 A4E
1R7 3.3 kΩ
1R8 6.8 kΩ
192 B09-13A 10A + VELOCITY INTEGRATOR CLAMP
200 A4D
3R1 6.8 kΩ
3R2 3.3 kΩ
Q3
VELOCITY TRANSDUCER
A3L2
J22-
JA07-
29A 29B + VELOCITY COMPENSATION
28A 28B + VELOCITY TRANSDUCER
31A 31B
34A
E2R7 28.7 kΩ
E2R5 23.7 kΩ
E2R6 10 kΩ
E2C1 150 pF
OP AMP 306 E2A
E2R2 2.15 kΩ 100 MΩ
E2R1 2.15 kΩ 100 MΩ
TPF
A2R3 38.3 kΩ
A2VR1 4.7V
A2VR2 4.7V
2200 pF A2C1
OP AMP 306 A2B
A2R4 8.25 kΩ
A2R1 2.15 kΩ 100 MΩ
A2R2 2.15 kΩ 100 MΩ
TPB
DIR12 619 kΩ
100 pF DIC1
OP AMP 306 D1B
DIR3 2.15 kΩ 100 MΩ
DIR4 2.15 kΩ 100 MΩ
A2R4 8.25 kΩ
C4R4 1.96 kΩ
C4R1 3.83 kΩ
C4R2 2.61 kΩ
TPD
COARSE
GATE 926 C4C
C4R3 2.2 kΩ
+5V
C4R6 2.2 kΩ
FINE
GATE 926 C4B
DICR1 DICR2 DICR3 DICR4 DICR5 DICR6 DICR7 DICR8 DICR9 DICR10 DICR11 DICR12
DIR5 75.0 kΩ
DIR6 31.6 kΩ
DIR7 31.6 kΩ
DIR8 51.1 kΩ
DIR9 909 kΩ
DIR10 909 kΩ
DIR11 61.9 kΩ
DIVR1 10V
DIVR2 10V
DIR14 90.9 kΩ
DIC2 330 pF
OP AMP 306 D1A
DIR2 2.15 kΩ 100 MΩ
DIR1 2.15 kΩ 100 MΩ
2.87 kΩ DIR15
TPE
+SUMMING AMP OUTPUT 26B 092 A09-28B
.004 μF E2C2
E2R12 17.8 kΩ
E2C3 .004 μF
OP AMP 306 E2B
E2R11 9.09 kΩ
E2R10 9.09 kΩ
E2R3 2.15 kΩ 100 MΩ
E2R4 2.15 kΩ 100 MΩ
E2R13 1.00 kΩ
1.78Ω E2R14
E2R15 82.5 kΩ
TPY
073 A +COARSE POSITION ERROR
192 B09-16B 22B -COARSE
085 A08-09A 23B +FINE POSITION NOTCH AMPLIFIER
C4R11 90.9 kΩ
C4R5 56.2 kΩ
084 A08-26A 15B +FINE POSITION ANALOG
192 B09-16A 17B -FINE
+INTEGRATED VELOCITY 27B 083 A08-08B
+VELOCITY 30B 082 A08-02A
+VELOCITY TRANSDUCER 28B 092 A09-12B
NOTE:
1. REFER TO CROSS REFERENCE NUMBER 341 FOR CABLING INFORMATION.
CONTROL DATA
NORMANDALE DIVISION
SUMMING AMP OUTPUT AND VELOCITY
LOC: A2A07
CODE IDENT 19333
C
83322680
B
A
CROSS REF NO 072
SHEET 2
PAGE 1-42

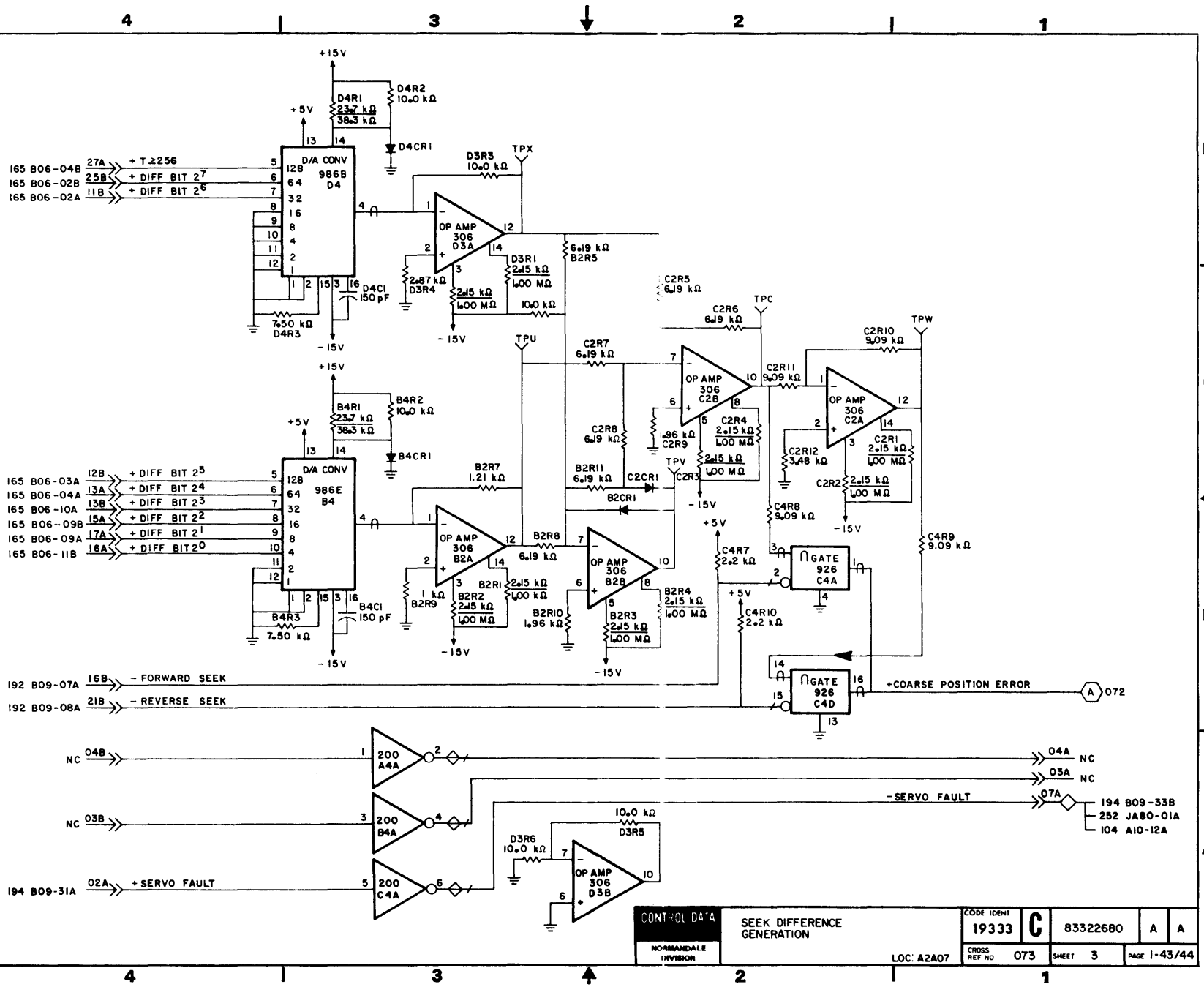
+15V
D4R1 23.7 kΩ 38.3 kΩ
D4R2 10.0 kΩ
D4CR1
+5V
D/A CONV 9868 D4
165 B06-04B 27A + T.2256
165 B06-02B 25B + DIFF BIT 2^7
165 B06-02A 11B + DIFF BIT 2^6
D3R3 10.0 kΩ
TPX
OP AMP 306 D3A
D3R1 2.15 kΩ 400 MΩ
2.87 kΩ D3R4
2.15 kΩ 400 MΩ
10.0 kΩ
6.19 kΩ B2R5
D4C1 150 pF
7.50 kΩ D4R3
-15V
C2R5 6.19 kΩ
C2R6 6.19 kΩ
TPC
C2R10 9.09 kΩ
TPW
TPU
C2R7 6.19 kΩ
OP AMP 306 C2B
OP AMP 306 C2A
C2R11 9.09 kΩ
C2R8 6.19 kΩ
.96 kΩ C2R9
C2R4 2.15 kΩ 400 MΩ
2.15 kΩ 400 MΩ
C2R12 3.48 kΩ
C2R1 2.15 kΩ 400 MΩ
C2R2 2.15 kΩ 400 MΩ
B4R1 23.7 kΩ 38.3 kΩ
B4R2 10.0 kΩ
B4CR1
D/A CONV 986E B4
165 B06-03A 12B + DIFF BIT 2^5
165 B06-04A 13A + DIFF BIT 2^4
165 B06-10A 13B + DIFF BIT 2^3
165 B06-09B 15A + DIFF BIT 2^2
165 B06-09A 17A + DIFF BIT 2^1
165 B06-11B 16A + DIFF BIT 2^0
B2R7 1.21 kΩ
B2R11 6.19 kΩ
C2CR1
B2CR1
TPV
C2R3
C4R8 9.09 kΩ
C4R9 9.09 kΩ
OP AMP 306 B2A
OP AMP 306 B2B
B2R8 6.19 kΩ
1 kΩ B2R9
B2R1 2.15 kΩ 400 kΩ
B2R2 2.15 kΩ 400 MΩ
B2R10 1.96 kΩ
B2R3 2.15 kΩ 400 MΩ
B2R4 2.15 kΩ 400 MΩ
B4R3 7.50 kΩ
B4C1 150 pF
C4R7 2.2 kΩ
C4R10 2.2 kΩ
NGATE 926 C4A
NGATE 926 C4D
192 B09-07A 16B - FORWARD SEEK
192 B09-08A 21B - REVERSE SEEK
+COARSE POSITION ERROR
A 072
NC 04B
200 A4A
04A NC
NC 03B
200 B4A
03A NC
-SERVO FAULT
07A
194 B09-33B
252 JA80-01A
104 A10-12A
10.0 kΩ D3R5
D3R6 10.0 kΩ
OP AMP 306 D3B
194 B09-31A 02A +SERVO FAULT
200 C4A
CONTROL DATA
NORMANDALE DIVISION
SEEK DIFFERENCE GENERATION
LOC: A2A07
CODE IDENT 19333
C
83322680
A
A
CROSS REF NO 073
SHEET 3
PAGE 1-43/44

REVISION STATUS OF SHEETS

1	2	3	4	5	6	7	8	9	10	11	12	13	14	15	16	17	18	19	20
A	A	A	A	A															

REVISIONS

REV.	ECO.	DESCRIPTION	DRFT.	DATE	CHK'D
A	PE23000	RELEASED			

UNUSED LOGIC ELEMENT

TYPE	LOCATION	OUTPUT PIN(S)
200	E1	2

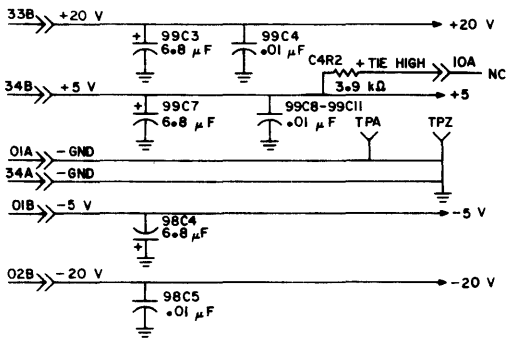

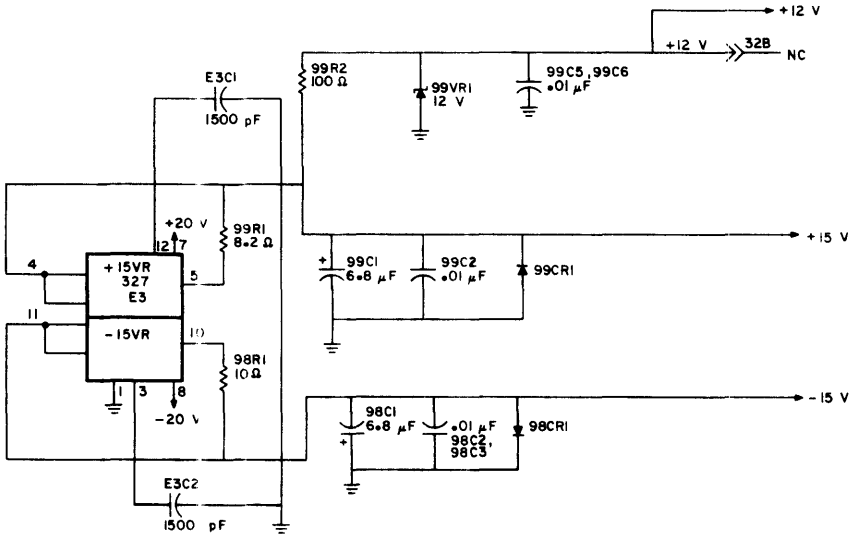

DRAWN	M Gibson	7-7-77	CONTROL DATA	ACCESS CONTROL NO. 2 DIAGRAMS	CODE IDENT 19333	C	83322680	A	A
CHECKED			NORMANDALE DIVISION		CROSS REF NO 081		SHEET 1 OF 5	PAGE 1-45	
ENGINEER				TYPE: ELUV LOC: A2A08					
APPROVED									

REF 83215708

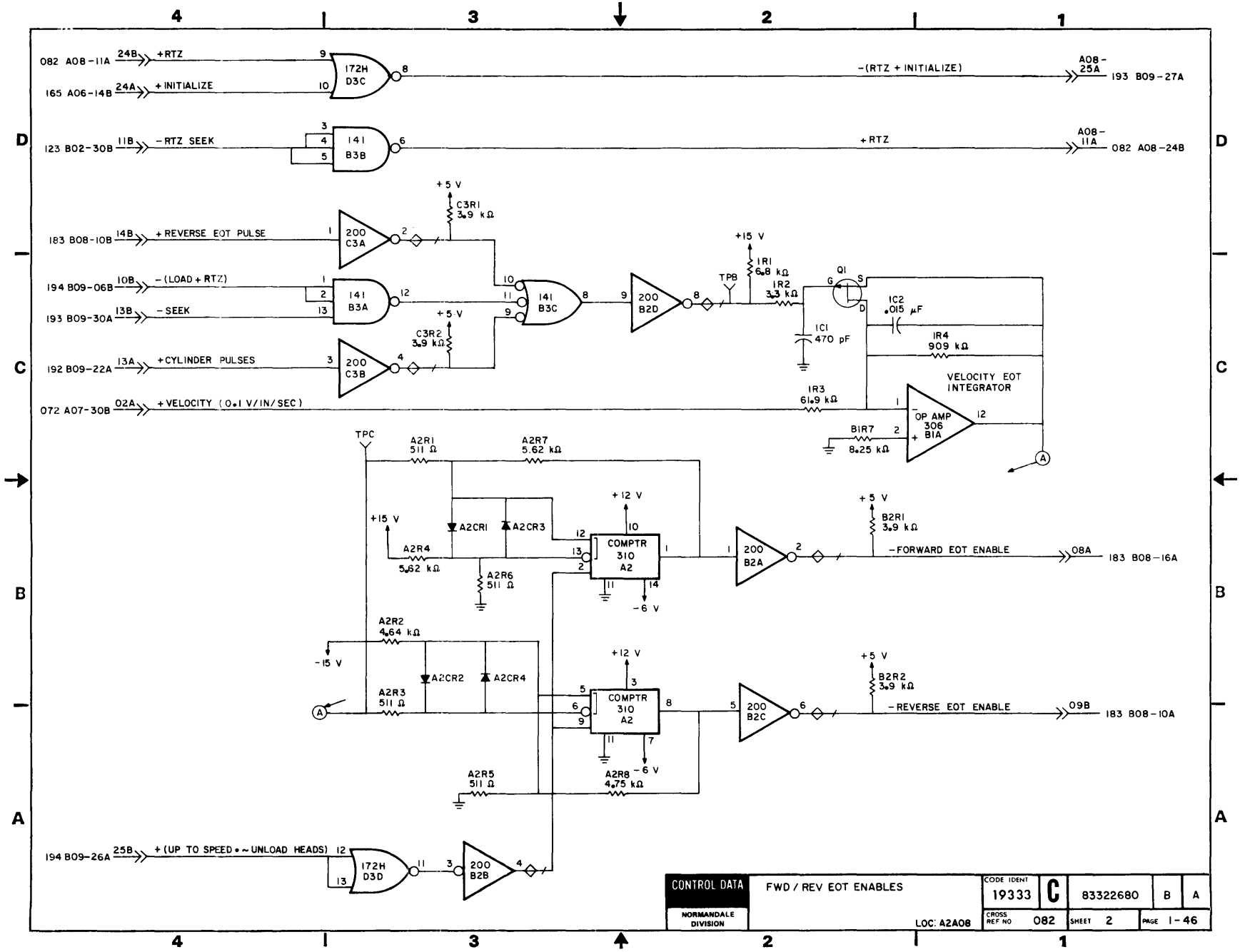
082 A08-11A 24B +RTZ
165 A06-14B 24A +INITIALIZE
172H D3C
-(RTZ + INITIALIZE)
A08-25A
193 B09-27A
123 B02-30B 11B -RTZ SEEK
141 B3B
+RTZ
A08-11A
082 A08-24B
+5 V
C3R1 3.9 kΩ
183 B08-10B 14B +REVERSE EOT PULSE
200 C3A
194 B09-06B 10B -(LOAD + RTZ)
193 B09-30A 13B -SEEK
141 B3A
141 B3C
C3R2 3.9 kΩ
192 B09-22A 13A +CYLINDER PULSES
200 C3B
072 A07-30B 02A +VELOCITY (0.1 V/IN/SEC)
200 B2D
+15 V
1R1 6.8 kΩ
1R2 3.3 kΩ
TPB
Q1
1C1 470 pF
1C2 .015 μF
1R4 909 kΩ
1R3 61.9 kΩ
VELOCITY EOT INTEGRATOR
OP AMP 306 B1A
B1R7 8.25 kΩ
TPC
A2R1 511 Ω
A2R7 5.62 kΩ
A2CR1
A2CR3
A2R4 5.62 kΩ
A2R6 511 Ω
COMPTR 310 A2
+12 V
-6 V
200 B2A
B2R1 3.9 kΩ
-FORWARD EOT ENABLE
08A
183 B08-16A
A2R2 4.64 kΩ
-15 V
A2CR2
A2CR4
A2R3 511 Ω
A2R5 511 Ω
A2R8 4.75 kΩ
200 B2C
B2R2 3.9 kΩ
-REVERSE EOT ENABLE
09B
183 B08-10A
194 B09-26A 25B +(UP TO SPEED • ~UNLOAD HEADS)
172H D3D
200 B2B
CONTROL DATA
NORMANDALE DIVISION
FWD / REV EOT ENABLES
LOC: A2A08
CODE IDENT 19333
C
83322680
B
A
CROSS REF NO 082
SHEET 2
PAGE 1-46

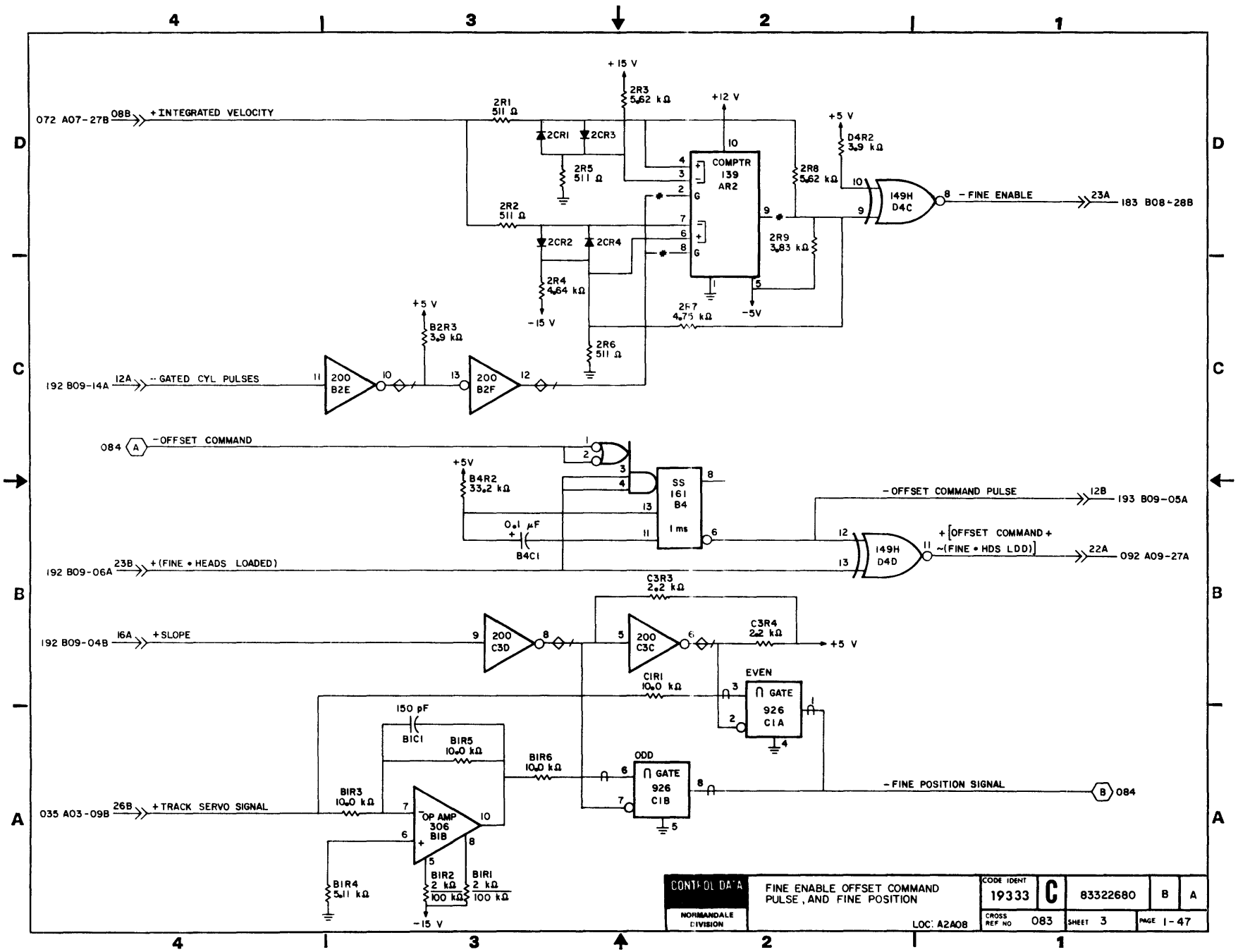
+15 V
2R3 5.62 kΩ
+12 V
+5 V
D4R2 3.9 kΩ
072 A07-27B 08B +INTEGRATED VELOCITY
2R1 511 Ω
2CR1
2CR3
2R5 511 Ω
COMPTR 139 AR2
2R8 5.62 kΩ
149H D4C
8 -FINE ENABLE
23A
183 B08-28B
2R2 511 Ω
2CR2
2CR4
2R9 3.83 kΩ
2R4 4.64 kΩ
-15 V
-5V
2R7 4.75 kΩ
+5 V
B2R3 3.9 kΩ
2R6 511 Ω
192 B09-14A 12A -GATED CYL PULSES
200 B2E
200 B2F
084 A -OFFSET COMMAND
+5V
B4R2 33.2 kΩ
SS 161 B4
1 ms
0.1 μF
B4C1
-OFFSET COMMAND PULSE
12B
193 B09-05A
+[OFFSET COMMAND + ~(FINE • HDS LDD)]
22A
092 A09-27A
192 B09-06A 23B +(FINE • HEADS LOADED)
149H D4D
C3R3 2.2 kΩ
192 B09-04B 16A +SLOPE
200 C3D
200 C3C
C3R4 2.2 kΩ
+5 V
EVEN
C1R1 10.0 kΩ
∩ GATE 926 C1A
150 pF
B1C1
B1R5 10.0 kΩ
B1R6 10.0 kΩ
ODD
∩ GATE 926 C1B
-FINE POSITION SIGNAL
B 084
035 A03-09B 26B +TRACK SERVO SIGNAL
B1R3 10.0 kΩ
OP AMP 306 B1B
B1R4 5.11 kΩ
B1R2 2 kΩ 100 kΩ
B1R1 2 kΩ 100 kΩ
-15 V
CONTROL DATA
NORMANDALE DIVISION
FINE ENABLE OFFSET COMMAND PULSE, AND FINE POSITION
LOC: A2A08
CODE IDENT 19333
C
83322680
B
A
CROSS REF NO 083
SHEET 3
PAGE 1-47

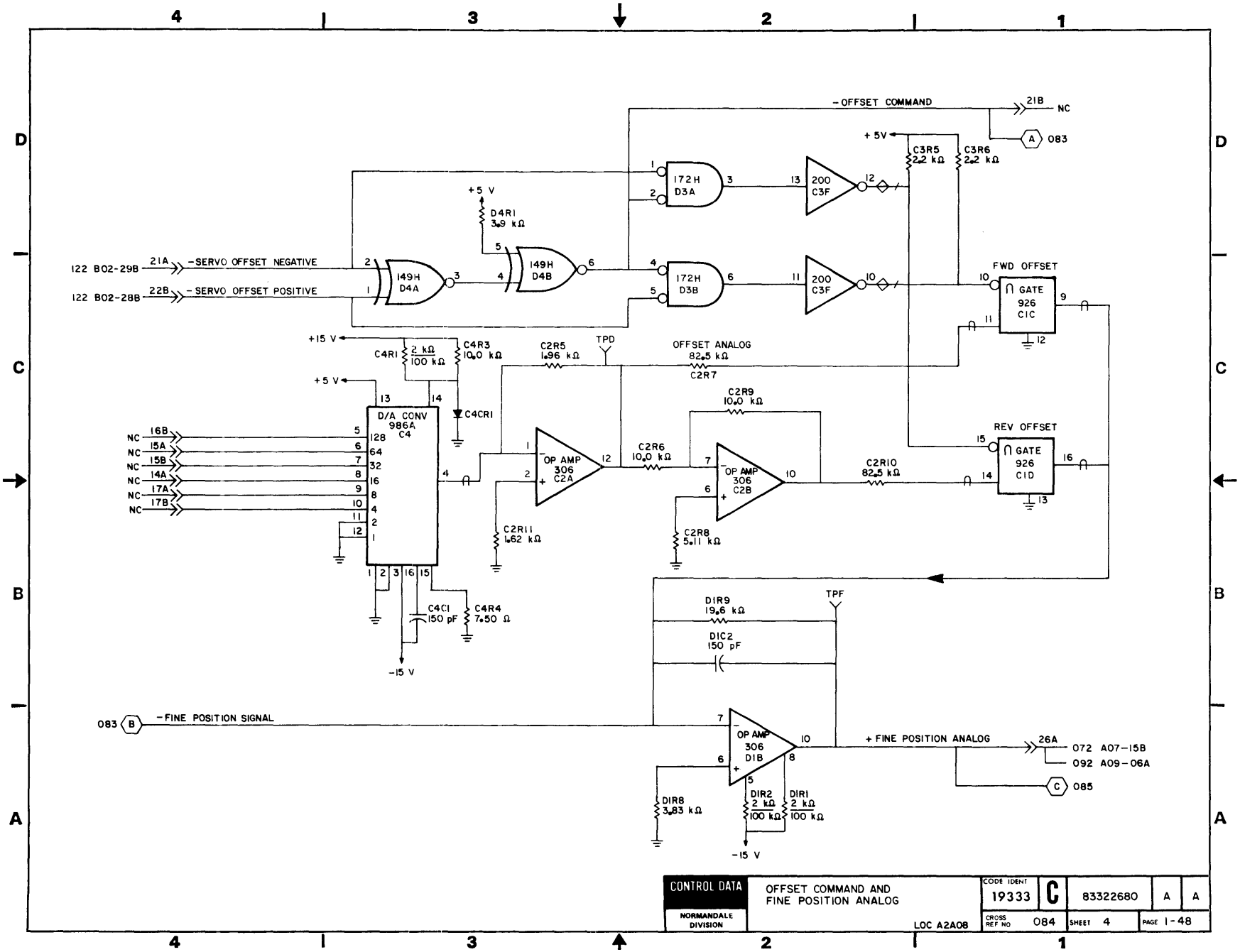

CONTROL DATA	OFFSET COMMAND AND FINE POSITION ANALOG	CODE IDENT 19333	C	83322680	A A
NORMANDALE DIVISION	LOC A2A08	CROSS REF NO 084		SHEET 4	PAGE 1-48

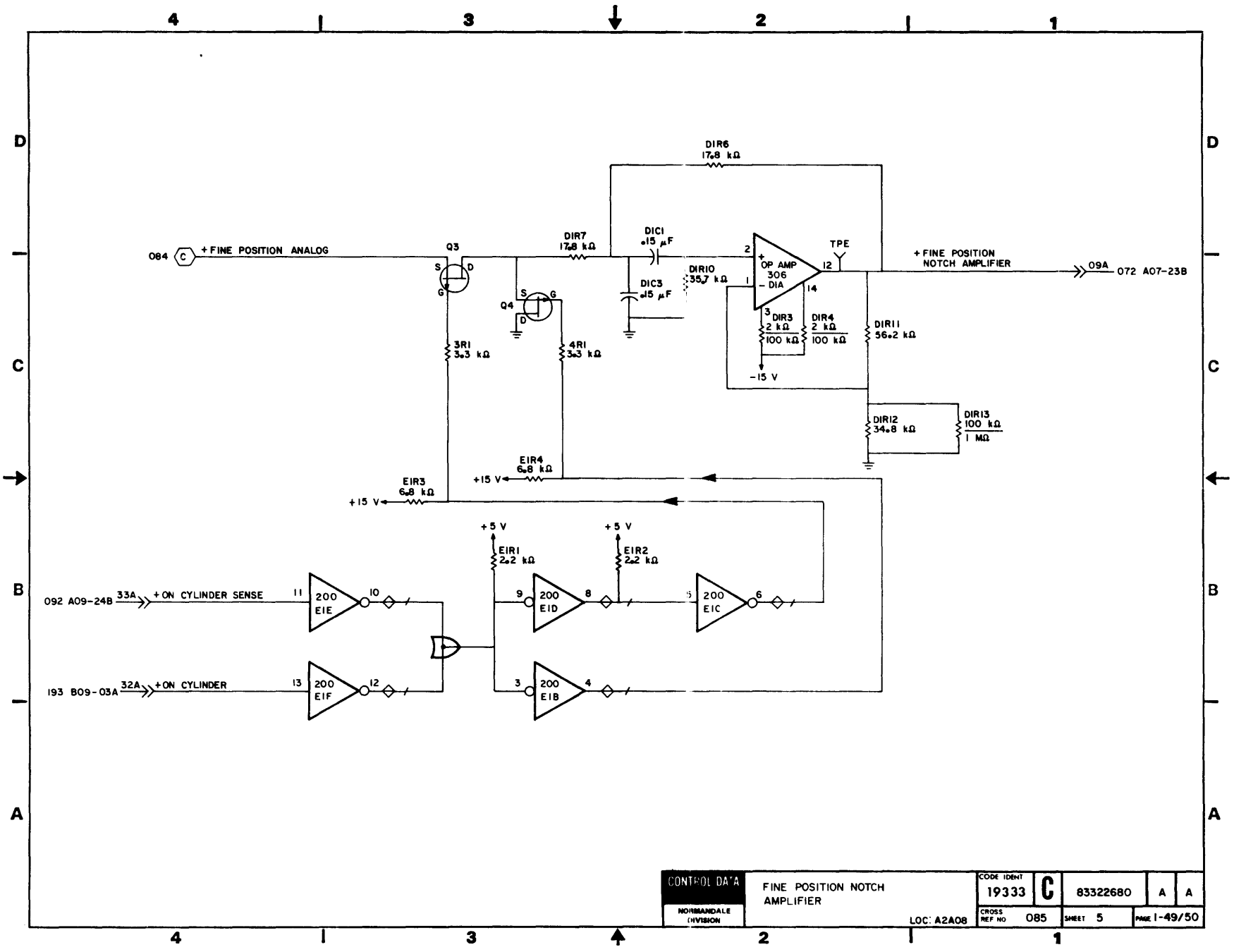
4
3
2
1
D
C
B
A
DIR6
17.8 kΩ
DIR7
17.8 kΩ
DIC1
.15 μF
DIC3
.15 μF
DIR10
35.7 kΩ
Q3
Q4
084 C
+FINE POSITION ANALOG
OP AMP
306
- DIA
TPE
+FINE POSITION
NOTCH AMPLIFIER
09A
072 A07-23B
DIR3
2 kΩ
100 kΩ
DIR4
2 kΩ
100 kΩ
DIR11
56.2 kΩ
-15 V
3RI
3.3 kΩ
4RI
3.3 kΩ
DIR12
34.8 kΩ
DIR13
100 kΩ
1 MΩ
EIR4
6.8 kΩ
+15 V
EIR3
6.8 kΩ
+15 V
+5 V
EIR1
2.2 kΩ
+5 V
EIR2
2.2 kΩ
092 A09-24B
33A
+ON CYLINDER SENSE
200
EIE
200
EID
200
EIC
193 B09-03A
32A
+ON CYLINDER
200
EIF
200
EIB
CONTROL DATA
NORMANDALE DIVISION
FINE POSITION NOTCH
AMPLIFIER
LOC: A2A08
CODE IDENT
19333
C
83322680
A
A
CROSS REF NO
085
SHEET 5
PAGE 1-49/50

REVISION STATUS OF SHEETS																			
1	2	3	4	5	6	7	8	9	10	11	12	13	14	15	16	17	18	19	20
A	A	A																	

REVISIONS					
REV.	ECO.	DESCRIPTION	DRFT.	DATE	CHK'D
A	PE23000	RELEASED			

UNUSED LOGIC ELEMENTS

TYPE	LOCATION	OUTPUT PIN (S)
140	D2	3,6
200	E1	6,12
306	A1	12

NOTE:

1. REFER TO CROSS REFERENCE NUMBER 341 FOR CABLING INFORMATION

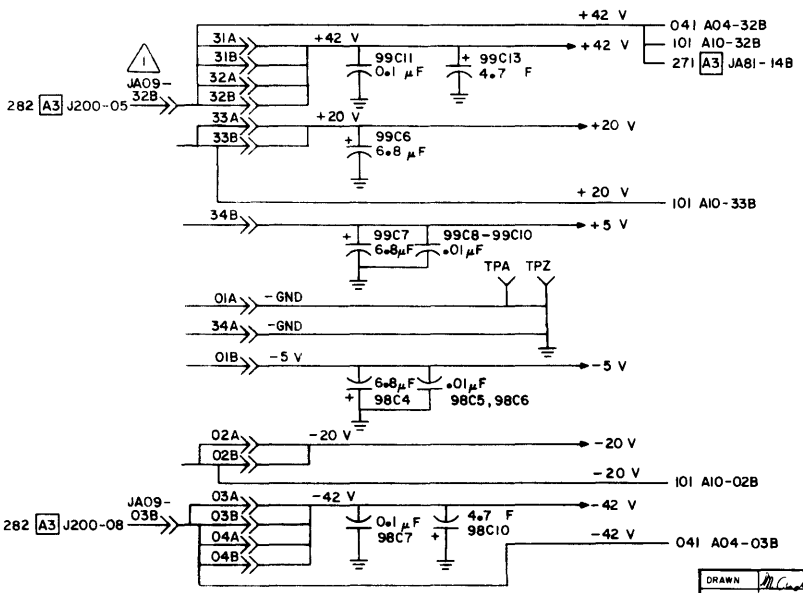

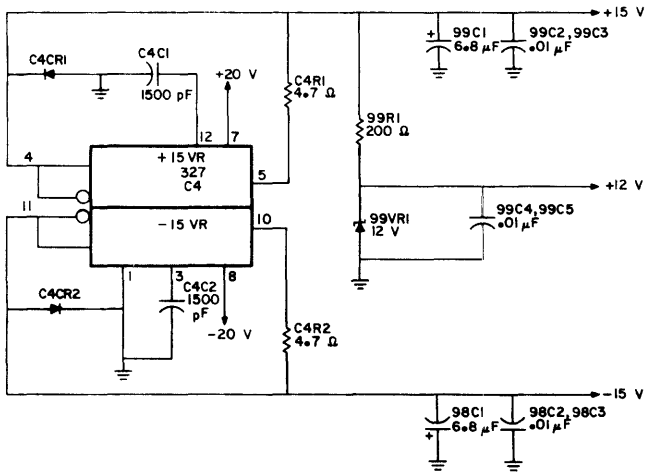

DRAWN	M. Cadwer	3-8-77	CONTROL DATA	SWITCHING MODE CONTROL DIAGRAMS	CODE IDENT 19333	C	83322680	B	A
CHECKED									
ENGINEER			NORMANDALE DIVISION	TYPE: FLPV LOC: A2A09	CROSS REF NO 091	SHEET 1 OF 3	PAGE 1-51
APPROVED									

REF 83215709

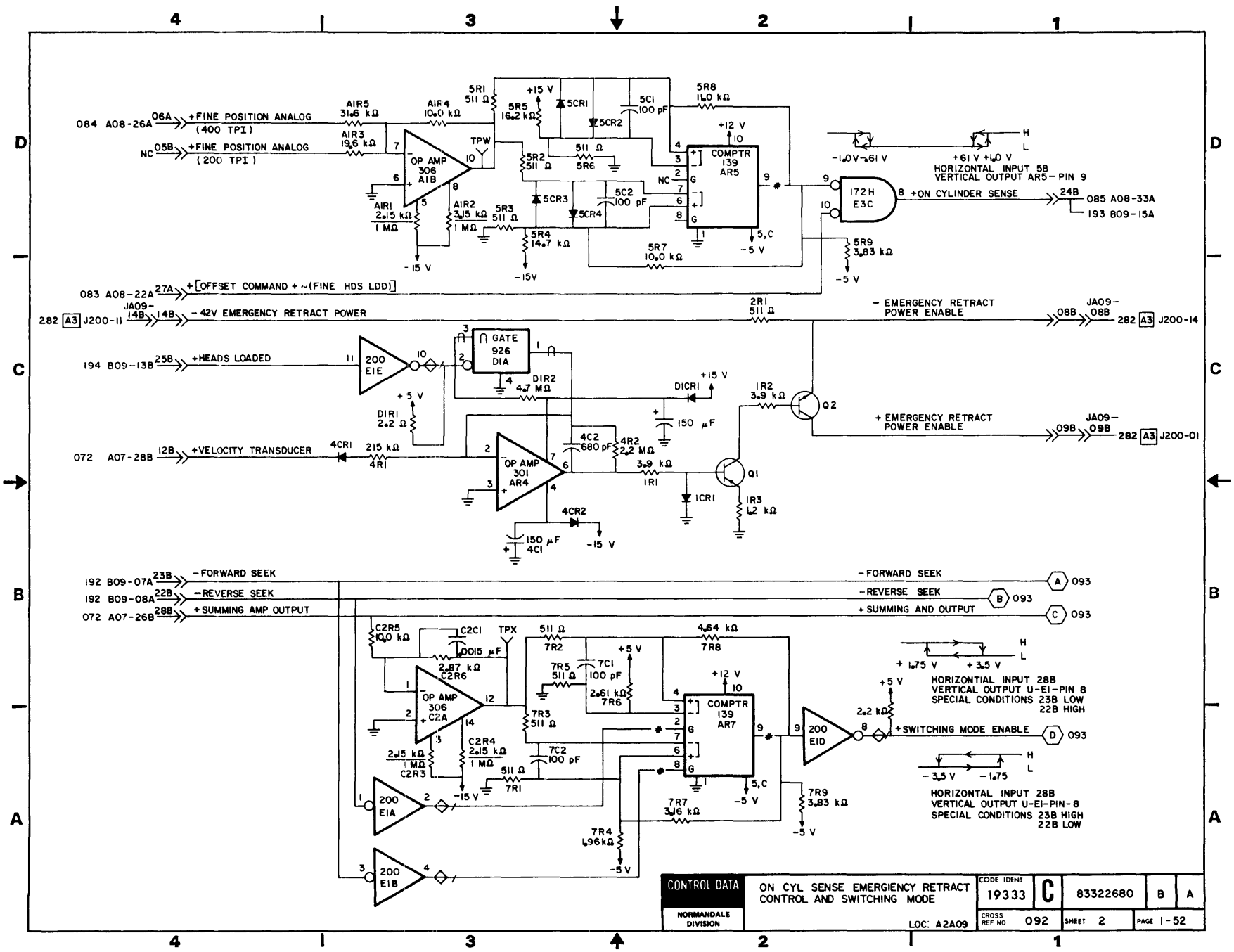
084 A08-26A 06A +FINE POSITION ANALOG (400 TPI)
NC 05B +FINE POSITION ANALOG (200 TPI)
AIR5 31.6 kΩ
AIR4 10.0 kΩ
AIR3 19.6 kΩ
AIR1 2.15 kΩ 1 MΩ
AIR2 3.15 kΩ 1 MΩ
5R1 511 Ω
5R5 16.2 kΩ
5R2 511 Ω
5R3 511 Ω
5R4 14.7 kΩ
5R6 511 Ω
5R7 10.0 kΩ
5R8 1.40 kΩ
5R9 3.83 kΩ
5C1 100 pF
5C2 100 pF
5CR1
5CR2
5CR3
5CR4
OP AMP 306 A1B
COMPTR 139 AR5
+15 V
+12 V
-15 V
-5 V
TPW
-1.0V→61 V
+61 V +1.0 V
HORIZONTAL INPUT 5B
VERTICAL OUTPUT AR5 - PIN 9
172H E3C
+ON CYLINDER SENSE
24B
085 A08-33A
193 B09-15A
083 A08-22A 27A +[OFFSET COMMAND + ~(FINE HDS LDD)]
282 A3 J200-11 JA09-14B 14B - 42V EMERGENCY RETRACT POWER
2R1 511 Ω
- EMERGENCY RETRACT POWER ENABLE
08B JA09-08B 282 A3 J200-14
194 B09-13B 25B +HEADS LOADED
200 E1E
GATE 926 D1A
DIR2 4.7 MΩ
DIR1 2.2 Ω
+5 V
DICR1
150 μF
1R2 3.9 kΩ
Q2
+ EMERGENCY RETRACT POWER ENABLE
09B JA09-09B 282 A3 J200-01
072 A07-28B 12B +VELOCITY TRANSDUCER
4CR1 215 kΩ 4R1
OP AMP 301 AR4
4C2 680 pF
4R2 2.2 MΩ
3.9 kΩ 1R1
Q1
1CR1
1R3 1.2 kΩ
4CR2
150 μF 4C1
-15 V
192 B09-07A 23B -FORWARD SEEK
192 B09-08A 22B -REVERSE SEEK
072 A07-26B 28B +SUMMING AMP OUTPUT
-FORWARD SEEK A 093
-REVERSE SEEK B 093
+SUMMING AND OUTPUT C 093
C2R5 10.0 kΩ
C2C1 .0015 μF
2.87 kΩ C2R6
C2R4 2.15 kΩ 1 MΩ
2.15 kΩ 1 MΩ C2R3
OP AMP 306 C2A
TPX
511 Ω 7R2
7R5 511 Ω
7C1 100 pF
2.61 kΩ 7R6
7R3 511 Ω
7C2 100 pF
511 Ω 7R1
4.64 kΩ 7R8
COMPTR 139 AR7
7R7 3.16 kΩ
7R4 1.96 kΩ
7R9 3.83 kΩ
200 E1A
200 E1B
200 E1D
+1.75 V +3.5 V
HORIZONTAL INPUT 28B
VERTICAL OUTPUT U-E1-PIN 8
SPECIAL CONDITIONS 23B LOW
22B HIGH
2.2 kΩ
+SWITCHING MODE ENABLE D 093
-3.5 V -1.75
HORIZONTAL INPUT 28B
VERTICAL OUTPUT U-E1-PIN-8
SPECIAL CONDITIONS 23B HIGH
22B LOW
CONTROL DATA
NORMANDALE DIVISION
ON CYL SENSE EMERGIENCY RETRACT CONTROL AND SWITCHING MODE
LOC: A2A09
CODE IDENT 19333
C
83322680
B
A
CROSS REF NO 092
SHEET 2
PAGE 1-52

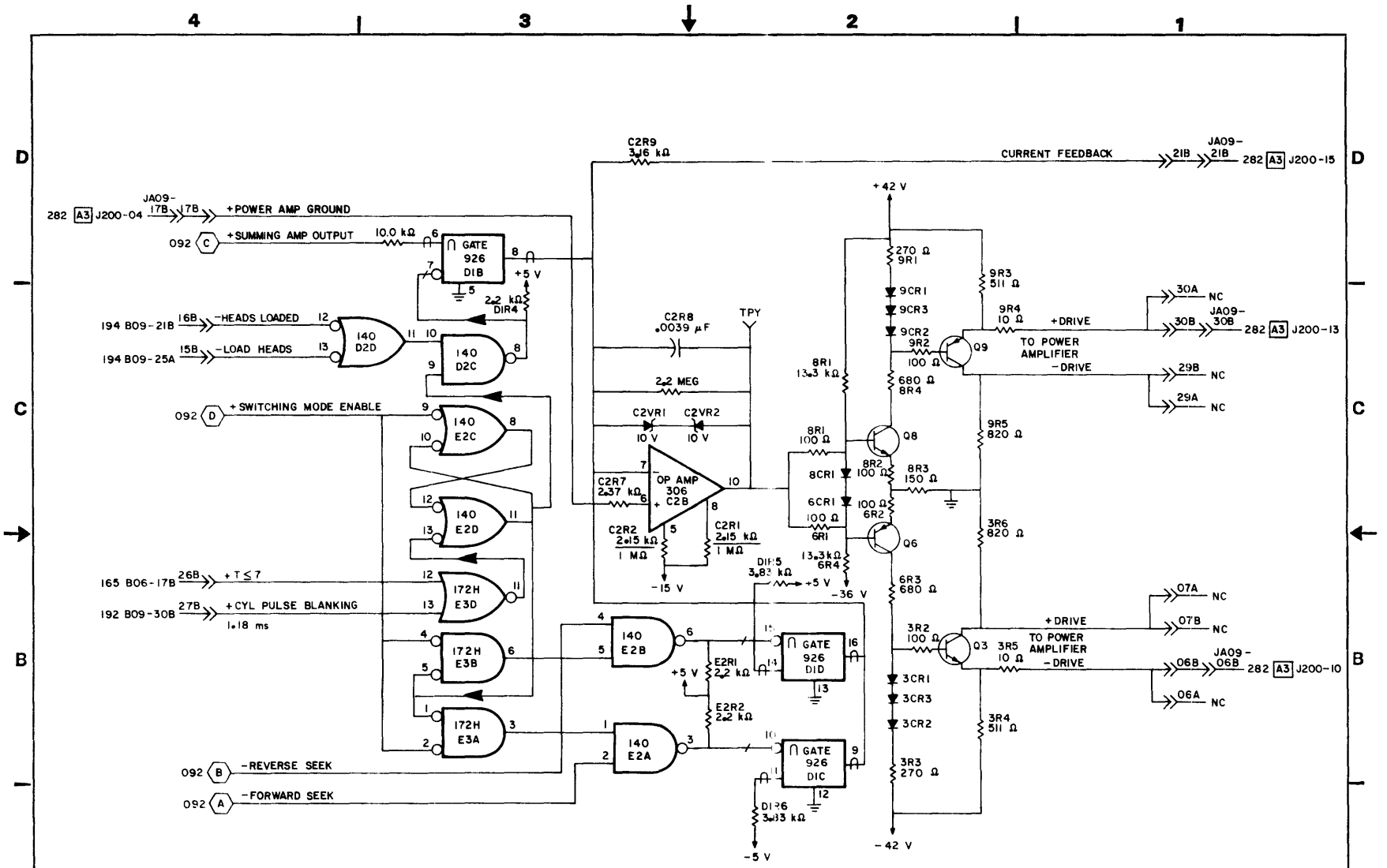
CURRENT FEEDBACK
+POWER AMP GROUND
+SUMMING AMP OUTPUT
-HEADS LOADED
-LOAD HEADS
+SWITCHING MODE ENABLE
+T≤7
+CYL PULSE BLANKING
1.18 ms
-REVERSE SEEK
-FORWARD SEEK
+DRIVE
-DRIVE
TO POWER AMPLIFIER
OP AMP 306 C2B
+42 V
-42 V
-36 V
-15 V
+5 V
-5 V
TPY
POWER AMPL CONTROL
LOC: A2A09
CONTROL DATA
NORMANDALE DIVISION
CODE IDENT 19333
83322680
CROSS REF NO 093
SHEET 3
PAGE 1-53/54

REVISION STATUS OF SHEETS																			
1	2	3	4	5	6	7	8	9	10	11	12	13	14	15	16	17	18	19	20
A	A	A	A																

REVISIONS					
REV.	ECO.	DESCRIPTION	DRFT.	DATE	CHK'D
A	PE23000	RELEASED			

LOCAL/ REMOTE SWITCH
ON CARD EDGE

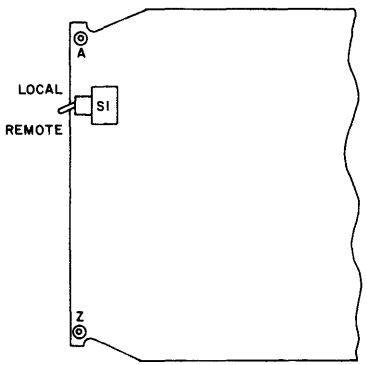

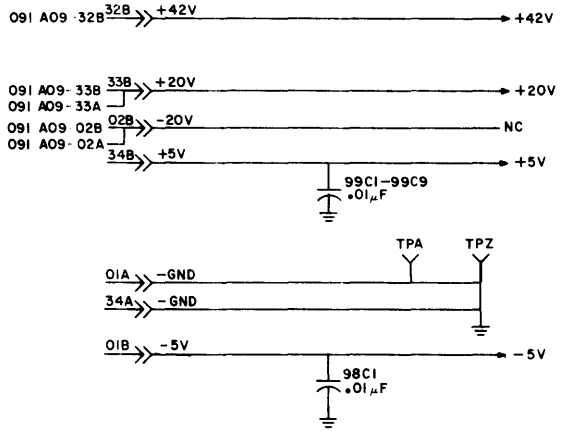

DRAWN	W. Bugston	7-9-77	CONTROL DATA	INTERLOCKS AND SPEED DETECTOR DIAGRAMS	CODE IDENT 19333	C	83322680	B	A
CHECKED									
ENGINEER			NORMANDALE DIVISION	TYPE: ASGV LOC: A2A10	CROSS REF NO 101		SHEET 1 OF 4	PAGE 1-55	
APPROVED									

REF 83215710

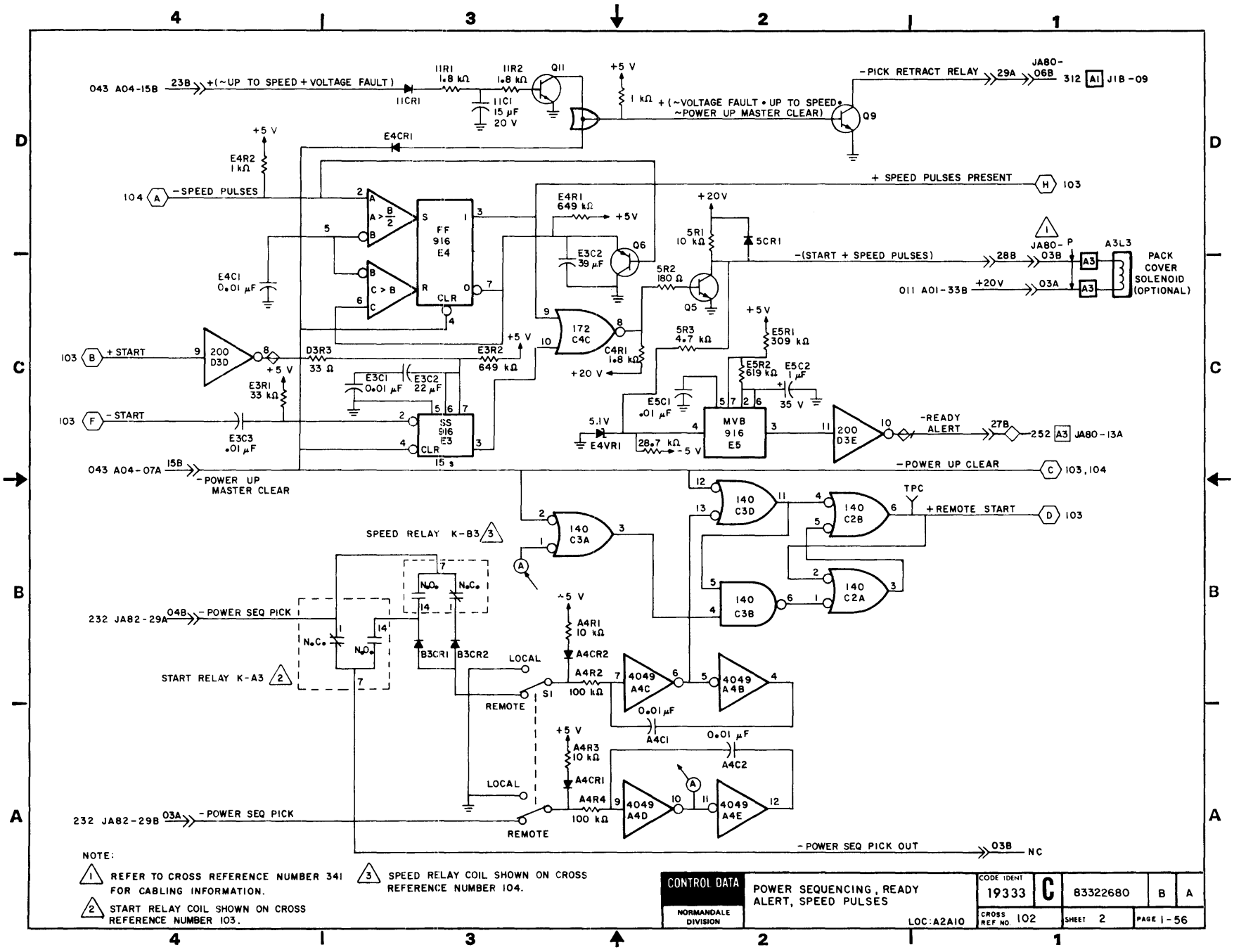
043 A04-15B
23B
+(~UP TO SPEED + VOLTAGE FAULT)
11CR1
11R1 1.8 kΩ
11R2 1.8 kΩ
11C1 15 µF 20 V
Q11
+5 V
1 kΩ
+(~VOLTAGE FAULT • UP TO SPEED • ~POWER UP MASTER CLEAR)
Q9
-PICK RETRACT RELAY
29A
JA80-06B
312 A1 J1B-09
E4CR1
E4R2 1 kΩ
104 A -SPEED PULSES
+ SPEED PULSES PRESENT
H 103
E4R1 649 kΩ
+5V
+20V
5R1 10 kΩ
5CR1
E3C2 39 µF
Q6
5R2 180 Ω
Q5
-(START + SPEED PULSES)
28B
JA80-03B
A3L3
PACK COVER SOLENOID (OPTIONAL)
011 A01-33B
+20V
03A
E4C1 0.01 µF
FF 916 E4
A > B/2
B
C > B
C
R
S
CLR
172 C4C
C4R1 1.8 kΩ
5R3 4.7 kΩ
E5R1 309 kΩ
E5R2 619 kΩ
E5C2 1 µF
35 V
E5C1 .01 µF
103 B +START
200 D3D
D3R3 33 Ω
E3R2 649 kΩ
E3R1 33 kΩ
E3C1 0.01 µF
E3C2 22 µF
103 F -START
E3C3 .01 µF
SS 916 E3
15 s
5.1V
E4VR1
28.7 kΩ
-5 V
MVB 916 E5
200 D3E
-READY ALERT
27B
252 A3 JA80-13A
043 A04-07A
15B
-POWER UP MASTER CLEAR
-POWER UP CLEAR
C 103,104
TPC
+REMOTE START
D 103
140 C3D
140 C2B
140 C3A
140 C2A
140 C3B
SPEED RELAY K-B3 3
232 JA82-29A
04B
-POWER SEQ PICK
START RELAY K-A3 2
B3CR1
B3CR2
LOCAL
REMOTE
S1
A4R1 10 kΩ
A4CR2
A4R2 100 kΩ
4049 A4C
4049 A4B
0.01 µF
A4C1
A4C2
A4R3 10 kΩ
A4CR1
A4R4 100 kΩ
4049 A4D
4049 A4E
232 JA82-29B
03A
-POWER SEQ PICK OUT
03B
NC
NOTE:
1 REFER TO CROSS REFERENCE NUMBER 341 FOR CABLING INFORMATION.
2 START RELAY COIL SHOWN ON CROSS REFERENCE NUMBER 103.
3 SPEED RELAY COIL SHOWN ON CROSS REFERENCE NUMBER 104.
CONTROL DATA
NORMANDALE DIVISION
POWER SEQUENCING, READY ALERT, SPEED PULSES
LOC:A2A10
CODE IDENT 19333
C
83322680
B
A
CROSS REF NO. 102
SHEET 2
PAGE 1-56

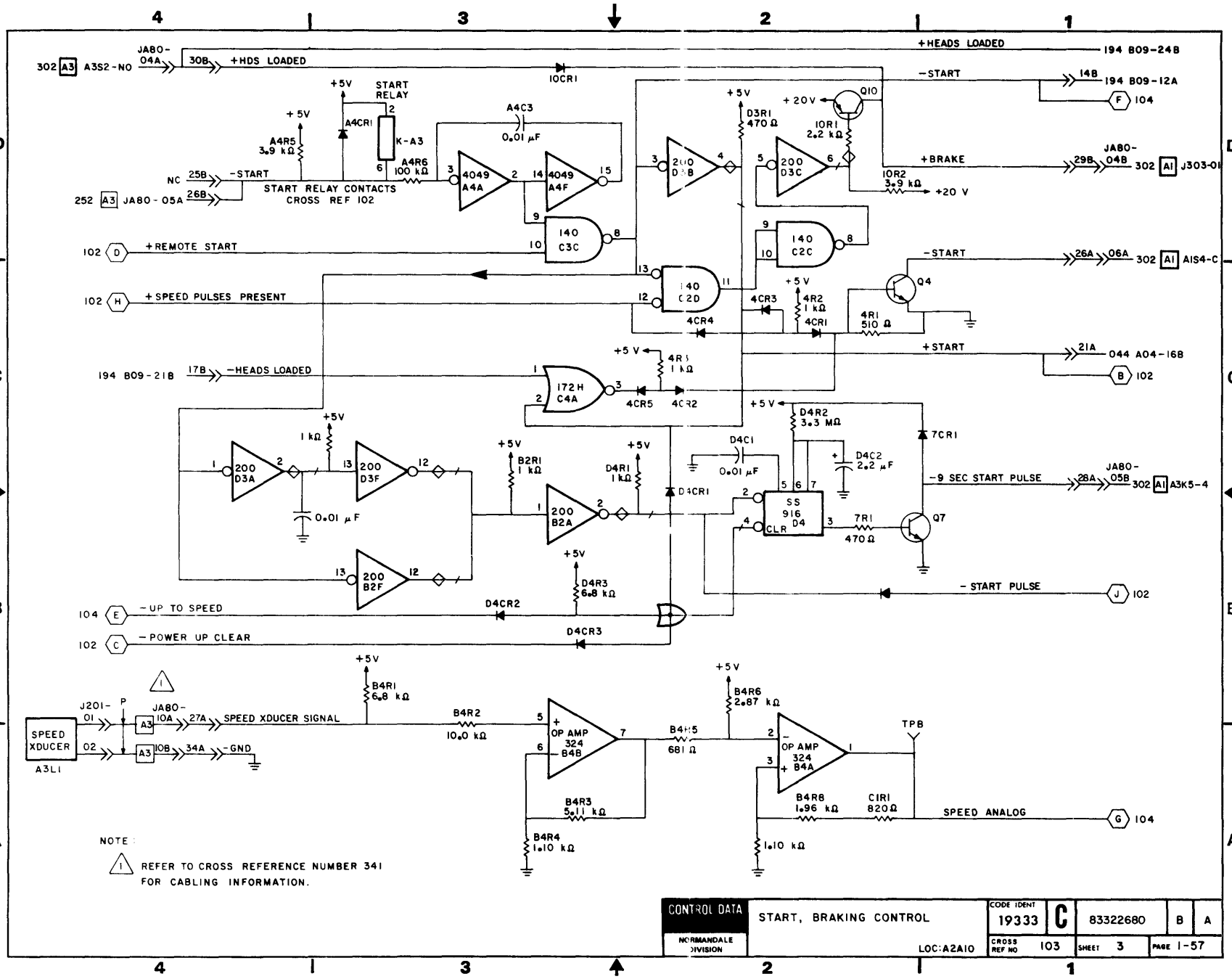
+HEADS LOADED
194 B09-24B
302 A3 A3S2-NO
JA80-04A
30B +HDS LOADED
10CR1
-START
14B
194 B09-12A
F 104
START RELAY
A4CR1
K-A3
A4R5 3.9 kΩ
A4R6 100 kΩ
A4C3 0.01 μF
NC 25B -START
252 A3 JA80-05A 26B
START RELAY CONTACTS CROSS REF 102
4049 A4A
4049 A4F
140 C3C
D3R1 470 Ω
Q10
+20V
10R1 2.2 kΩ
200 D3B
200 D3C
+BRAKE
29B JA80-04B 302 A1 J303-01
10R2 3.9 kΩ
+20 V
102 D +REMOTE START
102 H +SPEED PULSES PRESENT
140 C2C
140 C2D
-START
26A 06A 302 A1 A1S4-C
Q4
4CR3
4CR4
4R2 1 kΩ
4CR1
4R1 510 Ω
+START
21A 044 A04-16B
B 102
194 B09-21B 17B -HEADS LOADED
172H C4A
4R5 1 kΩ
4CR5
4CR2
D4R2 3.3 MΩ
7CR1
200 D3A
200 D3F
1 kΩ
0.01 μF
B2R1 1 kΩ
D4R1 1 kΩ
D4CR1
D4C1 0.01 μF
D4C2 2.2 μF
-9 SEC START PULSE
JA80-05B 302 A1 A3K5-4
200 B2A
SS 916 D4 CLR
7R1 470 Ω
Q7
D4R3 6.8 kΩ
- START PULSE
J 102
104 E -UP TO SPEED
D4CR2
102 C -POWER UP CLEAR
D4CR3
1
J201-01
J201-02
P
JA80-10A
JA80-10B
A3
27A SPEED XDUCER SIGNAL
34A -GND
SPEED XDUCER
A3L1
B4R1 6.8 kΩ
B4R2 10.0 kΩ
OP AMP 324 B4B
B4R3 5.11 kΩ
B4R4 1.10 kΩ
B4R5 681 Ω
B4R6 2.87 kΩ
OP AMP 324 B4A
B4R8 1.96 kΩ
C1R1 820 Ω
1.10 kΩ
TPB
SPEED ANALOG
G 104
NOTE:
1 REFER TO CROSS REFERENCE NUMBER 341 FOR CABLING INFORMATION.
CONTROL DATA
NORMANDALE DIVISION
START, BRAKING CONTROL
LOC:A2A10
CODE IDENT 19333
C
83322680
B
A
CROSS REF NO 103
SHEET 3
PAGE 1-57

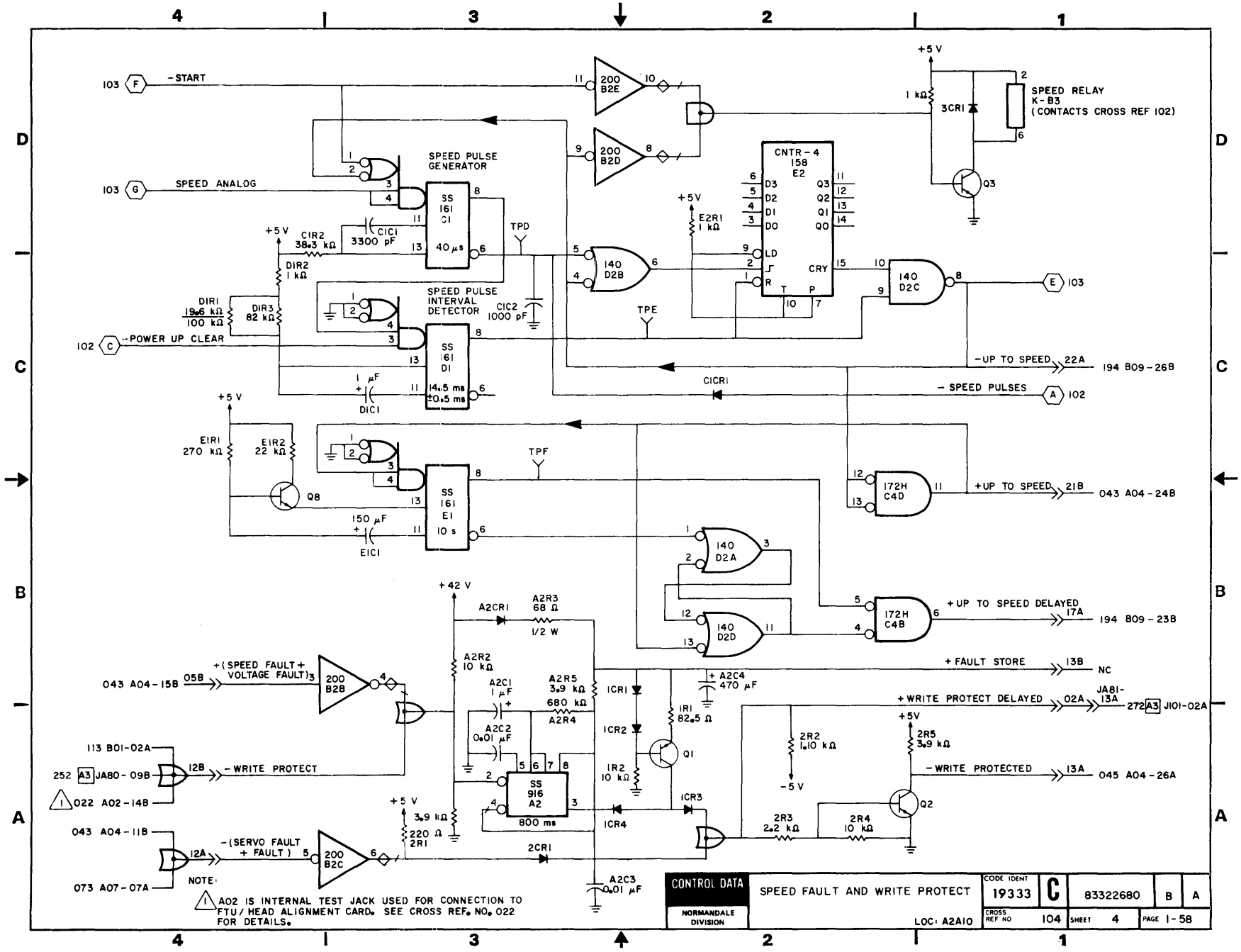
103 F -START
200 B2E
200 B2D
+5V
1 kΩ
3CR1
SPEED RELAY K-B3 (CONTACTS CROSS REF 102)
Q3
SPEED PULSE GENERATOR
103 G SPEED ANALOG
SS 161 C1
CIC1 3300 pF
CIR2 38.3 kΩ
40 μs
TPD
CNTR-4 158 E2
D3 D2 D1 D0
Q3 Q2 Q1 Q0
LD CRY
E2R1 1 kΩ
140 D2B
140 D2C
E 103
DIR2 1 kΩ
DIR1 19.6 kΩ / 100 kΩ
DIR3 82 kΩ
SPEED PULSE INTERVAL DETECTOR
CIC2 1000 pF
TPE
102 C -POWER UP CLEAR
SS 161 D1
1 μF DIC1
14.5 ms ±0.5 ms
-UP TO SPEED 22A
194 B09-26B
CICR1
- SPEED PULSES A 102
EIR1 270 kΩ
EIR2 22 kΩ
Q8
SS 161 E1
150 μF EIC1
10 s
TPF
172H C4D
+UP TO SPEED 21B
043 A04-24B
140 D2A
140 D2D
172H C4B
+UP TO SPEED DELAYED 17A
194 B09-23B
+42 V
A2CR1
A2R3 68 Ω 1/2 W
A2R2 10 kΩ
A2C1 1 μF
A2R5 3.9 kΩ
680 kΩ A2R4
A2C2 0.01 μF
+ A2C4 470 μF
+ FAULT STORE 13B NC
+WRITE PROTECT DELAYED 02A JA81-13A 272 A3 J101-02A
043 A04-15B 05B +(SPEED FAULT + VOLTAGE FAULT)3
200 B2B
1CR1
1CR2
1CR3
1CR4
1R1 82.5 Ω
1R2 10 kΩ
Q1
SS 916 A2
800 ms
2R2 1.10 kΩ
-5 V
2R5 3.9 kΩ
-WRITE PROTECTED 13A 045 A04-26A
Q2
2R3 2.2 kΩ
2R4 10 kΩ
113 B01-02A
252 A3 JA80-09B
12B -WRITE PROTECT
1 022 A02-14B
+5 V
3.9 kΩ
220 Ω 2R1
2CR1
043 A04-11B
073 A07-07A
12A -(SERVO FAULT + FAULT)
200 B2C
A2C3 0.01 μF
NOTE:
1 A02 IS INTERNAL TEST JACK USED FOR CONNECTION TO FTU/HEAD ALIGNMENT CARD. SEE CROSS REF. NO. 022 FOR DETAILS.
CONTROL DATA
NORMANDALE DIVISION
SPEED FAULT AND WRITE PROTECT
LOC: A2A10
CODE IDENT 19333
C
83322680
B
A
CROSS REF NO 104
SHEET 4
PAGE 1-58

REVISION STATUS OF SHEETS

1	2	3	4	5	6	7	8	9	10	11	12	13	14	15	16	17	18	19	20
A	A	A																	

REVISIONS

REV.	ECO	DESCRIPTION	DRFT	DATE	CHK'D
A	PE23000	RELEASED			

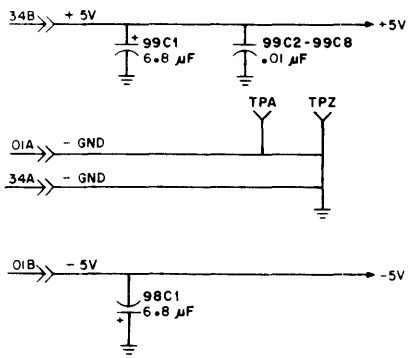

DRAWN	Stephen Barton	3/8/77	CONTROL DATA	TRANSMITTERS AND RECEIVERS - HEAD ADDRESS REGISTER DIAGRAMS	CODE IDENT 19333	C	83322680 A A
CHECKED							
ENGINEER			NORMANDALE DIVISION	TYPE HTVV LOC A2B01	CROSS REF NO 111		SHEET 1 OF 3 PAGE 1-59
APPROVED							

REF 83215711

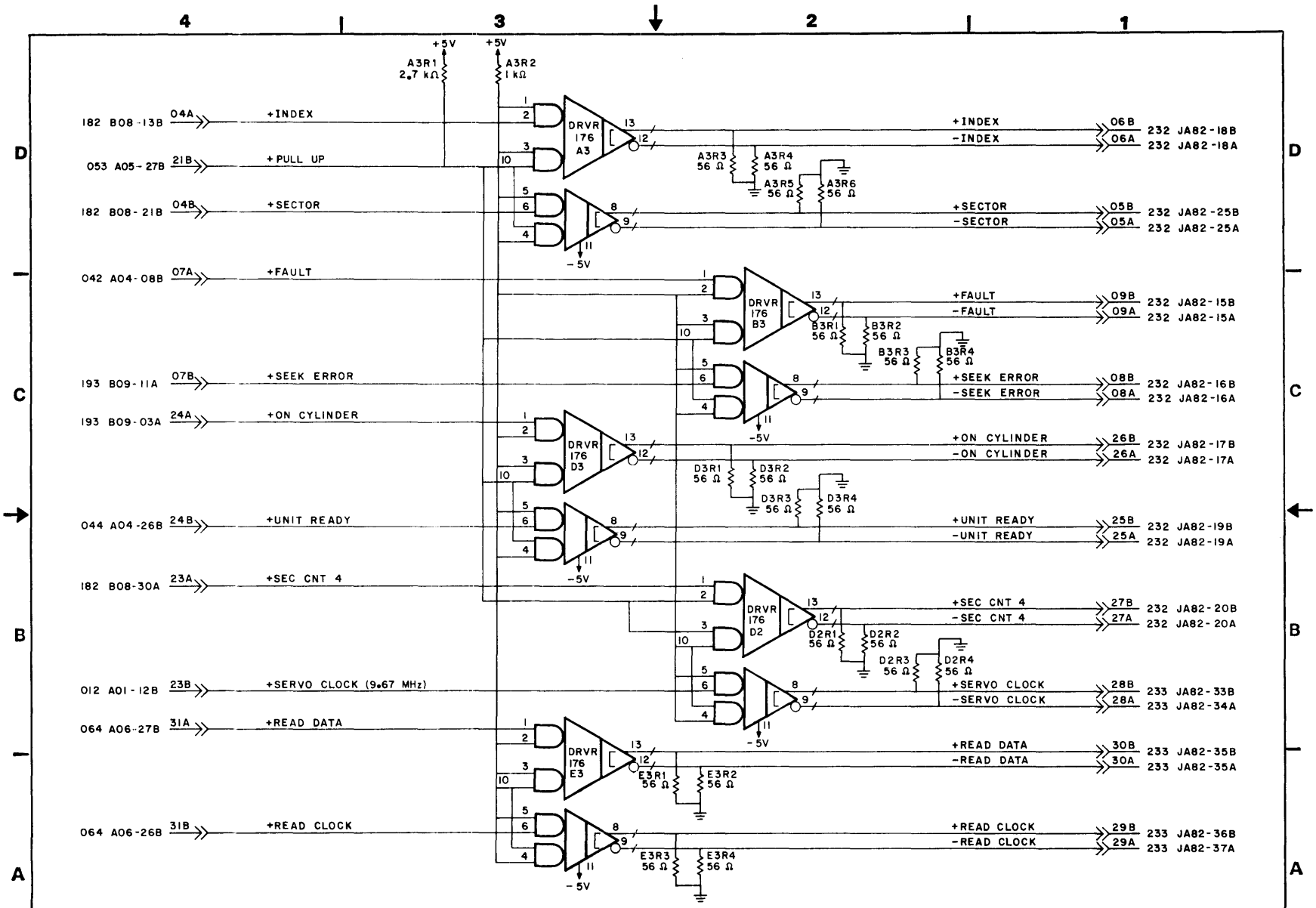
+5V
A3R1 2.7 kΩ
+5V
A3R2 1 kΩ
182 B08-13B
04A
+INDEX
053 A05-27B
21B
+PULL UP
182 B08-21B
04B
+SECTOR
042 A04-08B
07A
+FAULT
193 B09-11A
07B
+SEEK ERROR
193 B09-03A
24A
+ON CYLINDER
044 A04-26B
24B
+UNIT READY
182 B08-30A
23A
+SEC CNT 4
012 A01-12B
23B
+SERVO CLOCK (9.67 MHz)
064 A06-27B
31A
+READ DATA
064 A06-26B
31B
+READ CLOCK
DRVR 176 A3
DRVR 176 B3
DRVR 176 D3
DRVR 176 D2
DRVR 176 E3
-5V
A3R3 56 Ω
A3R4 56 Ω
A3R5 56 Ω
A3R6 56 Ω
B3R1 56 Ω
B3R2 56 Ω
B3R3 56 Ω
B3R4 56 Ω
D3R1 56 Ω
D3R2 56 Ω
D3R3 56 Ω
D3R4 56 Ω
D2R1 56 Ω
D2R2 56 Ω
D2R3 56 Ω
D2R4 56 Ω
E3R1 56 Ω
E3R2 56 Ω
E3R3 56 Ω
E3R4 56 Ω
+INDEX
-INDEX
06B
06A
232 JA82-18B
232 JA82-18A
+SECTOR
-SECTOR
05B
05A
232 JA82-25B
232 JA82-25A
+FAULT
-FAULT
09B
09A
232 JA82-15B
232 JA82-15A
+SEEK ERROR
-SEEK ERROR
08B
08A
232 JA82-16B
232 JA82-16A
+ON CYLINDER
-ON CYLINDER
26B
26A
232 JA82-17B
232 JA82-17A
+UNIT READY
-UNIT READY
25B
25A
232 JA82-19B
232 JA82-19A
+SEC CNT 4
-SEC CNT 4
27B
27A
232 JA82-20B
232 JA82-20A
+SERVO CLOCK
-SERVO CLOCK
28B
28A
233 JA82-33B
233 JA82-34A
+READ DATA
-READ DATA
30B
30A
233 JA82-35B
233 JA82-35A
+READ CLOCK
-READ CLOCK
29B
29A
233 JA82-36B
233 JA82-37A
CONTROL DATA
NORMANDALE DIVISION
TRANSMITTERS
LOC: A2B01
CODE IDENT 19333
C
83322680
B
A
CROSS REF NO 112
SHEET 2
PAGE 1-60

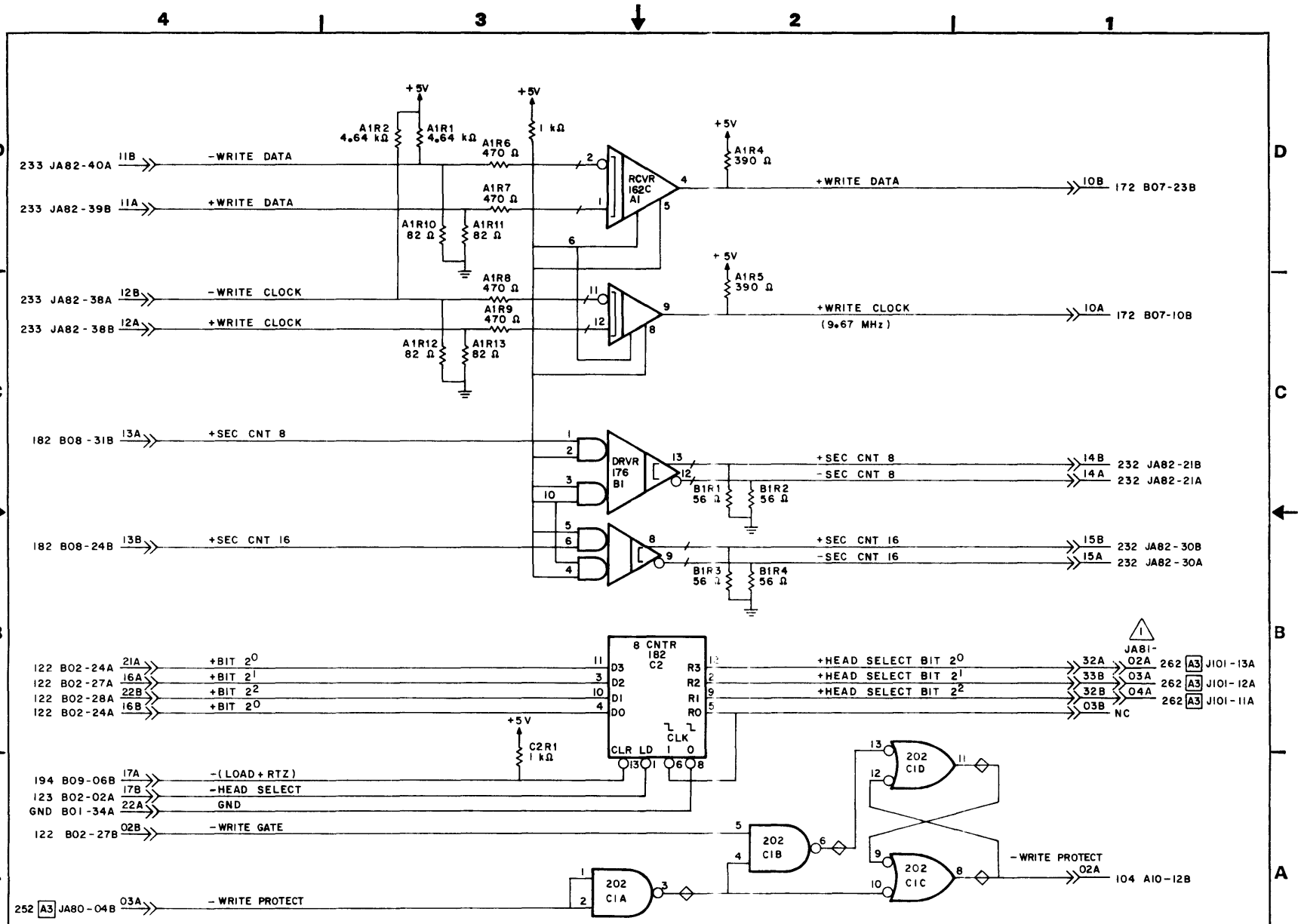
4
3
2
1
D
C
B
A
+5V
A1R2 4.64 kΩ
A1R1 4.64 kΩ
A1R6 470 Ω
1 kΩ
233 JA82-40A 11B -WRITE DATA
233 JA82-39B 11A +WRITE DATA
A1R7 470 Ω
A1R10 82 Ω
A1R11 82 Ω
RCVR 162C A1
A1R4 390 Ω
+WRITE DATA
10B 172 B07-23B
A1R8 470 Ω
233 JA82-38A 12B -WRITE CLOCK
233 JA82-38B 12A +WRITE CLOCK
A1R9 470 Ω
A1R12 82 Ω
A1R13 82 Ω
A1R5 390 Ω
+WRITE CLOCK
(9.67 MHz)
10A 172 B07-10B
182 B08-31B 13A +SEC CNT 8
DRVR 176 B1
B1R1 56 Ω
B1R2 56 Ω
+SEC CNT 8
-SEC CNT 8
14B 232 JA82-21B
14A 232 JA82-21A
182 B08-24B 13B +SEC CNT 16
B1R3 56 Ω
B1R4 56 Ω
+SEC CNT 16
-SEC CNT 16
15B 232 JA82-30B
15A 232 JA82-30A
8 CNTR 182 C2
122 B02-24A 21A +BIT 2^0
122 B02-27A 16A +BIT 2^1
122 B02-28A 22B +BIT 2^2
122 B02-24A 16B +BIT 2^0
D3 D2 D1 D0
R3 R2 R1 R0
CLK
CLR LD
+HEAD SELECT BIT 2^0
+HEAD SELECT BIT 2^1
+HEAD SELECT BIT 2^2
32A 33B 32B 03B NC
JA81-
02A 03A 04A
262 A3 J101-13A
262 A3 J101-12A
262 A3 J101-11A
C2R1 1 kΩ
194 B09-06B 17A -(LOAD+RTZ)
123 B02-02A 17B -HEAD SELECT
GND B01-34A 22A GND
122 B02-27B 02B -WRITE GATE
202 C1D
202 C1B
202 C1C
202 C1A
-WRITE PROTECT
02A 104 A10-12B
252 A3 JA80-04B 03A -WRITE PROTECT
NOTE:
1 REFER TO CROSS REFERENCE NUMBER 341 FOR CABLING INFORMATION
CONTROL DATA
NORMANDALE DIVISION
RECEIVERS AND HD REGISTER
LOC:A2B01
CODE IDENT 19333
C
83322680
B
A
CROSS REF NO 113
SHEET 3
PAGE 1-61/62

REVISION STATUS OF SHEETS

1	2	3	4	5	6	7	8	9	10	11	12	13	14	15	16	17	18	19	20
A	A	A	A																

REVISIONS

REV.	ECO.	DESCRIPTION	DRFT.	DATE	CHK'D
A	PE23000	RELEASED			

UNUSED LOGIC ELEMENTS

ELEMENT TYPE	LOCATION	OUTPUT PIN(S)
173H	B1B	6
230LS	A1A	12

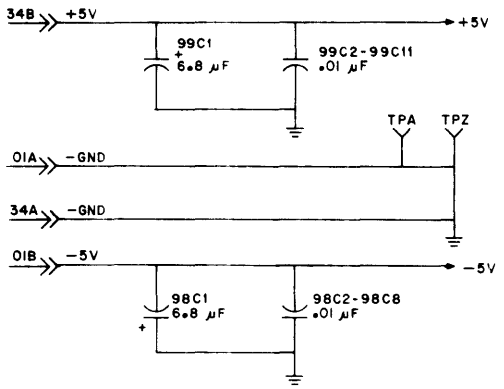

DRAWN	Stephen Smith	3/9/77	CONTROL DATA	RECEIVERS DIAGRAMS	CODE IDENT 19333	C	83322680	A A
CHECKED								
ENGINEER			NORMANDALE DIVISION	TYPE HRVV LOC A2B02	CROSS REF NO 121		SHEET 1 OF 4	PAGE 1-63
APPROVED								

REF 83215712

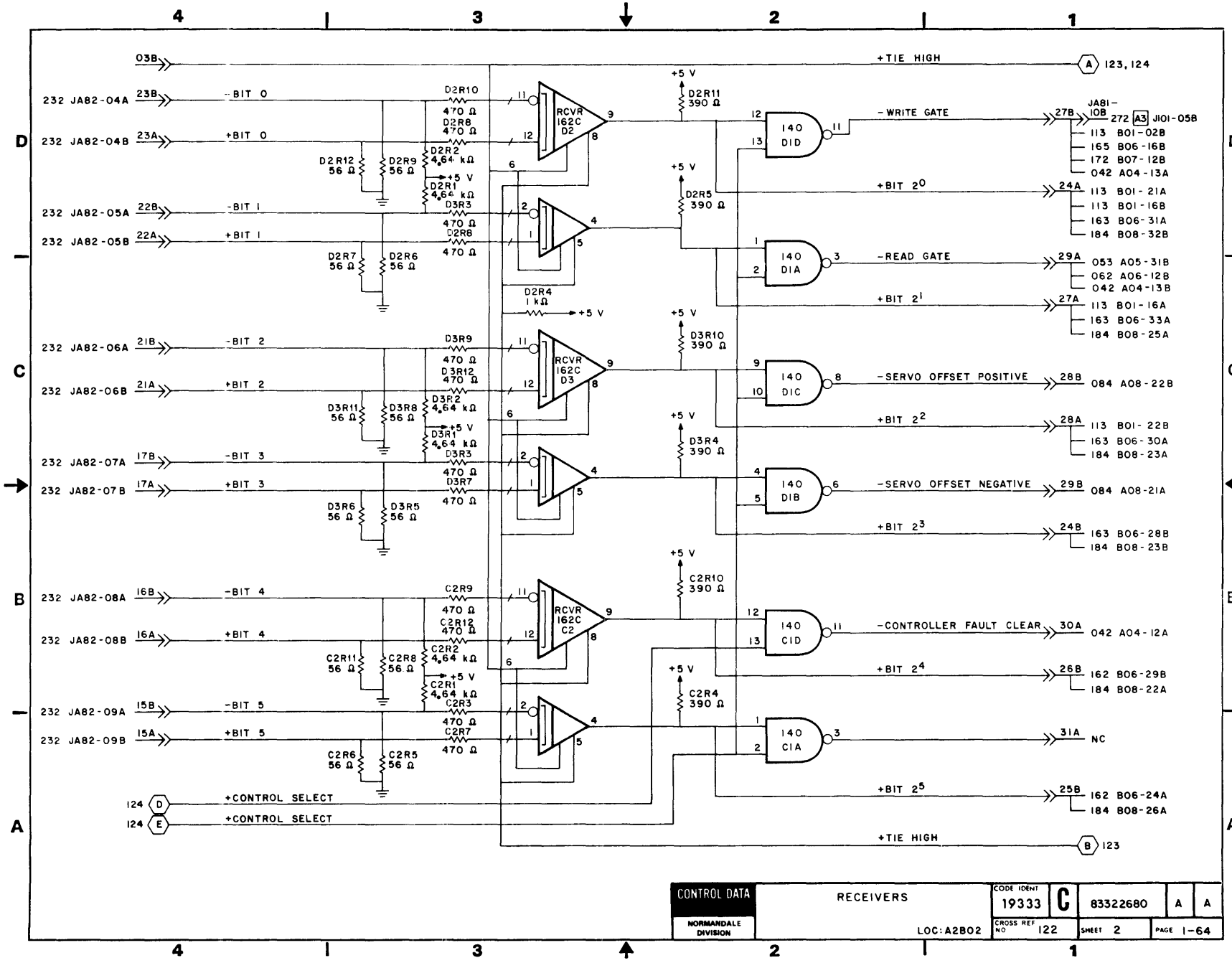
03B
+TIE HIGH
A 123, 124
232 JA82-04A 23B -BIT 0
232 JA82-04B 23A +BIT 0
232 JA82-05A 22B -BIT 1
232 JA82-05B 22A +BIT 1
232 JA82-06A 21B -BIT 2
232 JA82-06B 21A +BIT 2
232 JA82-07A 17B -BIT 3
232 JA82-07B 17A +BIT 3
232 JA82-08A 16B -BIT 4
232 JA82-08B 16A +BIT 4
232 JA82-09A 15B -BIT 5
232 JA82-09B 15A +BIT 5
D2R10 470 Ω
D2R8 470 Ω
D2R12 56 Ω
D2R9 56 Ω
D2R2 4.64 kΩ
D2R1 4.64 kΩ
+5 V
D3R3 470 Ω
D2R8 470 Ω
D2R7 56 Ω
D2R6 56 Ω
D2R4 1 kΩ
D3R9 470 Ω
D3R12 470 Ω
D3R11 56 Ω
D3R8 56 Ω
D3R2 4.64 kΩ
D3R1 4.64 kΩ
D3R3 470 Ω
D3R7 470 Ω
D3R6 56 Ω
D3R5 56 Ω
C2R9 470 Ω
C2R12 470 Ω
C2R11 56 Ω
C2R8 56 Ω
C2R2 4.64 kΩ
C2R1 4.64 kΩ
C2R3 470 Ω
C2R7 470 Ω
C2R6 56 Ω
C2R5 56 Ω
RCVR 162C D2
RCVR 162C D3
RCVR 162C C2
D2R11 390 Ω
D2R5 390 Ω
D3R10 390 Ω
D3R4 390 Ω
C2R10 390 Ω
C2R4 390 Ω
140 DID
140 DIA
140 DIC
140 DIB
140 CID
140 CIA
-WRITE GATE
+BIT 2^0
-READ GATE
+BIT 2^1
-SERVO OFFSET POSITIVE
+BIT 2^2
-SERVO OFFSET NEGATIVE
+BIT 2^3
-CONTROLLER FAULT CLEAR
+BIT 2^4
+BIT 2^5
27B JA81-10B 272 A3 J101-05B
113 B01-02B
165 B06-16B
172 B07-12B
042 A04-13A
24A 113 B01-21A
113 B01-16B
163 B06-31A
184 B08-32B
29A 053 A05-31B
062 A06-12B
042 A04-13B
27A 113 B01-16A
163 B06-33A
184 B08-25A
28B 084 A08-22B
28A 113 B01-22B
163 B06-30A
184 B08-23A
29B 084 A08-21A
24B 163 B06-28B
184 B08-23B
30A 042 A04-12A
26B 162 B06-29B
184 B08-22A
31A NC
25B 162 B06-24A
184 B08-26A
124 D +CONTROL SELECT
124 E +CONTROL SELECT
+TIE HIGH
B 123
CONTROL DATA
NORMANDALE DIVISION
RECEIVERS
LOC:A2B02
CODE IDENT 19333
C
83322680
A
A
CROSS REF NO 122
SHEET 2
PAGE 1-64

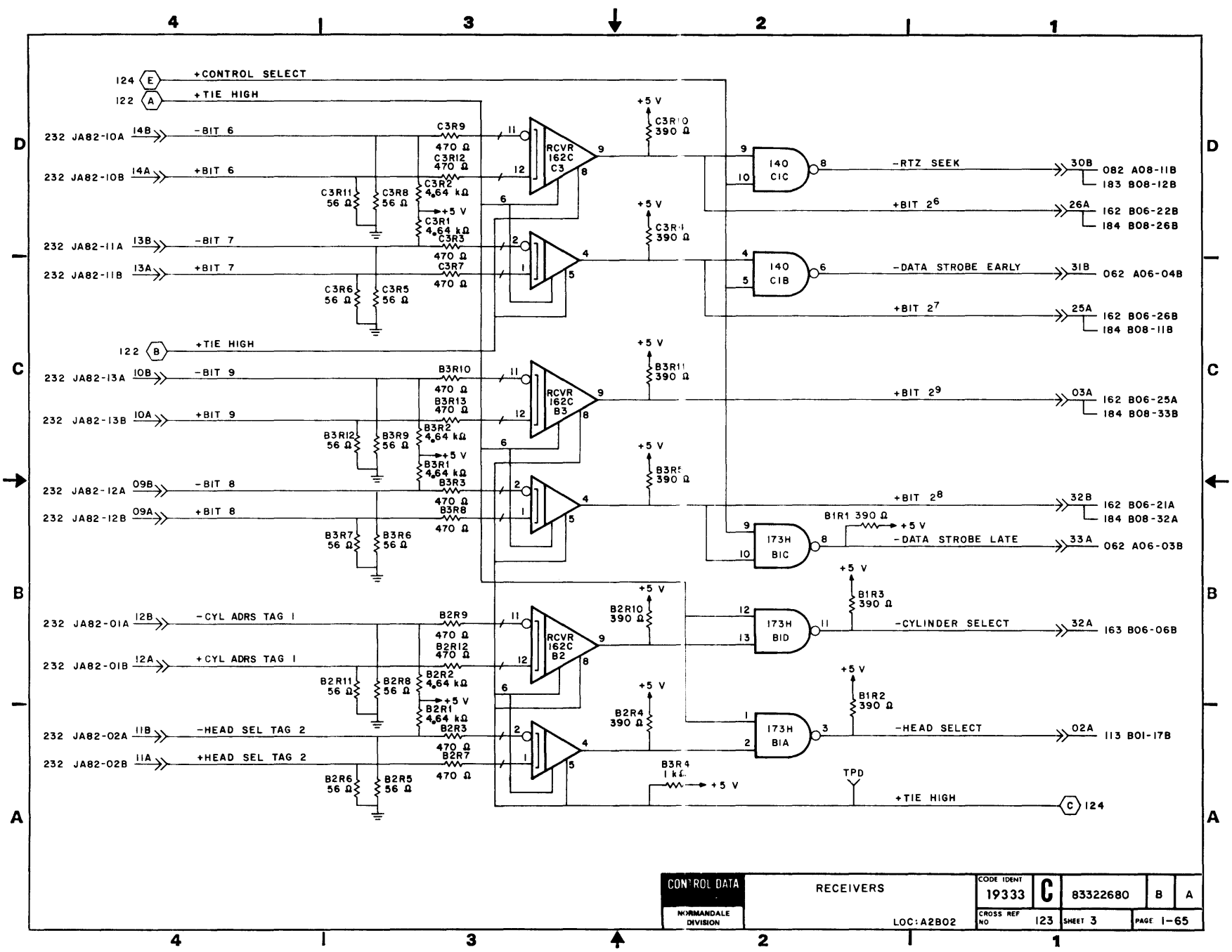

CONTROL DATA NORMANDALE DIVISION	RECEIVERS LOC:A2B02	CODE IDENT 19333	C	83322680	B	A
		CROSS REF NO 123	SHEET 3	PAGE 1-65		

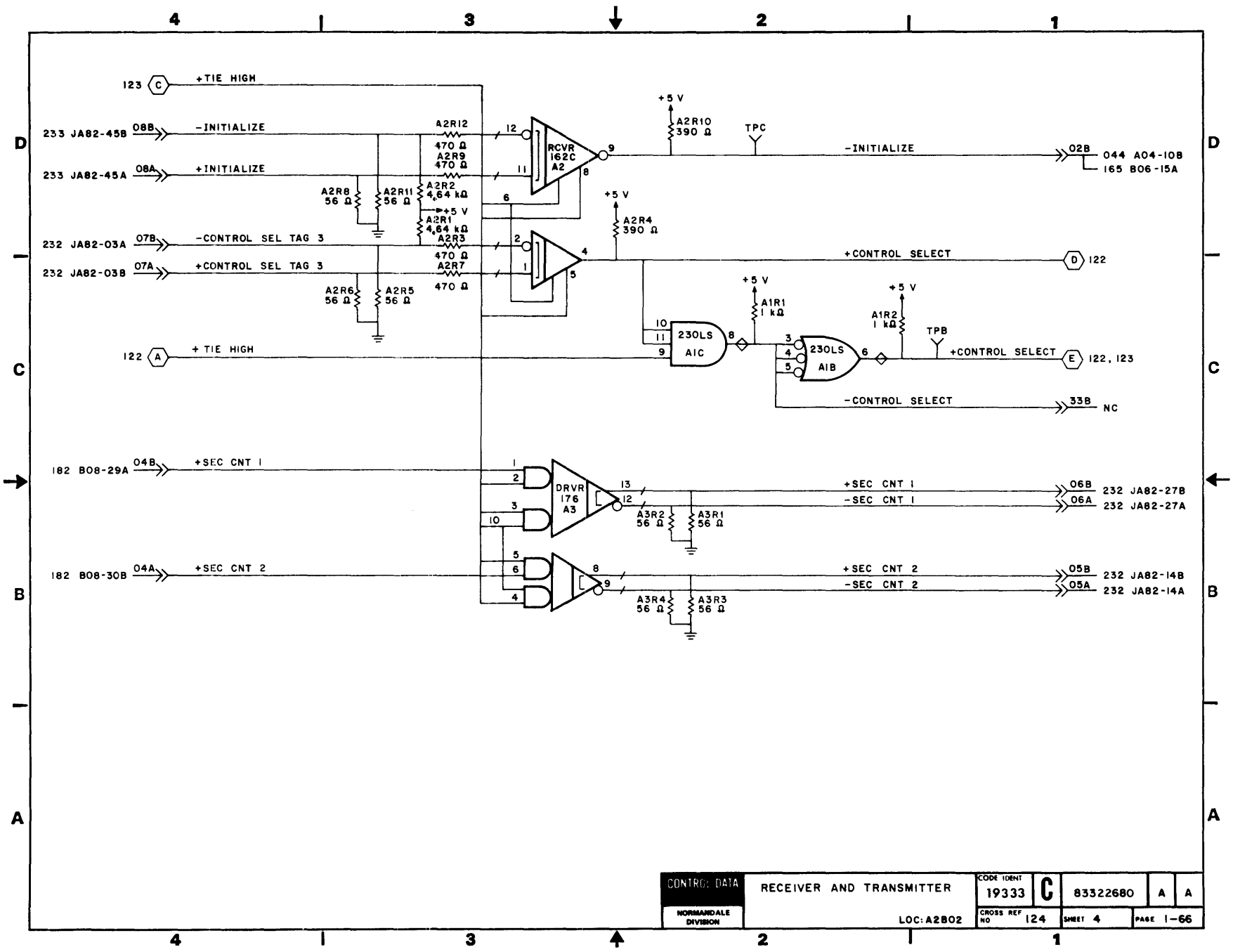

CONTROL DATA NORMANDALE DIVISION	RECEIVER AND TRANSMITTER LOC: A2B02	CODE IDENT 19333	C	83322680	A	A
		CROSS REF NO 124		SHEET 4	PAGE 1-66	

REVISION STATUS OF SHEETS

1	2	3	4	5	6	7	8	9	10	11	12	13	14	15	16	17	18	19	20
A	A	A	A	A															

REVISIONS

REV.	ECO.	DESCRIPTION	DRFT.	DATE	CHK'D
A	PE23000	RELEASED			

UNUSED LOGIC ELEMENTS

ELEMENT TYPE	LOCATION	OUTPUT PIN(S)
200	A1	8,10,12
140	B4	6

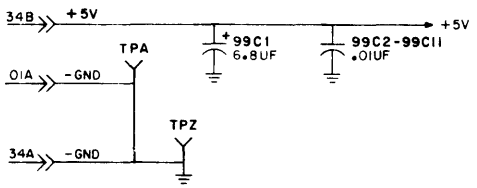

DRAWN	Stephen Bentley	3/7/77	CONTROL DATA NORMANDALE DIVISION	DIFFERENCE GENERATOR AND CONTROL DIAGRAMS TYPE: FLWV LOC: A2B06	CODE IDENT 19333	C	83322680 A A
CHECKED					CROSS REF NO 161	SHEET 1 OF 5	PAGE 1-67
ENGINEER							
APPROVED							

REF 83215713

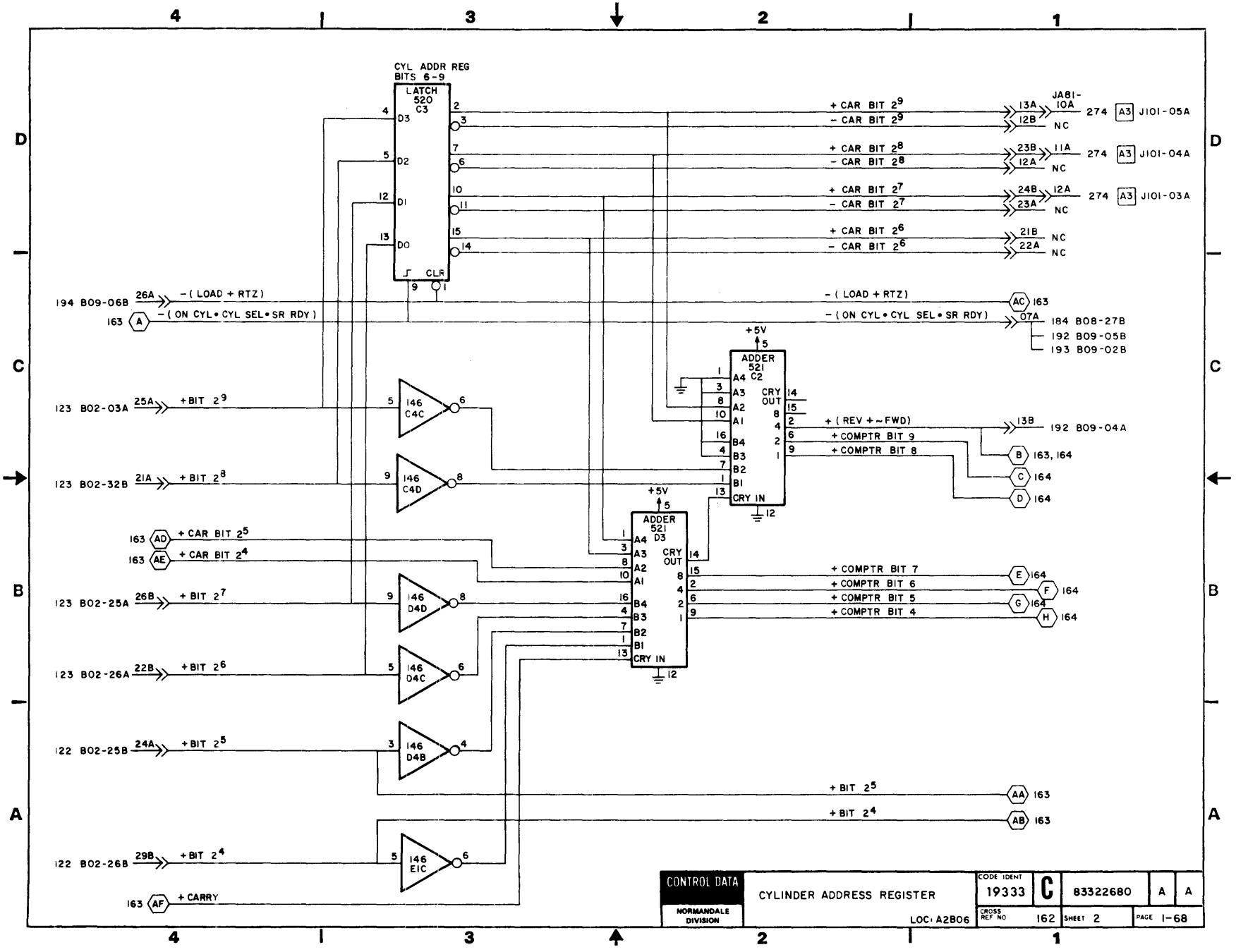
CYL ADDR REG BITS 6-9
LATCH 520 C3
D3
D2
D1
D0
CLR
+ CAR BIT 2^9
- CAR BIT 2^9
+ CAR BIT 2^8
- CAR BIT 2^8
+ CAR BIT 2^7
- CAR BIT 2^7
+ CAR BIT 2^6
- CAR BIT 2^6
JA81-10A
274 A3 J101-05A
274 A3 J101-04A
274 A3 J101-03A
NC
194 B09-06B 26A - (LOAD + RTZ)
163 A - (ON CYL • CYL SEL • SR RDY)
- (LOAD + RTZ)
- (ON CYL • CYL SEL • SR RDY)
AC 163
07A
184 B08-27B
192 B09-05B
193 B09-02B
+5V
ADDER 521 C2
ADDER 521 D3
CRY OUT
CRY IN
123 B02-03A 25A + BIT 2^9
123 B02-32B 21A + BIT 2^8
123 B02-25A 26B + BIT 2^7
123 B02-26A 22B + BIT 2^6
122 B02-25B 24A + BIT 2^5
122 B02-26B 29B + BIT 2^4
146 C4C
146 C4D
146 D4D
146 D4C
146 D4B
146 E1C
+ (REV + ~ FWD)
+ COMPTR BIT 9
+ COMPTR BIT 8
+ COMPTR BIT 7
+ COMPTR BIT 6
+ COMPTR BIT 5
+ COMPTR BIT 4
13B 192 B09-04A
B 163, 164
C 164
D 164
E 164
F 164
G 164
H 164
163 AD + CAR BIT 2^5
163 AE + CAR BIT 2^4
+ BIT 2^5
+ BIT 2^4
AA 163
AB 163
163 AF + CARRY
CONTROL DATA
NORMANDALE DIVISION
CYLINDER ADDRESS REGISTER
LOC: A2B06
CODE IDENT 19333
C
83322680
A
A
CROSS REF NO 162
SHEET 2
PAGE 1-68

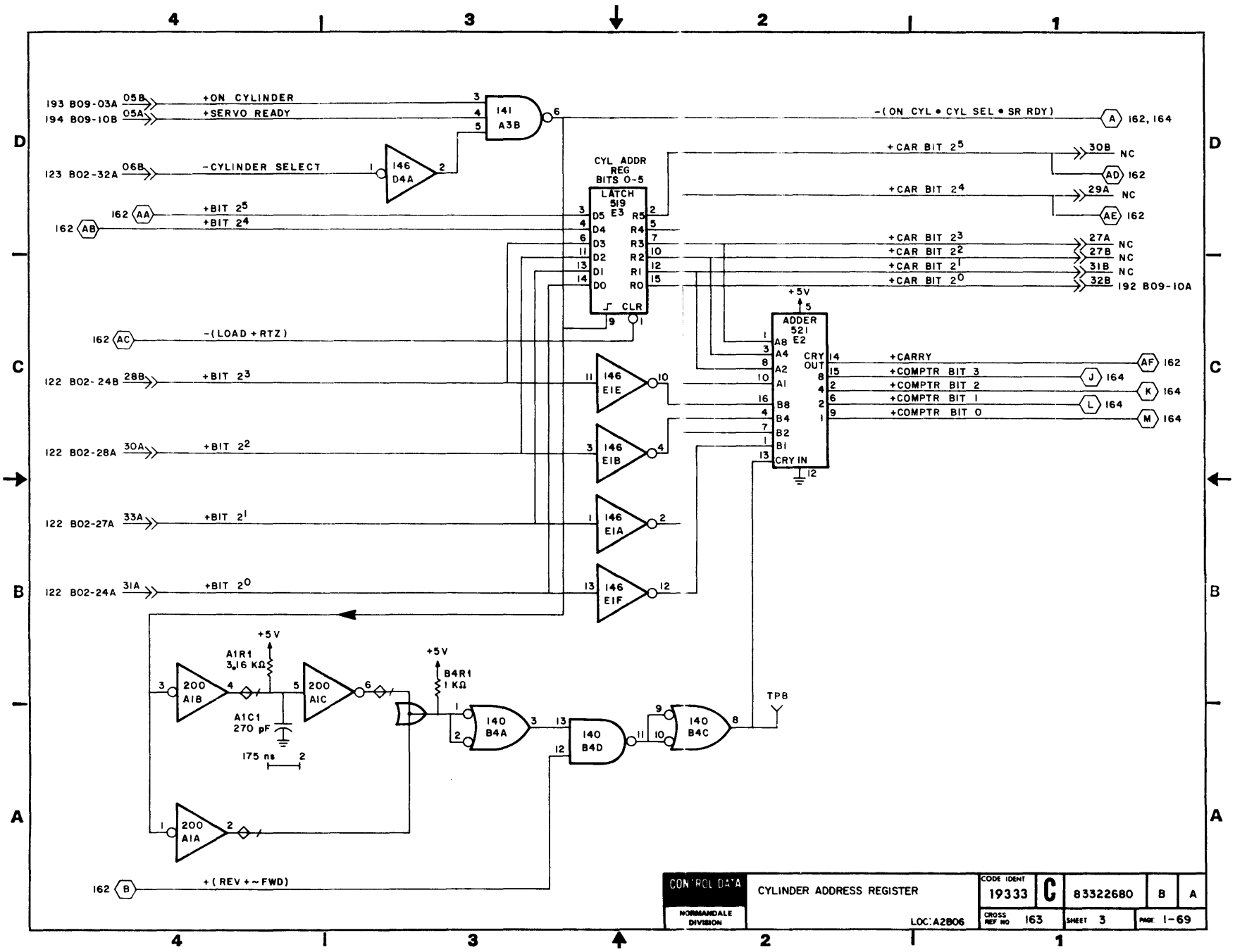

CONTROL DATA NORMANDALE DIVISION	CYLINDER ADDRESS REGISTER	CODE IDENT 19333	C	83322680	B	A
	LOC:A2B06	CROSS REF NO 163		SHEET 3	PAGE 1-69	

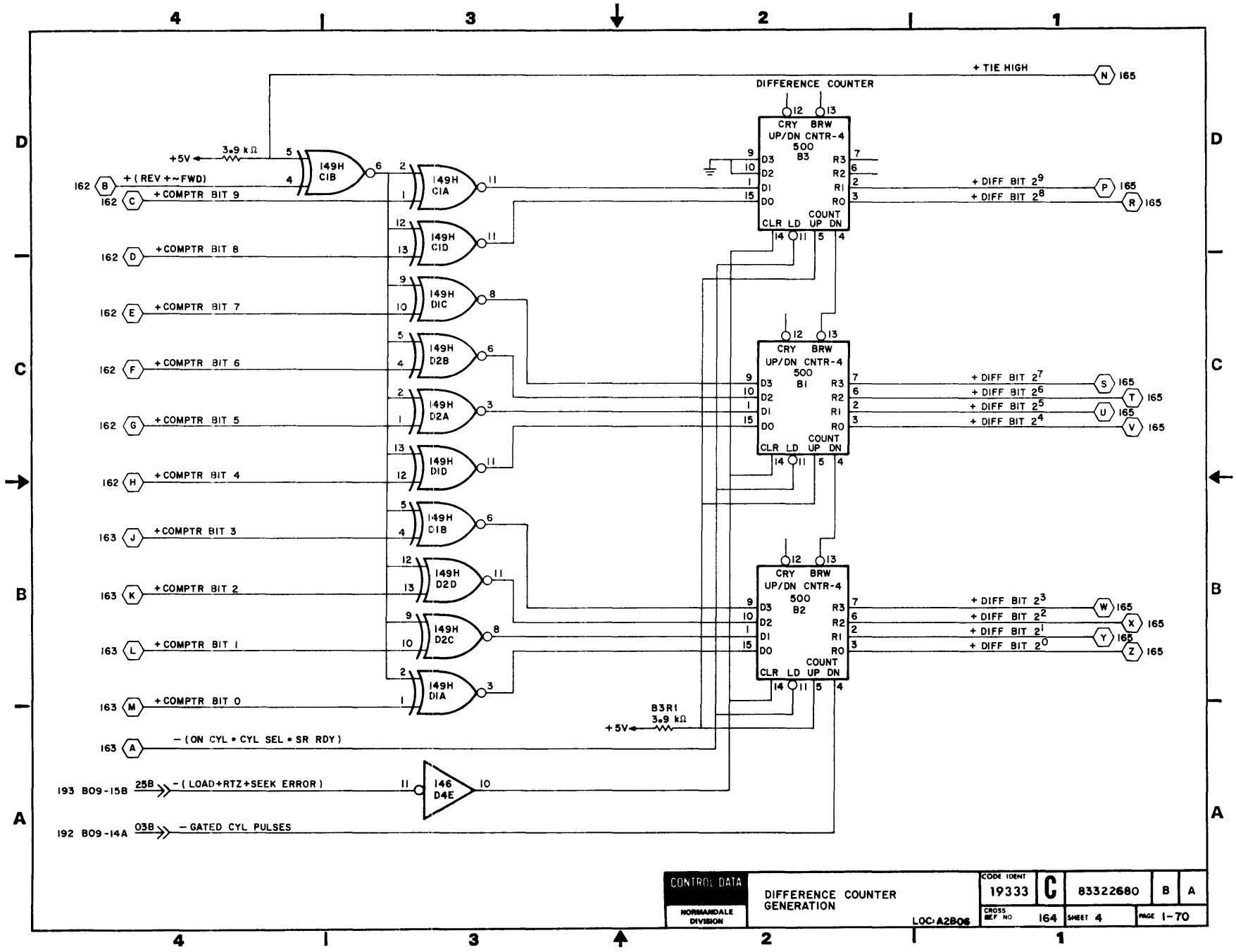

CONTROL DATA NORMANDALE DIVISION	DIFFERENCE COUNTER GENERATION LOC: A2B06	CODE IDENT 19333	C	83322680	B A
		CROSS REF NO 164		SHEET 4	PAGE 1-70

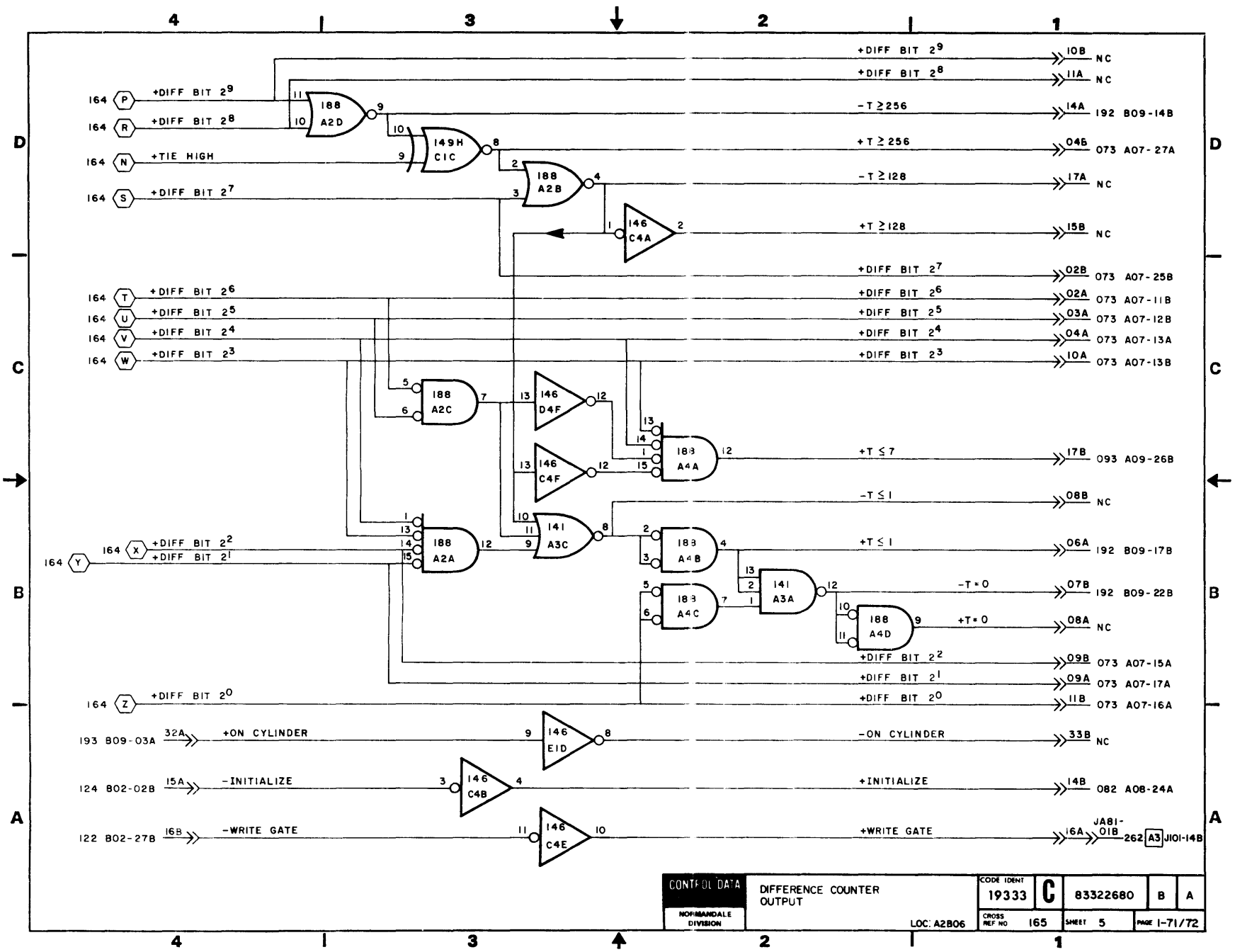
4
3
2
1
A
B
C
D
164 P +DIFF BIT 2^9
164 R +DIFF BIT 2^8
164 N +TIE HIGH
164 S +DIFF BIT 2^7
188 A2D
149H C1C
188 A2B
146 C4A
+DIFF BIT 2^9 10B NC
+DIFF BIT 2^8 11A NC
-T ≥ 256 14A 192 B09-14B
+T ≥ 256 04B 073 A07-27A
-T ≥ 128 17A NC
+T ≥ 128 15B NC
+DIFF BIT 2^7 02B 073 A07-25B
164 T +DIFF BIT 2^6
164 U +DIFF BIT 2^5
164 V +DIFF BIT 2^4
164 W +DIFF BIT 2^3
188 A2C
146 D4F
146 C4F
188 A4A
141 A3C
+DIFF BIT 2^6 02A 073 A07-11B
+DIFF BIT 2^5 03A 073 A07-12B
+DIFF BIT 2^4 04A 073 A07-13A
+DIFF BIT 2^3 10A 073 A07-13B
+T ≤ 7 17B 093 A09-26B
-T ≤ 1 08B NC
164 X +DIFF BIT 2^2
164 Y +DIFF BIT 2^1
188 A2A
188 A4B
188 A4C
141 A3A
188 A4D
+T ≤ 1 06A 192 B09-17B
-T = 0 07B 192 B09-22B
+T = 0 08A NC
+DIFF BIT 2^2 09B 073 A07-15A
+DIFF BIT 2^1 09A 073 A07-17A
164 Z +DIFF BIT 2^0
+DIFF BIT 2^0 11B 073 A07-16A
193 B09-03A 32A +ON CYLINDER
146 E1D
-ON CYLINDER 33B NC
124 B02-02B 15A -INITIALIZE
146 C4B
+INITIALIZE 14B 082 A08-24A
122 B02-27B 16B -WRITE GATE
146 C4E
+WRITE GATE 16A JA81-01B 262 A3 J101-14B
CONTROL DATA
NORMANDALE DIVISION
DIFFERENCE COUNTER OUTPUT
LOC: A2B06
CODE IDENT 19333
C
83322680
B
A
CROSS REF NO 165
SHEET 5
PAGE 1-71/72

REVISION STATUS OF SHEETS																			
1	2	3	4	5	6	7	8	9	10	11	12	13	14	15	16	17	18	19	20
A	A	A																	

REVISIONS					
REV.	ECO.	DESCRIPTION	DRFT.	DATE	CHK'D
A	PE23000	RELEASED			

NOTE:

1. DELAY LINES ARE CONNECTED TO JUMPER BLOCK AS SHOWN IN DIAGRAM AT THE RIGHT. ACTUAL DELAYS ARE SELECTED DURING MANUFACTURING. THIS DIAGRAM SHOWS TYPICAL CONNECTIONS. DELAY TIME FOR EACH DELAY LINE PIN RELATIVE TO PIN 6 INPUT IS SHOWN IN CHART TO THE RIGHT.

PIN	20NS DELAY
5	2 NS
4	4 NS
3	6 NS
2	8 NS
1	10 NS
13	12 NS
12	14 NS
11	16 NS
10	18 NS
9	20NS

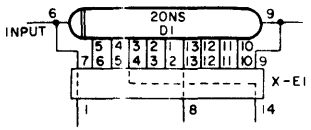

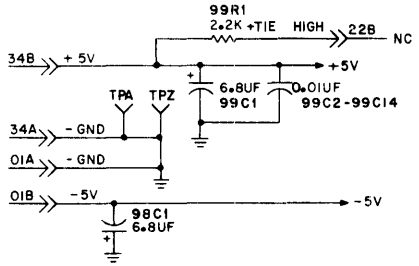

DRAWN	G. Rabine	3-3-77	CONTROL DATA	NRZ TO COMPENSATED MFM DIAGRAMS	CODE IDENT 19333	C	83322680	A	A
CHECKED									
ENGINEER			NORMANDALE DIVISION	TYPE ELXV LOC A2B07	CROSS REF NO 171	SHEET 1 OF 3	PAGE 1-73		
APPROVED									

REF 83215714

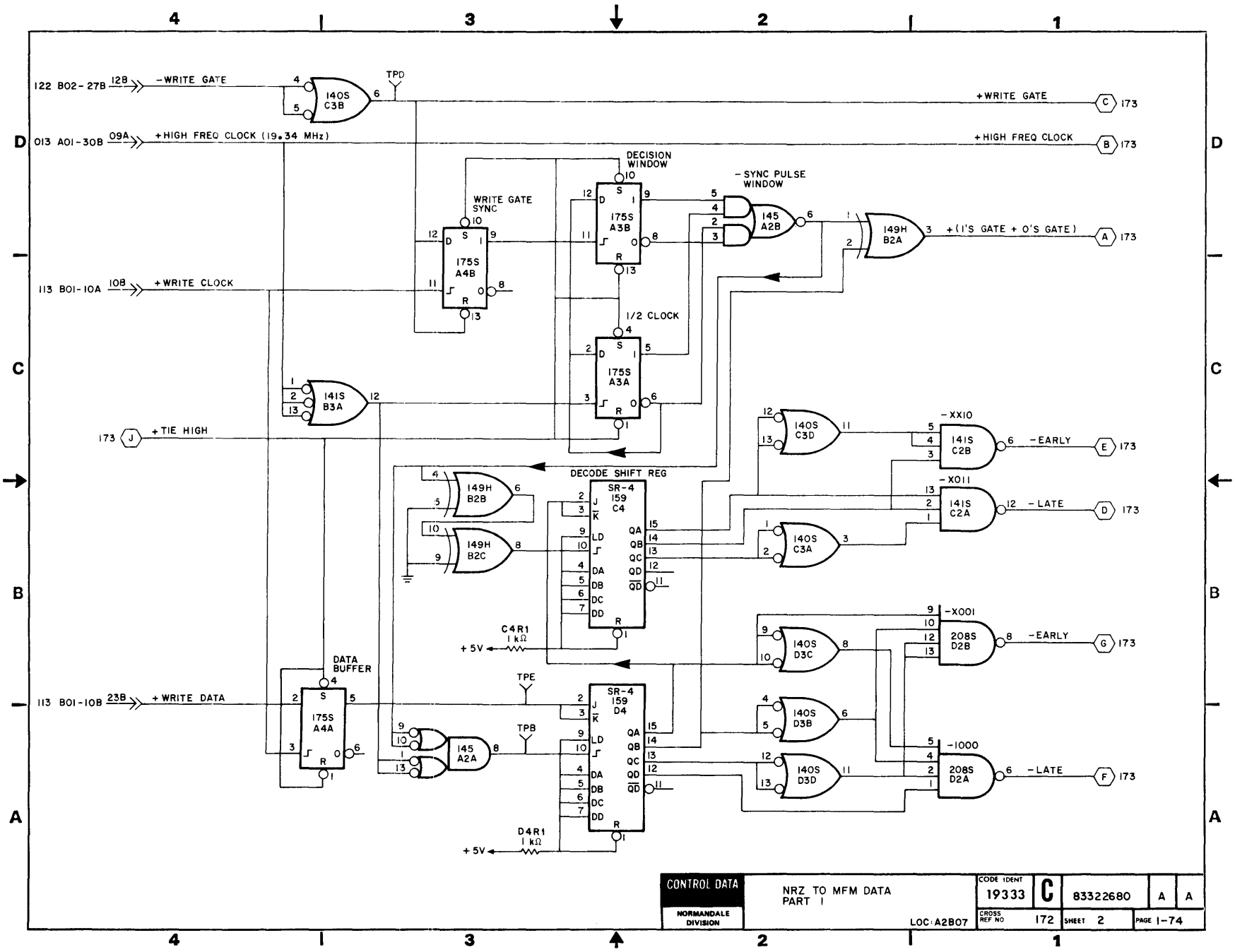
122 B02-27B 12B
-WRITE GATE
140S C3B
TPD
+WRITE GATE
C 173
013 A01-30B 09A
+HIGH FREQ CLOCK (19.34 MHz)
+HIGH FREQ CLOCK
B 173
DECISION WINDOW
-SYNC PULSE WINDOW
WRITE GATE SYNC
175S A3B
145 A2B
149H B2A
+(1'S GATE + 0'S GATE)
A 173
113 B01-10A 10B
+WRITE CLOCK
175S A4B
1/2 CLOCK
175S A3A
141S B3A
173 J
+TIE HIGH
DECODE SHIFT REG
149H B2B
149H B2C
SR-4 159 C4
140S C3D
-XX10
141S C2B
-EARLY
E 173
-XX11
141S C2A
-LATE
D 173
140S C3A
C4R1 1 kΩ
+5V
DATA BUFFER
113 B01-10B 23B
+WRITE DATA
175S A4A
TPE
TPB
145 A2A
SR-4 159 D4
140S D3C
-XX01
208S D2B
-EARLY
G 173
140S D3B
140S D3D
-1000
208S D2A
-LATE
F 173
D4R1 1 kΩ
+5V
CONTROL DATA
NORMANDALE DIVISION
NRZ TO MFM DATA
PART 1
LOC:A2B07
CODE IDENT 19333
C
83322680
A
A
CROSS REF NO 172
SHEET 2
PAGE 1-74

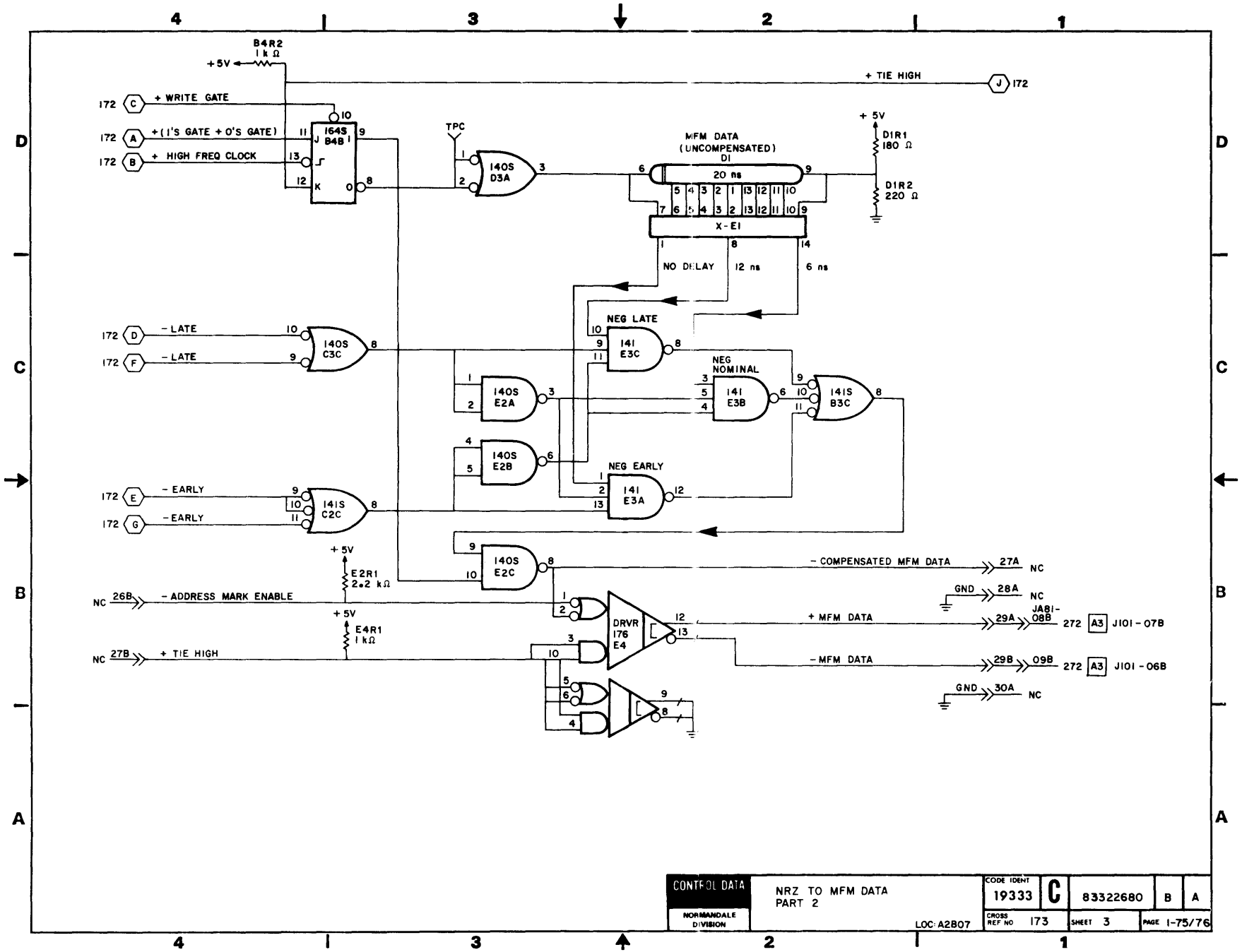
B4R2
1 kΩ
+5V
+ TIE HIGH
J 172
172 C + WRITE GATE
172 A + (1'S GATE + 0'S GATE)
172 B + HIGH FREQ CLOCK
164S B4B 1
TPC
140S D3A
MFM DATA (UNCOMPENSATED) D1
20 ns
+5V
D1R1 180 Ω
D1R2 220 Ω
X-E1
NO DELAY
12 ns
6 ns
NEG LATE
141 E3C
NEG NOMINAL
141 E3B
141S B3C
140S E2A
140S E2B
NEG EARLY
141 E3A
172 D - LATE
172 F - LATE
140S C3C
172 E - EARLY
172 G - EARLY
141S C2C
140S E2C
+5V
E2R1 2.2 kΩ
NC 26B - ADDRESS MARK ENABLE
+5V
E4R1 1 kΩ
NC 27B + TIE HIGH
DRVR 176 E4
- COMPENSATED MFM DATA 27A NC
GND 28A NC
+ MFM DATA 29A JA81-08B 272 A3 J101-07B
- MFM DATA 29B 09B 272 A3 J101-06B
GND 30A NC
CONTROL DATA
NORMANDALE DIVISION
NRZ TO MFM DATA
PART 2
LOC: A2807
CODE IDENT 19333
C
83322680
B
A
CROSS REF NO 173
SHEET 3
PAGE 1-75/76

REVISION STATUS OF SHEETS

1	2	3	4	5	6	7	8	9	10	11	12	13	14	15	16	17	18	19	20
A	A	A	A																

REVISIONS

REV.	ECO.	DESCRIPTION	DRFT.	DATE	CHK'D
A	PE23000	RELEASED			

UNUSED LOGIC ELEMENTS

TYPE	LOCATION	OUTPUT PIN(S)
146	C2C	6
140	D1C	8
140	E1	6,8

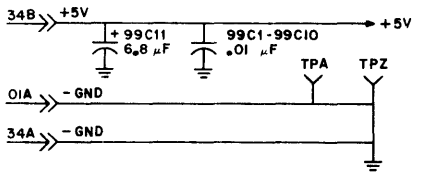

DRAWN	G. Rabine 9-3-77	CONTROL DATA NORMANDALE DIVISION	ACCESS CONTROL AND INDEX / SECTOR DECODE DIAGRAMS	CODE IDENT 19333	C	83322680	A	A
CHECKED								
ENGINEER								
APPROVED			TYPE: ELTV LOC: A2808	CROSS REF NO 181		SHEET 1 OF 4	PAGE 1-77	

REF 83215715

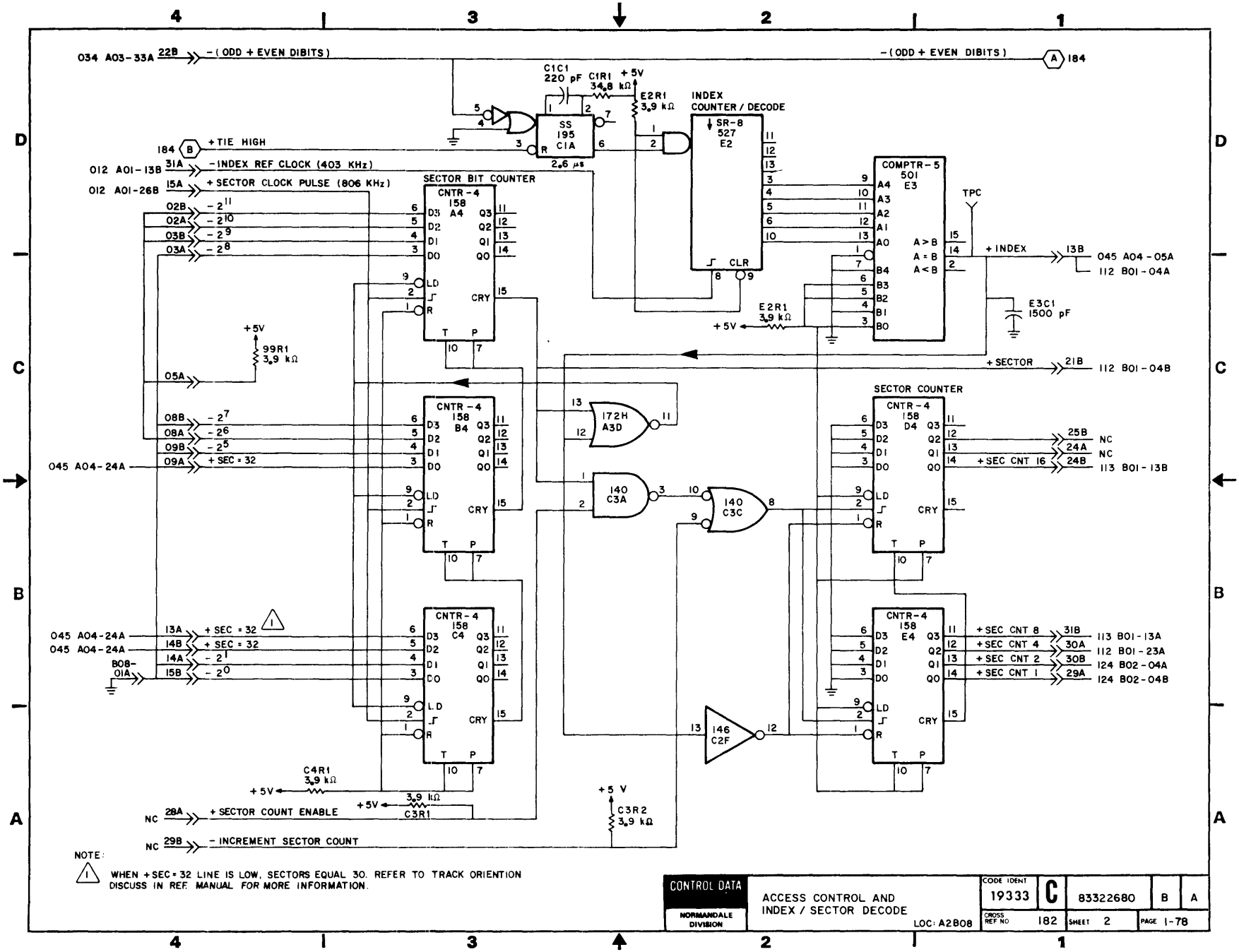
034 A03-33A 22B -(ODD + EVEN DIBITS)
-(ODD + EVEN DIBITS) A 184
C1C1 220 pF C1R1 +5V 34.8 kΩ
E2R1 3.9 kΩ
INDEX COUNTER / DECODE
SR-8 527 E2
SS 195 C1A
2.6 μs
184 B +TIE HIGH
012 A01-13B 31A -INDEX REF CLOCK (403 KHz)
012 A01-26B 15A +SECTOR CLOCK PULSE (806 KHz)
SECTOR BIT COUNTER
CNTR-4 158 A4
02B -2^11
02A -2^10
03B -2^9
03A -2^8
LD CRY R T P
+5V 99R1 3.9 kΩ
05A
COMPTR-5 501 E3
A4 A3 A2 A1 A0 B4 B3 B2 B1 B0
A>B A=B A<B
TPC
+INDEX 13B 045 A04-05A 112 B01-04A
E3C1 1500 pF
+5V E2R1 3.9 kΩ
+SECTOR 21B 112 B01-04B
SECTOR COUNTER
CNTR-4 158 D4
25B NC
24A NC
+SEC CNT 16 24B 113 B01-13B
08B -2^7
08A -2^6
09B -2^5
09A +SEC = 32
045 A04-24A
172H A3D
140 C3A
140 C3C
CNTR-4 158 B4
CNTR-4 158 C4
CNTR-4 158 E4
045 A04-24A 13A +SEC = 32 1
045 A04-24A 14B +SEC = 32
14A -2^1
B08-01A 15B -2^0
+SEC CNT 8 31B 113 B01-13A
+SEC CNT 4 30A 112 B01-23A
+SEC CNT 2 30B 124 B02-04A
+SEC CNT 1 29A 124 B02-04B
146 C2F
C4R1 3.9 kΩ
+5V
3.9 kΩ
C3R1
+5 V
C3R2 3.9 kΩ
NC 28A +SECTOR COUNT ENABLE
NC 29B -INCREMENT SECTOR COUNT
NOTE:
1 WHEN +SEC = 32 LINE IS LOW, SECTORS EQUAL 30. REFER TO TRACK ORIENTION DISCUSS IN REF. MANUAL FOR MORE INFORMATION.
CONTROL DATA
NORMANDALE DIVISION
ACCESS CONTROL AND INDEX / SECTOR DECODE
LOC: A2808
CODE IDENT 19333
C
83322680
B
A
CROSS REF NO 182
SHEET 2
PAGE 1-78

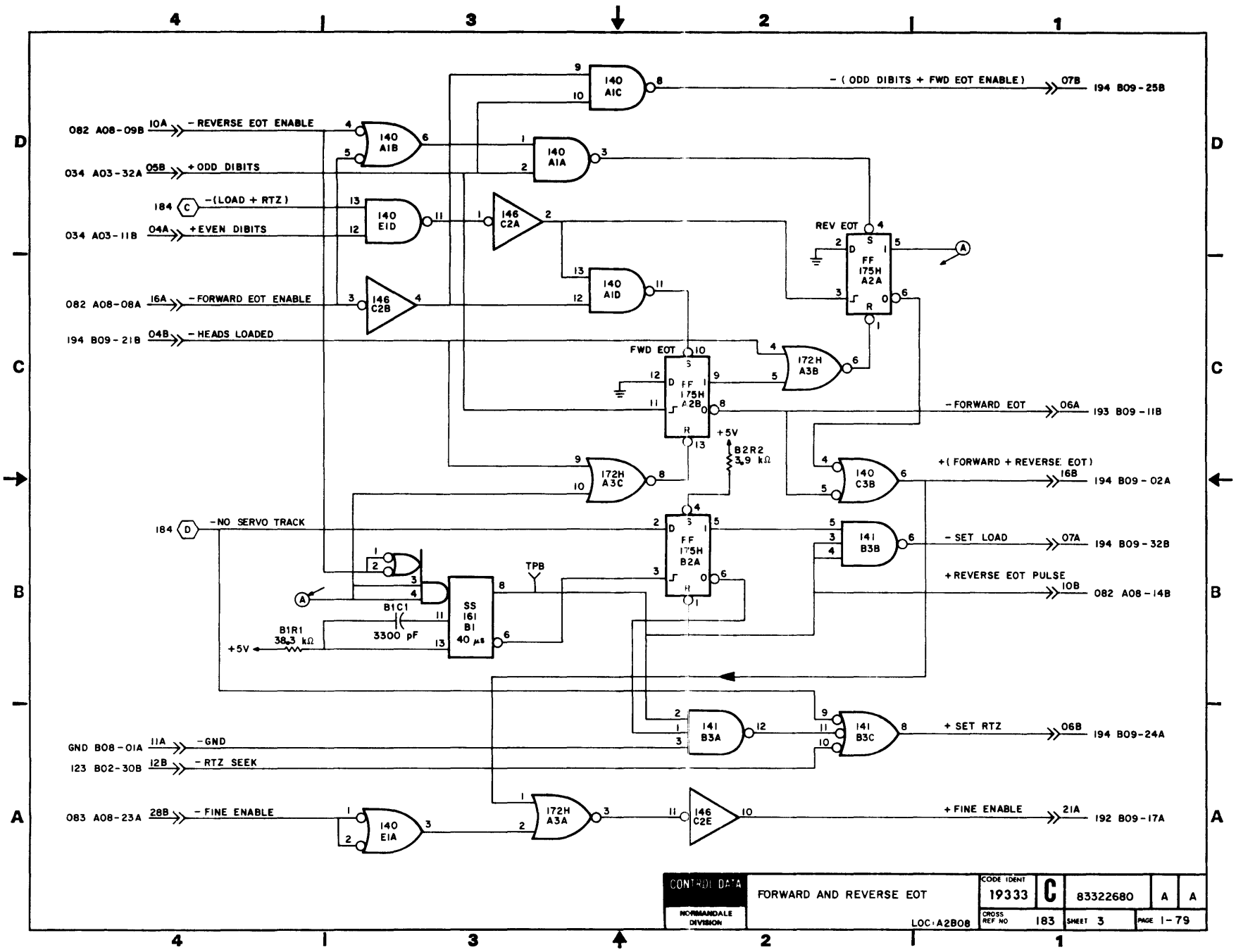
4
3
2
1
D
C
B
A
140 A1C
- (ODD DIBITS + FWD EOT ENABLE)
07B
194 B09-25B
082 A08-09B
10A
- REVERSE EOT ENABLE
140 A1B
140 A1A
034 A03-32A
05B
+ ODD DIBITS
184
C
-(LOAD + RTZ)
140 E1D
034 A03-11B
04A
+ EVEN DIBITS
146 C2A
REV EOT
FF 175H A2A
A
082 A08-08A
16A
- FORWARD EOT ENABLE
146 C2B
140 A1D
194 B09-21B
04B
- HEADS LOADED
FWD EOT
172H A3B
FF 175H A2B
- FORWARD EOT
06A
193 B09-11B
+5V
B2R2
3.9 kΩ
172H A3C
140 C3B
+ (FORWARD + REVERSE EOT)
16B
194 B09-02A
184
D
-NO SERVO TRACK
FF 175H B2A
141 B3B
- SET LOAD
07A
194 B09-32B
TPB
+ REVERSE EOT PULSE
10B
082 A08-14B
B1C1
3300 pF
B1R1
38.3 kΩ
+5V
SS 161 B1 40 µs
141 B3A
141 B3C
+ SET RTZ
06B
194 B09-24A
GND B08-01A
11A
- GND
123 B02-30B
12B
- RTZ SEEK
083 A08-23A
28B
- FINE ENABLE
140 E1A
172H A3A
146 C2E
+ FINE ENABLE
21A
192 B09-17A
CONTROL DATA
NORMANDALE DIVISION
FORWARD AND REVERSE EOT
LOC: A2B08
CODE IDENT
19333
C
83322680
A
A
CROSS REF NO
183
SHEET 3
PAGE 1-79

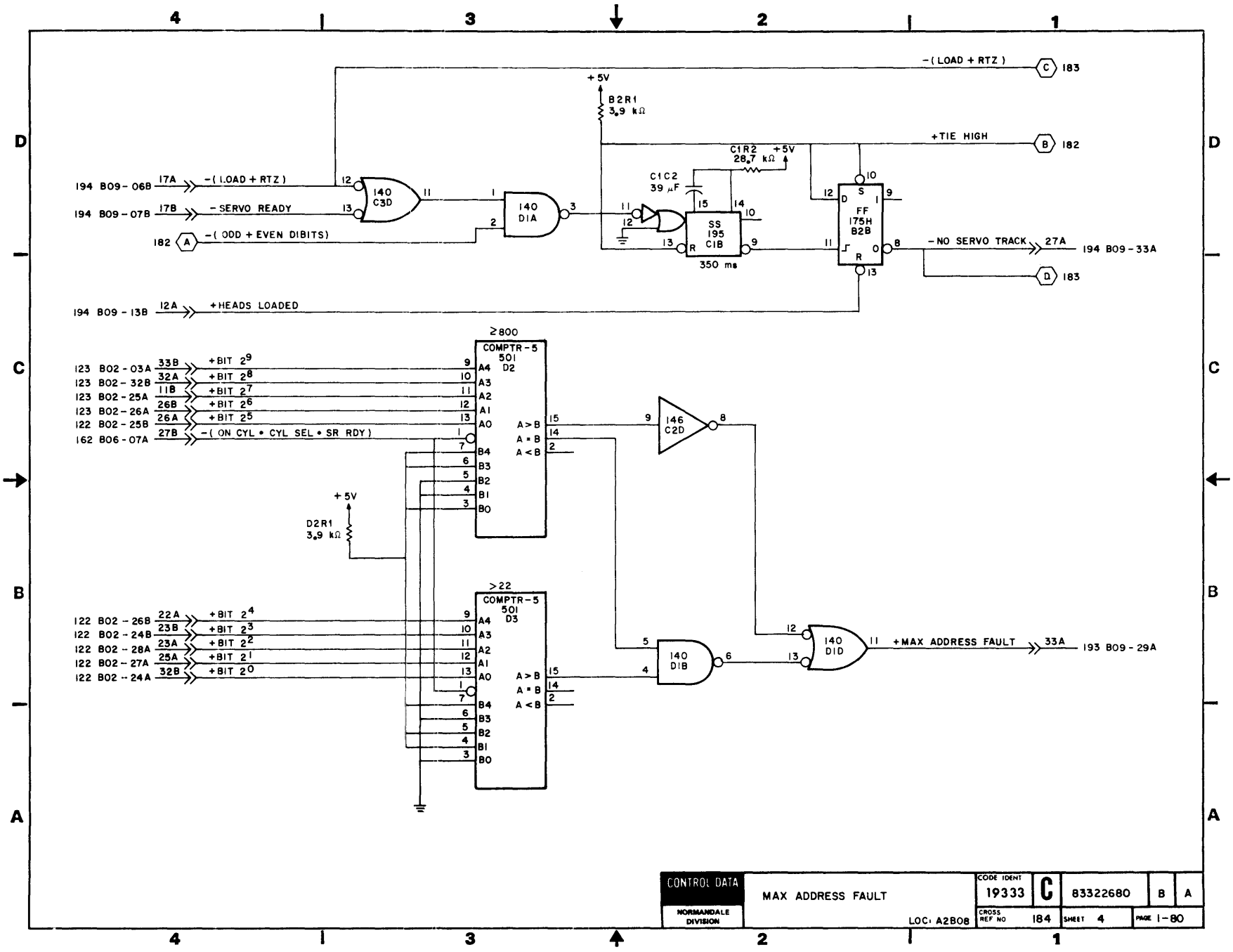
-(LOAD + RTZ)
C 183
+5V
B2R1
3.9 kΩ
+TIE HIGH
B 182
C1R2 +5V
28.7 kΩ
C1C2
39 μF
194 B09 - 06B 17A -(LOAD + RTZ)
194 B09 - 07B 17B - SERVO READY
140 C3D
140 D1A
182 A -(ODD + EVEN DIBITS)
SS 195 C1B
350 ms
FF 175H B2B
-NO SERVO TRACK 27A
194 B09 - 33A
D 183
194 B09 - 13B 12A +HEADS LOADED
≥800
COMPTR-5 501 D2
123 B02 - 03A 33B +BIT 2^9
123 B02 - 32B 32A +BIT 2^8
123 B02 - 25A 11B +BIT 2^7
123 B02 - 26A 26B +BIT 2^6
122 B02 - 25B 26A +BIT 2^5
162 B06 - 07A 27B -(ON CYL • CYL SEL • SR RDY)
A4 A3 A2 A1 A0 B4 B3 B2 B1 B0
A > B A = B A < B
146 C2D
+5V
D2R1
3.9 kΩ
>22
COMPTR-5 501 D3
122 B02 - 26B 22A +BIT 2^4
122 B02 - 24B 23B +BIT 2^3
122 B02 - 28A 23A +BIT 2^2
122 B02 - 27A 25A +BIT 2^1
122 B02 - 24A 32B +BIT 2^0
140 D1B
140 D1D
+MAX ADDRESS FAULT 33A
193 B09 - 29A
CONTROL DATA
NORMANDALE DIVISION
MAX ADDRESS FAULT
LOC: A2B08
CODE IDENT 19333
C
83322680
B
A
CROSS REF NO 184
SHEET 4
PAGE 1-80

REVISION STATUS OF SHEETS

1	2	3	4	5	6	7	8	9	10	11	12	13	14	15	16	17	18	19	20
A	A	A	A																

REVISIONS

REV.	ECO.	DESCRIPTION	DRFT.	DATE	CHK'D
A	PE2300C	RELEASED			

UNUSED LOGIC ELEMENT

ELEMENT TYPE	LOCATION	OUTPUT PIN(S)
172H	D3C	8

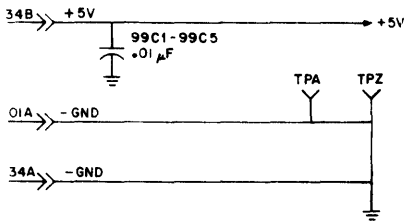

DRAWN	G. RABINE	5-9-77	CONTROL DATA	ACCESS CONTROL NO. 1 DIAGRAMS	CODE IDENT 19333	C	83322680	A	A
CHECKED			NORMANDALE DIVISION	TYPE: MLVV LOC: A2B09	CROSS REF NO 191	SHEET 1 OF 4	PAGE 1-81		
ENGINEER									
APPROVED									

REF 83215716

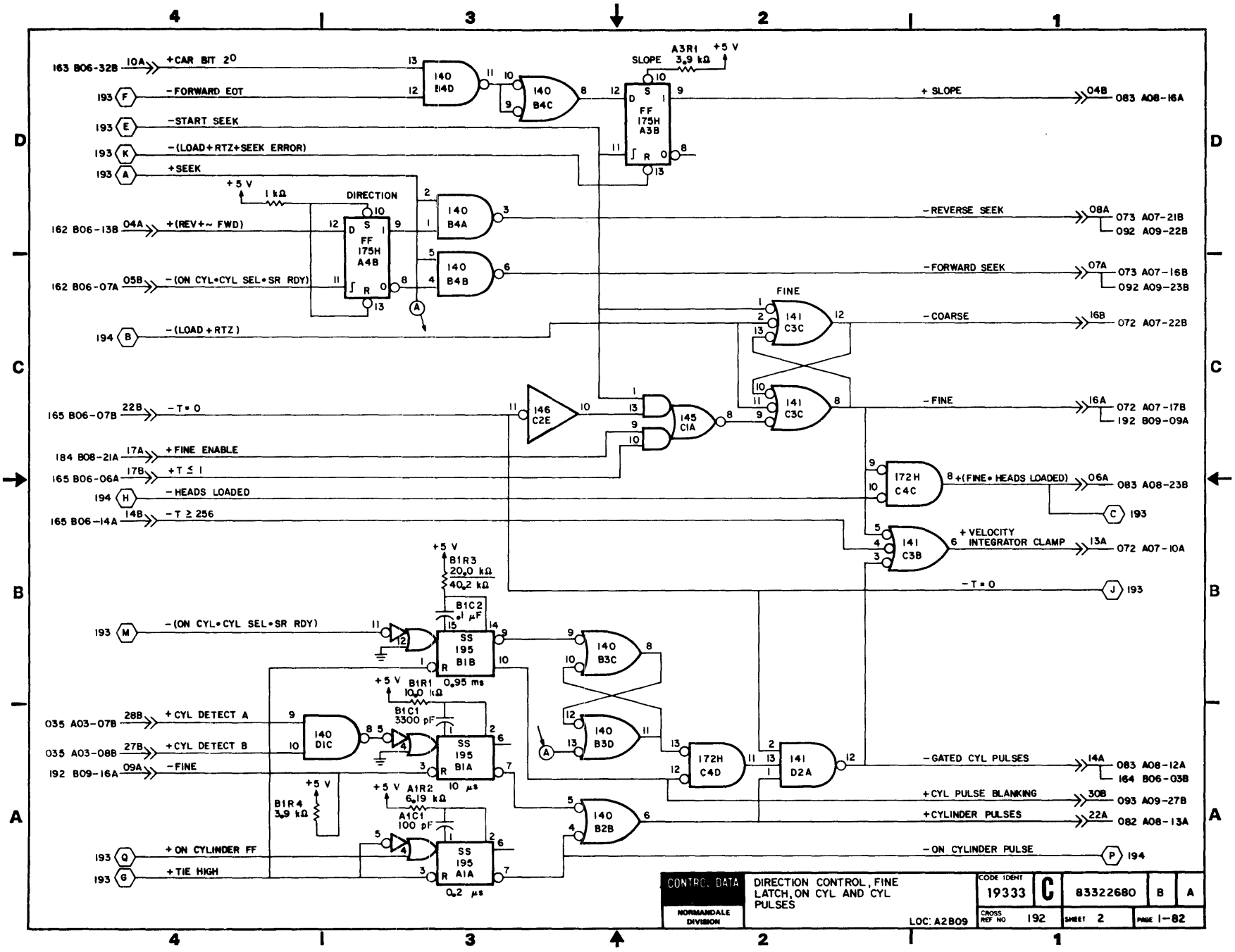
+CAR BIT 2^0
-FORWARD EOT
-START SEEK
-(LOAD+RTZ+SEEK ERROR)
+SEEK
+(REV+~ FWD)
-(ON CYL•CYL SEL•SR RDY)
-(LOAD+RTZ)
DIRECTION
SLOPE
A3R1 3,9 kΩ
+5 V
1 kΩ
140 B4D
140 B4C
FF 175H A3B
140 B4A
140 B4B
FF 175H A4B
+ SLOPE
-REVERSE SEEK
-FORWARD SEEK
FINE
141 C3C
-COARSE
-FINE
146 C2E
145 C1A
-T = 0
+FINE ENABLE
+T ≤ 1
-HEADS LOADED
-T ≥ 256
172H C4C
+(FINE• HEADS LOADED)
141 C3B
+ VELOCITY INTEGRATOR CLAMP
B1R3 20,0 kΩ 40,2 kΩ
B1C2 .1 μF
SS 195 B1B
0,95 ms
B1R1 10,0 kΩ
B1C1 3300 pF
SS 195 B1A
10 μs
A1R2 6,19 kΩ
A1C1 100 pF
SS 195 A1A
0,2 μs
B1R4 3,9 kΩ
140 B3C
140 B3D
140 B2B
140 D1C
172H C4D
141 D2A
-(ON CYL•CYL SEL•SR RDY)
+CYL DETECT A
+CYL DETECT B
-FINE
+ON CYLINDER FF
+TIE HIGH
-GATED CYL PULSES
+CYL PULSE BLANKING
+CYLINDER PULSES
-ON CYLINDER PULSE
163 B06-32B 10A
193 F
193 E
193 K
193 A
162 B06-13B 04A
162 B06-07A 05B
194 B
165 B06-07B 22B
184 B08-21A 17A
165 B06-06A 17B
194 H
165 B06-14A 14B
193 M
035 A03-07B 28B
035 A03-08B 27B
192 B09-16A 09A
193 Q
193 G
04B 083 A08-16A
08A 073 A07-21B 092 A09-22B
07A 073 A07-16B 092 A09-23B
16B 072 A07-22B
16A 072 A07-17B 192 B09-09A
06A 083 A08-23B
C 193
13A 072 A07-10A
J 193
14A 083 A08-12A 164 B06-03B
30B 093 A09-27B
22A 082 A08-13A
P 194
CONTRL DATA
NORMANDALE DIVISION
DIRECTION CONTROL, FINE LATCH, ON CYL AND CYL PULSES
LOC: A2B09
CODE IDENT 19333
C
83322680
B
A
CROSS REF NO 192
SHEET 2
PAGE 1-82

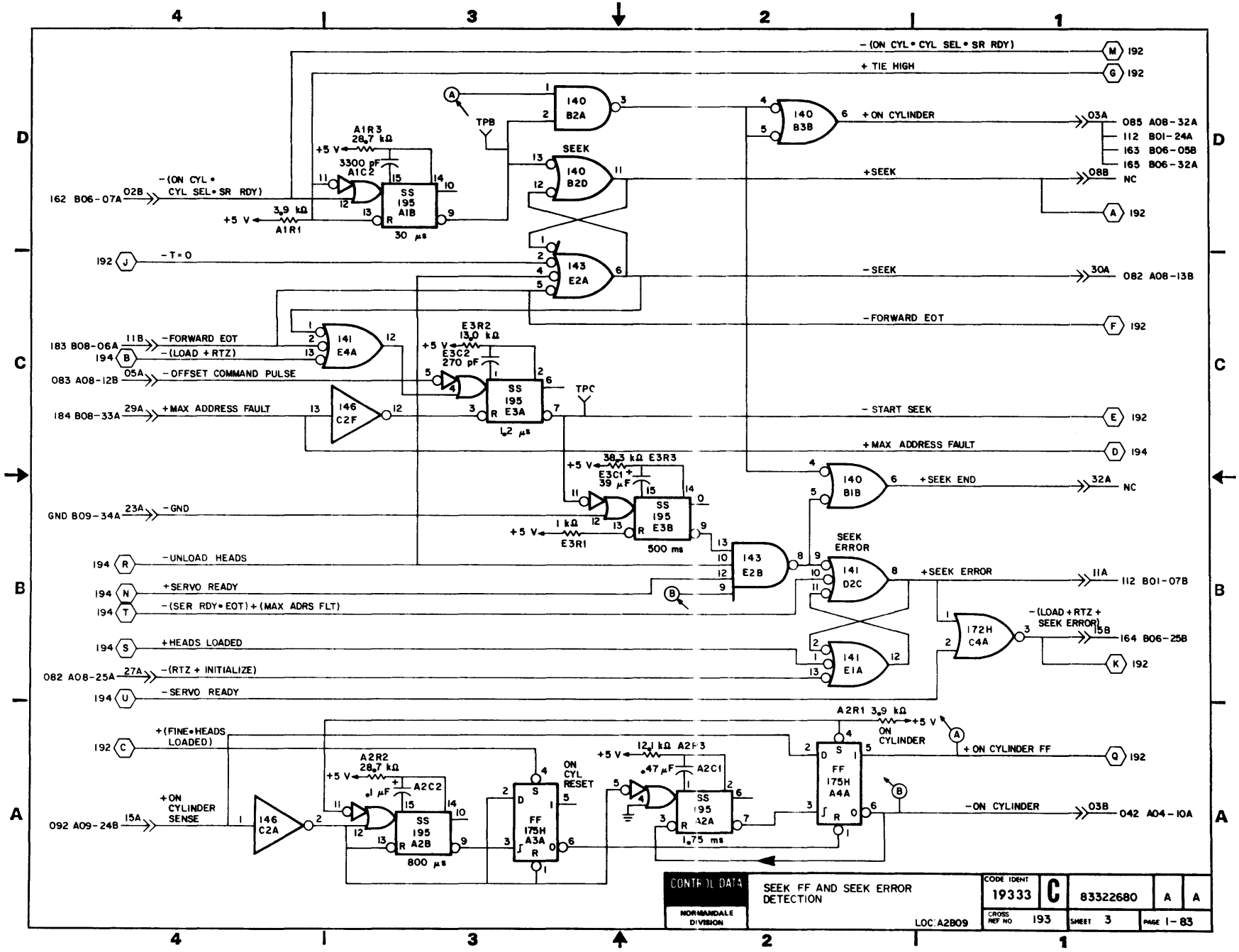
-(ON CYL • CYL SEL • SR RDY)
+ TIE HIGH
140 B2A
TPB
A1R3 28.7 kΩ
+5 V
3300 pF A1C2
SS 195 A1B
30 µs
3.9 kΩ A1R1
162 B06-07A
02B
-(ON CYL • CYL SEL • SR RDY)
SEEK
140 B2D
140 B3B
+ON CYLINDER
03A
085 A08-32A
112 B01-24A
163 B06-05B
165 B06-32A
+SEEK
08B
NC
192 J
-T=0
143 E2A
-SEEK
30A
082 A08-13B
-FORWARD EOT
183 B08-06A
11B
194 B
-(LOAD + RTZ)
141 E4A
E3R2 13.0 kΩ
E3C2 270 pF
083 A08-12B
05A
-OFFSET COMMAND PULSE
SS 195 E3A
4.2 µs
TPC
184 B08-33A
29A
+MAX ADDRESS FAULT
146 C2F
- START SEEK
+MAX ADDRESS FAULT
38.3 kΩ E3R3
E3C1 39 µF
SS 195 E3B
500 ms
1 kΩ E3R1
140 B1B
+SEEK END
32A
NC
GND B09-34A
23A
-GND
SEEK ERROR
194 R
-UNLOAD HEADS
143 E2B
141 D2C
+SEEK ERROR
11A
112 B01-07B
194 N
+SERVO READY
194 T
-(SER RDY • EOT) + (MAX ADRS FLT)
-(LOAD + RTZ + SEEK ERROR)
172H C4A
15B
164 B06-25B
194 S
+HEADS LOADED
141 E1A
082 A08-25A
27A
-(RTZ + INITIALIZE)
194 U
-SERVO READY
A2R1 3.9 kΩ
+5 V
ON CYLINDER
+(FINE • HEADS LOADED)
192 C
+ON CYLINDER FF
192 Q
A2R2 28.7 kΩ
.1 µF A2C2
ON CYL RESET
12.1 kΩ A2R3
.47 µF A2C1
FF 175H A4A
+ON CYLINDER SENSE
092 A09-24B
15A
146 C2A
SS 195 A2B
800 µs
SS 195 A2A
1.75 ms
FF 175H A3A
-ON CYLINDER
03B
042 A04-10A
CONTROL DATA
NORMANDALE DIVISION
SEEK FF AND SEEK ERROR DETECTION
LOC:A2B09
CODE IDENT 19333
C
83322680
A
A
CROSS REF NO 193
SHEET 3
PAGE 1-83

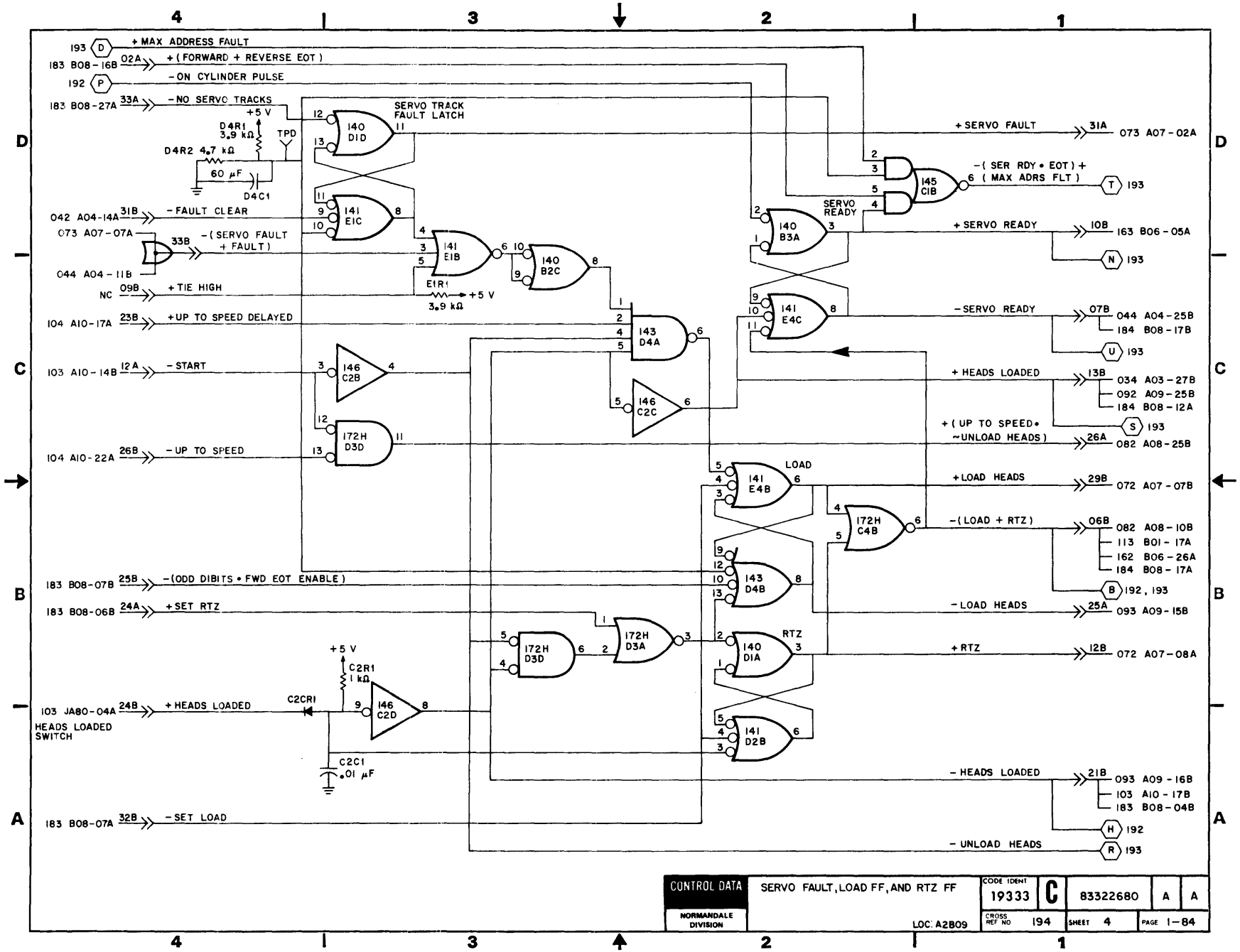
193 D + MAX ADDRESS FAULT
183 B08-16B 02A + (FORWARD + REVERSE EOT)
192 P - ON CYLINDER PULSE
183 B08-27A 33A - NO SERVO TRACKS
+5 V
D4R1 3.9 kΩ
TPD
D4R2 4.7 kΩ
60 μF
D4C1
SERVO TRACK FAULT LATCH
140 D1D
141 E1C
042 A04-14A 31B - FAULT CLEAR
073 A07-07A
33B - (SERVO FAULT + FAULT)
044 A04-11B
141 E1B
E1R1 3.9 kΩ +5 V
NC 09B + TIE HIGH
140 B2C
104 A10-17A 23B +UP TO SPEED DELAYED
143 D4A
146 C2C
103 A10-14B 12A - START
146 C2B
172H D3D
104 A10-22A 26B - UP TO SPEED
183 B08-07B 25B -(ODD DIBITS • FWD EOT ENABLE)
183 B08-06B 24A +SET RTZ
172H D3D
172H D3A
+5 V
C2R1 1 kΩ
C2CR1
103 JA80-04A 24B + HEADS LOADED
HEADS LOADED SWITCH
146 C2D
C2C1 .01 μF
183 B08-07A 32B - SET LOAD
145 C1B
-(SER RDY • EOT) + (MAX ADRS FLT)
T 193
SERVO READY
140 B3A
+ SERVO READY 10B 163 B06-05A
N 193
141 E4C
- SERVO READY 07B 044 A04-25B 184 B08-17B
U 193
+ SERVO FAULT 31A 073 A07-02A
+ HEADS LOADED 13B 034 A03-27B 092 A09-25B 184 B08-12A
S 193
+ (UP TO SPEED • ~UNLOAD HEADS) 26A 082 A08-25B
LOAD
141 E4B
+ LOAD HEADS 29B 072 A07-07B
172H C4B
-(LOAD + RTZ) 06B 082 A08-10B 113 B01-17A 162 B06-26A 184 B08-17A
B 192, 193
143 D4B
- LOAD HEADS 25A 093 A09-15B
RTZ
140 D1A
+ RTZ 12B 072 A07-08A
141 D2B
- HEADS LOADED 21B 093 A09-16B 103 A10-17B 183 B08-04B
H 192
- UNLOAD HEADS
R 193
CONTROL DATA
NORMANDALE DIVISION
SERVO FAULT, LOAD FF, AND RTZ FF
LOC: A2B09
CODE IDENT 19333 C
83322680 A A
CROSS REF NO 194
SHEET 4
PAGE 1-84

REVISION STATUS OF SHEETS

1	2	3	4	5	6	7	8	9	10	11	12	13	14	15	16	17	18	19	20
A	A	A																	

REVISIONS

REV	ECO	DESCRIPTION	DRFT.	DATE	CHK'D
A	PE23000	RELEASED			

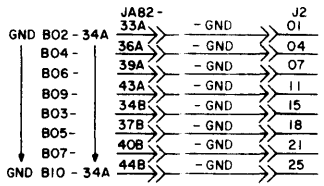

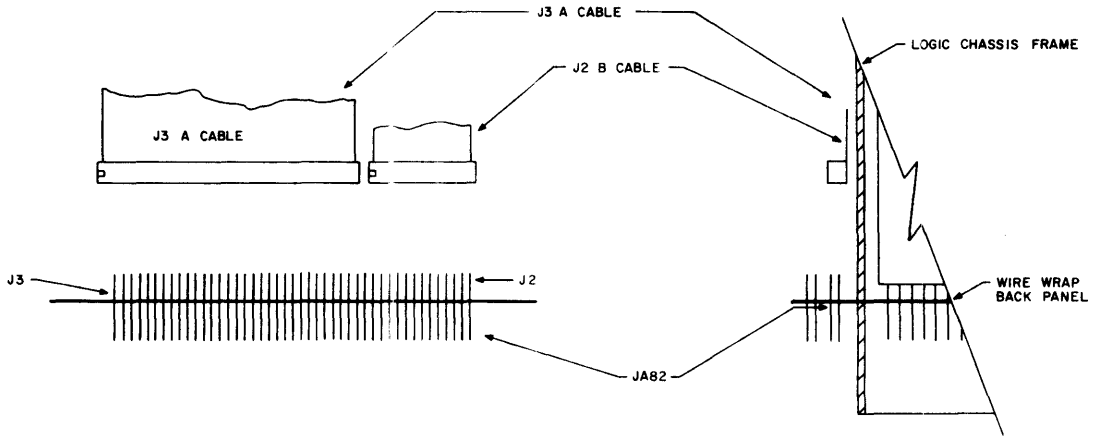

DRAWN	G. RABINE	3-24-71	CONTROL DATA	I/O DIAGRAMS	CODE IDENT 19333	C	83322680	A A
CHECKED			NORMANDALE DIVISION	TYPE AXYV LOC:A2C1	CROSS REF NO 231		SHEET 1 OF 3	PAGE 1-85
ENGINEER								
APPROVED								

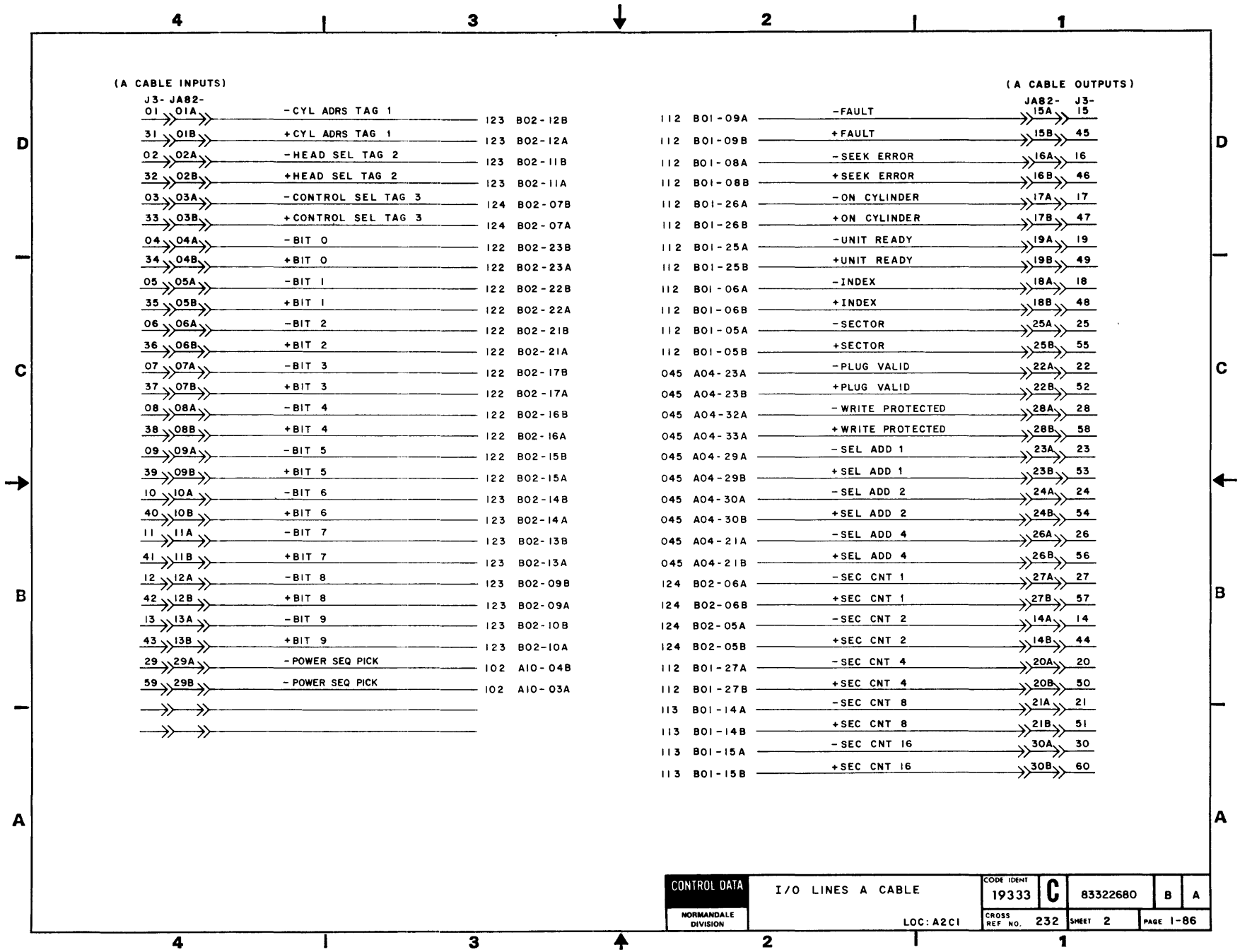
(A CABLE INPUTS)
J3- JA82-
01 01A -CYL ADRS TAG 1 123 B02-12B
31 01B +CYL ADRS TAG 1 123 B02-12A
02 02A -HEAD SEL TAG 2 123 B02-11B
32 02B +HEAD SEL TAG 2 123 B02-11A
03 03A -CONTROL SEL TAG 3 124 B02-07B
33 03B +CONTROL SEL TAG 3 124 B02-07A
04 04A -BIT 0 122 B02-23B
34 04B +BIT 0 122 B02-23A
05 05A -BIT 1 122 B02-22B
35 05B +BIT 1 122 B02-22A
06 06A -BIT 2 122 B02-21B
36 06B +BIT 2 122 B02-21A
07 07A -BIT 3 122 B02-17B
37 07B +BIT 3 122 B02-17A
08 08A -BIT 4 122 B02-16B
38 08B +BIT 4 122 B02-16A
09 09A -BIT 5 122 B02-15B
39 09B +BIT 5 122 B02-15A
10 10A -BIT 6 123 B02-14B
40 10B +BIT 6 123 B02-14A
11 11A -BIT 7 123 B02-13B
41 11B +BIT 7 123 B02-13A
12 12A -BIT 8 123 B02-09B
42 12B +BIT 8 123 B02-09A
13 13A -BIT 9 123 B02-10B
43 13B +BIT 9 123 B02-10A
29 29A -POWER SEQ PICK 102 A10-04B
59 29B -POWER SEQ PICK 102 A10-03A
(A CABLE OUTPUTS)
112 B01-09A -FAULT JA82-15A J3-15
112 B01-09B +FAULT 15B 45
112 B01-08A -SEEK ERROR 16A 16
112 B01-08B +SEEK ERROR 16B 46
112 B01-26A -ON CYLINDER 17A 17
112 B01-26B +ON CYLINDER 17B 47
112 B01-25A -UNIT READY 19A 19
112 B01-25B +UNIT READY 19B 49
112 B01-06A -INDEX 18A 18
112 B01-06B +INDEX 18B 48
112 B01-05A -SECTOR 25A 25
112 B01-05B +SECTOR 25B 55
045 A04-23A -PLUG VALID 22A 22
045 A04-23B +PLUG VALID 22B 52
045 A04-32A -WRITE PROTECTED 28A 28
045 A04-33A +WRITE PROTECTED 28B 58
045 A04-29A -SEL ADD 1 23A 23
045 A04-29B +SEL ADD 1 23B 53
045 A04-30A -SEL ADD 2 24A 24
045 A04-30B +SEL ADD 2 24B 54
045 A04-21A -SEL ADD 4 26A 26
045 A04-21B +SEL ADD 4 26B 56
124 B02-06A -SEC CNT 1 27A 27
124 B02-06B +SEC CNT 1 27B 57
124 B02-05A -SEC CNT 2 14A 14
124 B02-05B +SEC CNT 2 14B 44
112 B01-27A -SEC CNT 4 20A 20
112 B01-27B +SEC CNT 4 20B 50
113 B01-14A -SEC CNT 8 21A 21
113 B01-14B +SEC CNT 8 21B 51
113 B01-15A -SEC CNT 16 30A 30
113 B01-15B +SEC CNT 16 30B 60
CONTROL DATA
NORMANDALE DIVISION
I/O LINES A CABLE
LOC: A2C1
CODE IDENT 19333
C
83322680
B
A
CROSS REF NO. 232
SHEET 2
PAGE 1-86

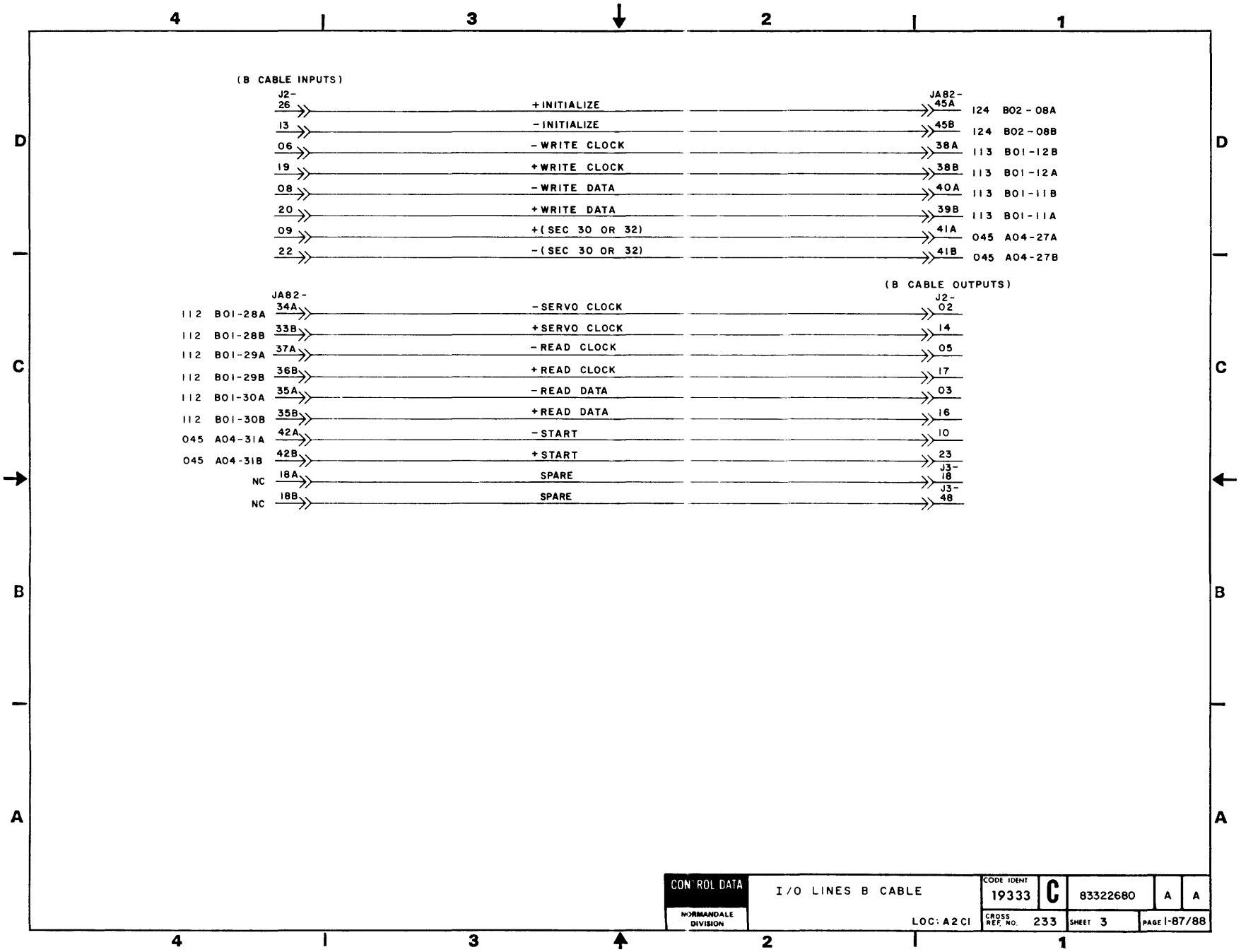
(B CABLE INPUTS)
J2-
26 +INITIALIZE
13 -INITIALIZE
06 -WRITE CLOCK
19 +WRITE CLOCK
08 -WRITE DATA
20 +WRITE DATA
09 +(SEC 30 OR 32)
22 -(SEC 30 OR 32)
JA82-
45A 124 B02-08A
45B 124 B02-08B
38A 113 B01-12B
38B 113 B01-12A
40A 113 B01-11B
39B 113 B01-11A
41A 045 A04-27A
41B 045 A04-27B
(B CABLE OUTPUTS)
JA82-
112 B01-28A 34A -SERVO CLOCK
112 B01-28B 33B +SERVO CLOCK
112 B01-29A 37A -READ CLOCK
112 B01-29B 36B +READ CLOCK
112 B01-30A 35A -READ DATA
112 B01-30B 35B +READ DATA
045 A04-31A 42A -START
045 A04-31B 42B +START
NC 18A SPARE
NC 18B SPARE
J2-
02
14
05
17
03
16
10
23
J3-
18
J3-
48
4
3
2
1
D
C
B
A
CONTROL DATA
NORMANDALE DIVISION
I/O LINES B CABLE
LOC: A2 C1
CODE IDENT 19333
C
83322680
A
A
CROSS REF. NO. 233
SHEET 3
PAGE 1-87/88

REVISION STATUS OF SHEETS

1	2	3	4	5	6	7	8	9	10	11	12	13	14	15	16	17	18	19	20
A	A																		

REVISIONS

REV.	ECO.	DESCRIPTION	DRFT.	DATE	CHK'D
A	PE 23000	RELEASED			

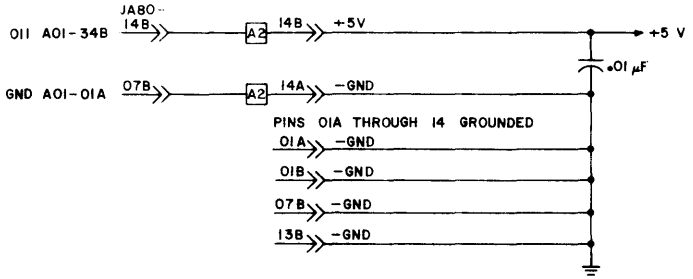

CONTROL PANEL
(COMPONENT LAYOUT)

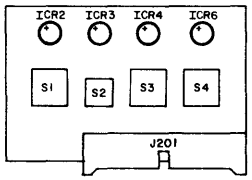

DRAWN		CONTROL DATA	CONTROL PANEL DIAGRAMS	CODE IDENT 19333	C	83322680	A A
CHECKED							
ENGINEER		NORMANDALE DIVISION	TYPE: HZYN LOC:A3A01	CROSS REF NO 251		SHEET 1 OF 2	PAGE 1-89
APPROVED							

REF 83215718

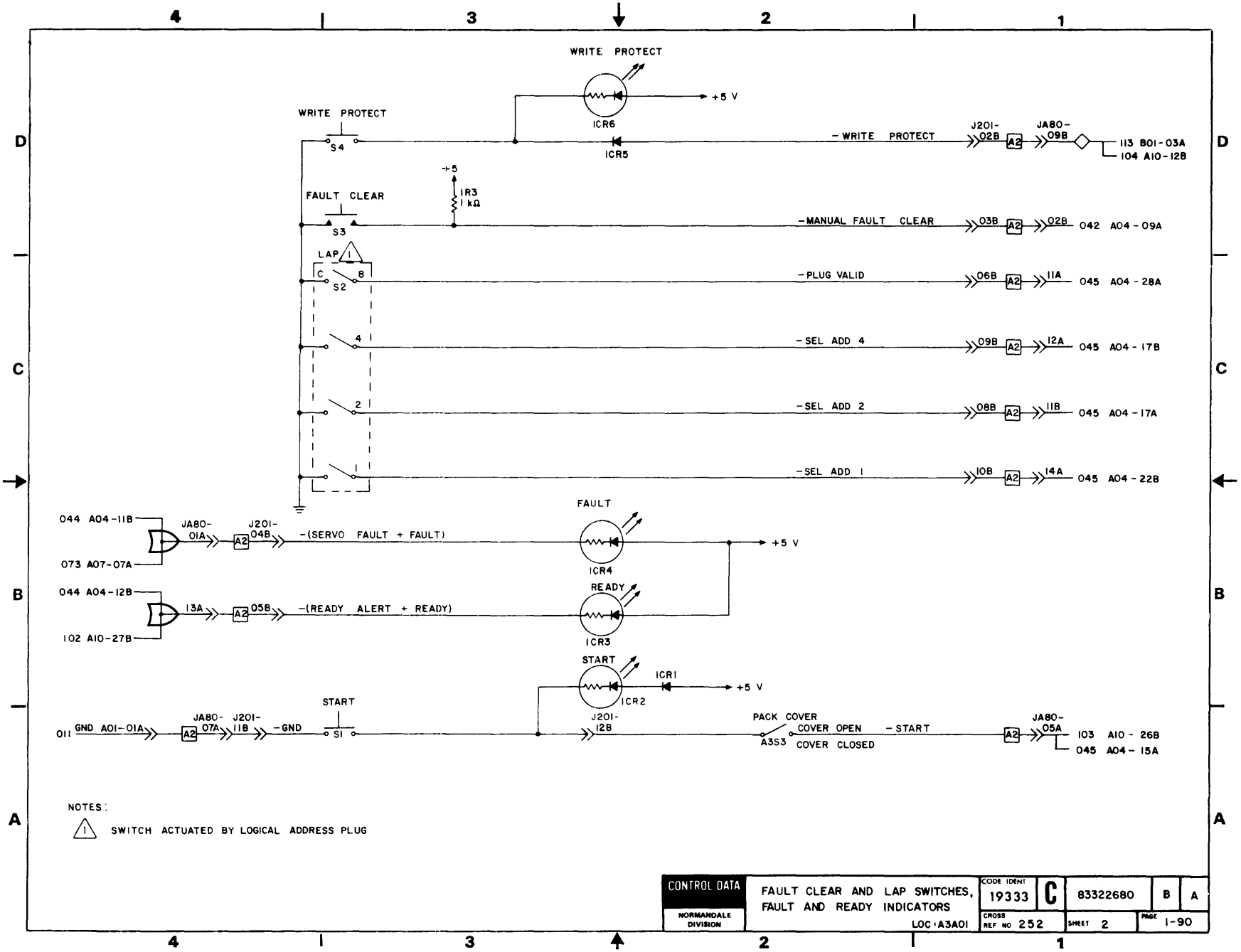
WRITE PROTECT
+5 V
ICR6
WRITE PROTECT
S4
ICR5
-WRITE PROTECT
J201-02B
A2
JA80-09B
113 B01-03A
104 A10-12B
+5
1R3
1 kΩ
FAULT CLEAR
S3
-MANUAL FAULT CLEAR
03B
A2
02B
042 A04-09A
LAP
1
C
8
S2
-PLUG VALID
06B
A2
11A
045 A04-28A
4
-SEL ADD 4
09B
A2
12A
045 A04-17B
2
-SEL ADD 2
08B
A2
11B
045 A04-17A
1
-SEL ADD 1
10B
A2
14A
045 A04-22B
044 A04-11B
073 A07-07A
JA80-01A
J201-04B
A2
-(SERVO FAULT + FAULT)
FAULT
ICR4
+5 V
044 A04-12B
102 A10-27B
13A
A2
05B
-(READY ALERT + READY)
READY
ICR3
START
ICR1
+5 V
ICR2
011 GND A01-01A
JA80-07A
A2
J201-11B
-GND
START
S1
J201-12B
PACK COVER
COVER OPEN
COVER CLOSED
A3S3
-START
JA80-05A
A2
103 A10-26B
045 A04-15A
NOTES:
1 SWITCH ACTUATED BY LOGICAL ADDRESS PLUG
CONTROL DATA
NORMANDALE DIVISION
FAULT CLEAR AND LAP SWITCHES, FAULT AND READY INDICATORS
LOC 'A3A01
CODE IDENT 19333
C
83322680
B
A
CROSS REF NO 252
SHEET 2
PAGE 1-90

REVISION STATUS OF SHEETS

1	2	3	4	5	6	7	8	9	10	11	12	13	14	15	16	17	18	19	20
A	A	A																	

REVISIONS

REV	ECO	DESCRIPTION	DRFT	DATE	CHK'D
A	PE 23000	RELEASED			

J101 - 01B, 02A, 03A, 04A, 05A, 05B, 06A, 06B, 07B

J102 - 11, 08, 07, 06, 05, 04, 03, 02, 01

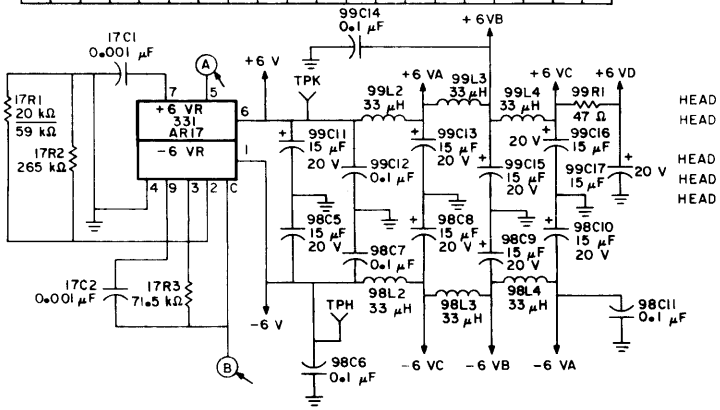

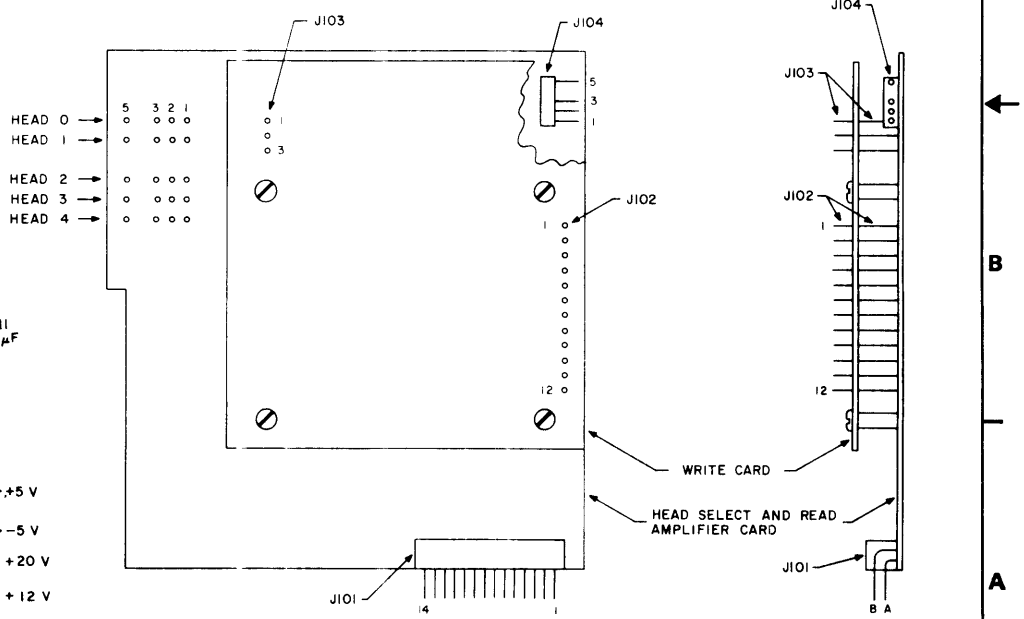

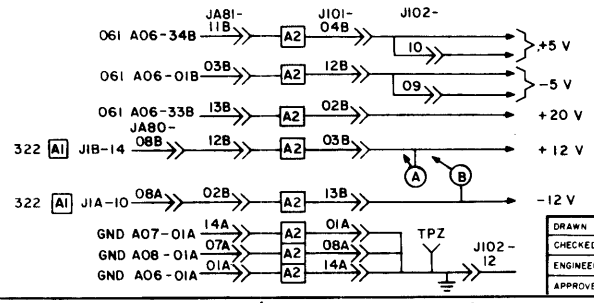

DRAWN	Stephen Smith	3/10/77
CHECKED		
ENGINEER		
APPROVED		

CONTROL DATA
NORMANDALE DIVISION

HEAD SELECT AND READ AMPLIFIER DIAGRAMS
TYPE NZJN LOC: A3A02

CODE IDENT				
19333	C	83322680	A	A
CROSS REF NO 261		SHEET 1 OF 3	PAGE 1-91	

REF 83215719

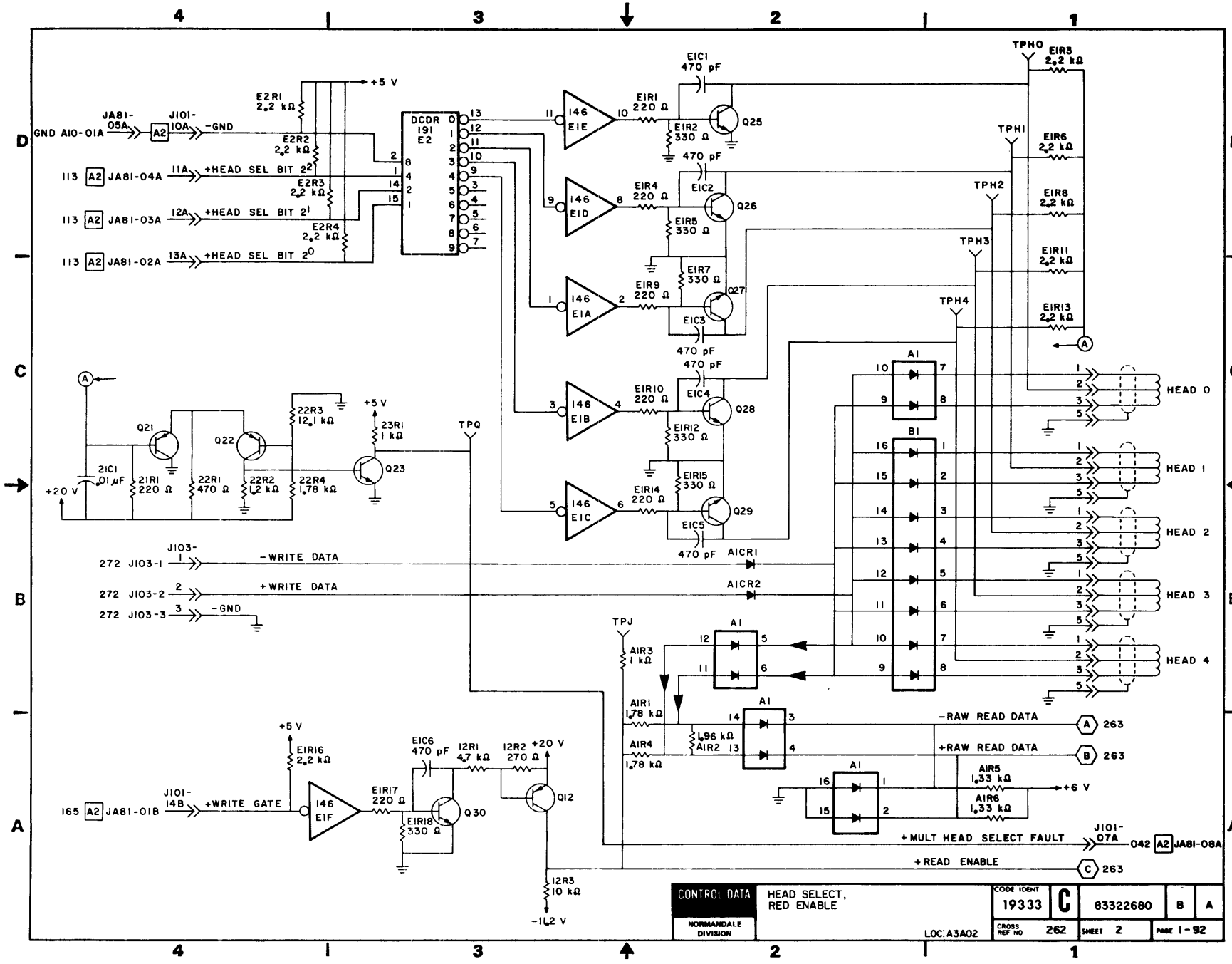
+5 V
E2R1 2.2 kΩ
E2R2 2.2 kΩ
E2R3 2.2 kΩ
E2R4 2.2 kΩ
JA81-05A
J101-10A
GND AIO-01A
-GND
+HEAD SEL BIT 2^2
+HEAD SEL BIT 2^1
+HEAD SEL BIT 2^0
DCDR 191 E2
146 E1E
146 E1D
146 E1A
146 E1B
146 E1C
EIC1 470 pF
EIR1 220 Ω
EIR2 330 Ω
Q25
EIC2
EIR4 220 Ω
EIR5 330 Ω
Q26
EIR7 330 Ω
EIR9 220 Ω
Q27
EIC3
EIR10 220 Ω
EIC4
Q28
EIR12 330 Ω
EIR14 220 Ω
EIR15 330 Ω
Q29
EIC5
TPH0
EIR3 2.2 kΩ
TPH1
EIR6 2.2 kΩ
TPH2
EIR8 2.2 kΩ
TPH3
EIR11 2.2 kΩ
TPH4
EIR13 2.2 kΩ
A1
B1
HEAD 0
HEAD 1
HEAD 2
HEAD 3
HEAD 4
Q21
Q22
Q23
21C1 .01 μF
21R1 220 Ω
22R1 470 Ω
22R2 1.2 kΩ
22R3 12.1 kΩ
22R4 1.78 kΩ
23R1 1 kΩ
+20 V
TPQ
J103-1 -WRITE DATA
J103-2 +WRITE DATA
J103-3 -GND
AICR1
AICR2
TPJ
AIR3 1 kΩ
AIR1 1.78 kΩ
AIR4 1.78 kΩ
1.96 kΩ AIR2
-RAW READ DATA
+RAW READ DATA
AIR5 1.33 kΩ
AIR6 1.33 kΩ
+6 V
+MULT HEAD SELECT FAULT
+READ ENABLE
J101-07A
042 A2 JA81-08A
263
JA81-01B
J101-14B +WRITE GATE
EIR16 2.2 kΩ
EIR17 220 Ω
EIR18 330 Ω
Q30
EIC6 470 pF
12R1 4.7 kΩ
12R2 270 Ω
Q12
12R3 10 kΩ
-11.2 V
CONTROL DATA
NORMANDALE DIVISION
HEAD SELECT, RED ENABLE
LOC: A3A02
CODE IDENT 19333
C
83322680
B
A
CROSS REF NO 262
SHEET 2
PAGE 1-92

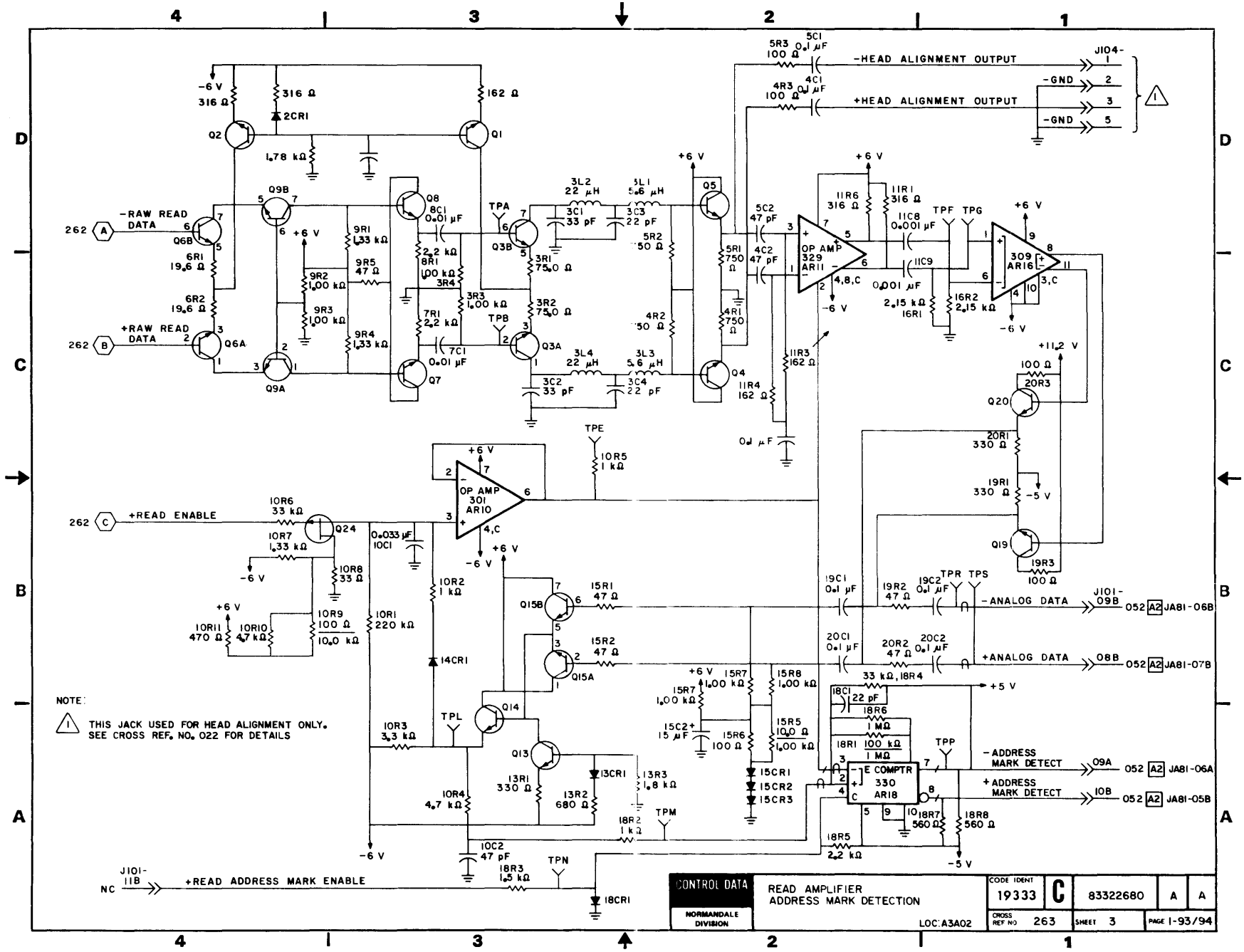
-HEAD ALIGNMENT OUTPUT
-GND
+HEAD ALIGNMENT OUTPUT
-GND
J104-
-RAW READ DATA
+RAW READ DATA
OP AMP 329 AR11
309 AR16
OP AMP 301 AR10
+READ ENABLE
-ANALOG DATA
+ANALOG DATA
-ADDRESS MARK DETECT
+ADDRESS MARK DETECT
E COMPTR 330 AR18
+READ ADDRESS MARK ENABLE
NOTE:
THIS JACK USED FOR HEAD ALIGNMENT ONLY. SEE CROSS REF. NO. 022 FOR DETAILS
CONTROL DATA
NORMANDALE DIVISION
READ AMPLIFIER
ADDRESS MARK DETECTION
LOC:A3A02
CODE IDENT 19333
C
83322680
A
A
CROSS REF NO 263
SHEET 3
PAGE 1-93/94

REVISION STATUS OF SHEETS

1	2	3	4	5	6	7	8	9	10	11	12	13	14	15	16	17	18	19	20
A	A	A	A																
B	B	A	A																

REVISIONS

REV.	ECO.	DESCRIPTION	DRFT.	BASE.	CHK'D
A	PE23000	RELEASED			
B		DIAGRAM CORRECTION	A A O	6-25-76	

UNUSED LOGIC ELEMENTS

TYPE	LOCATION	OUTPUT PIN(S)
200	D 3	12
140	C 4	3

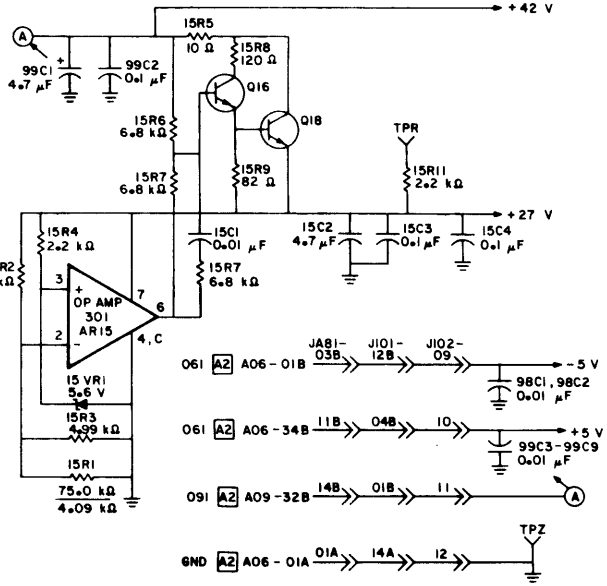

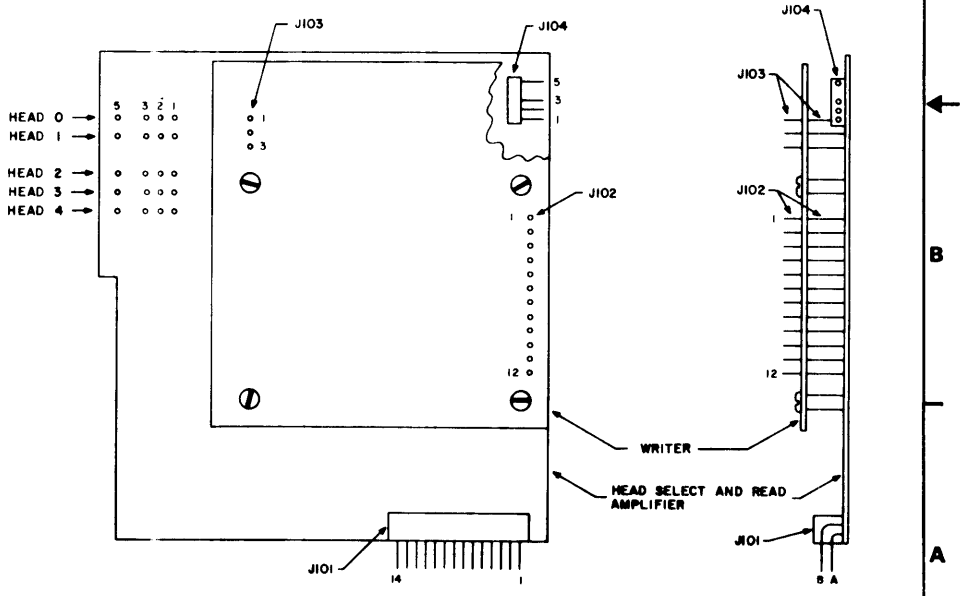

DRAWN	M Cochran 3-12-76	NORMANDALE DIVISION	WRITER DIAGRAMS	CODE IDENT. 19333	C	83322680	E B
CHECKED							
ENGINEER			TYPE: EZKN LOC A3A03	CROSS REF NO 271	SHEET 1 of 4	PAGE 1-96	
APPROVED							

1 REF 83219720

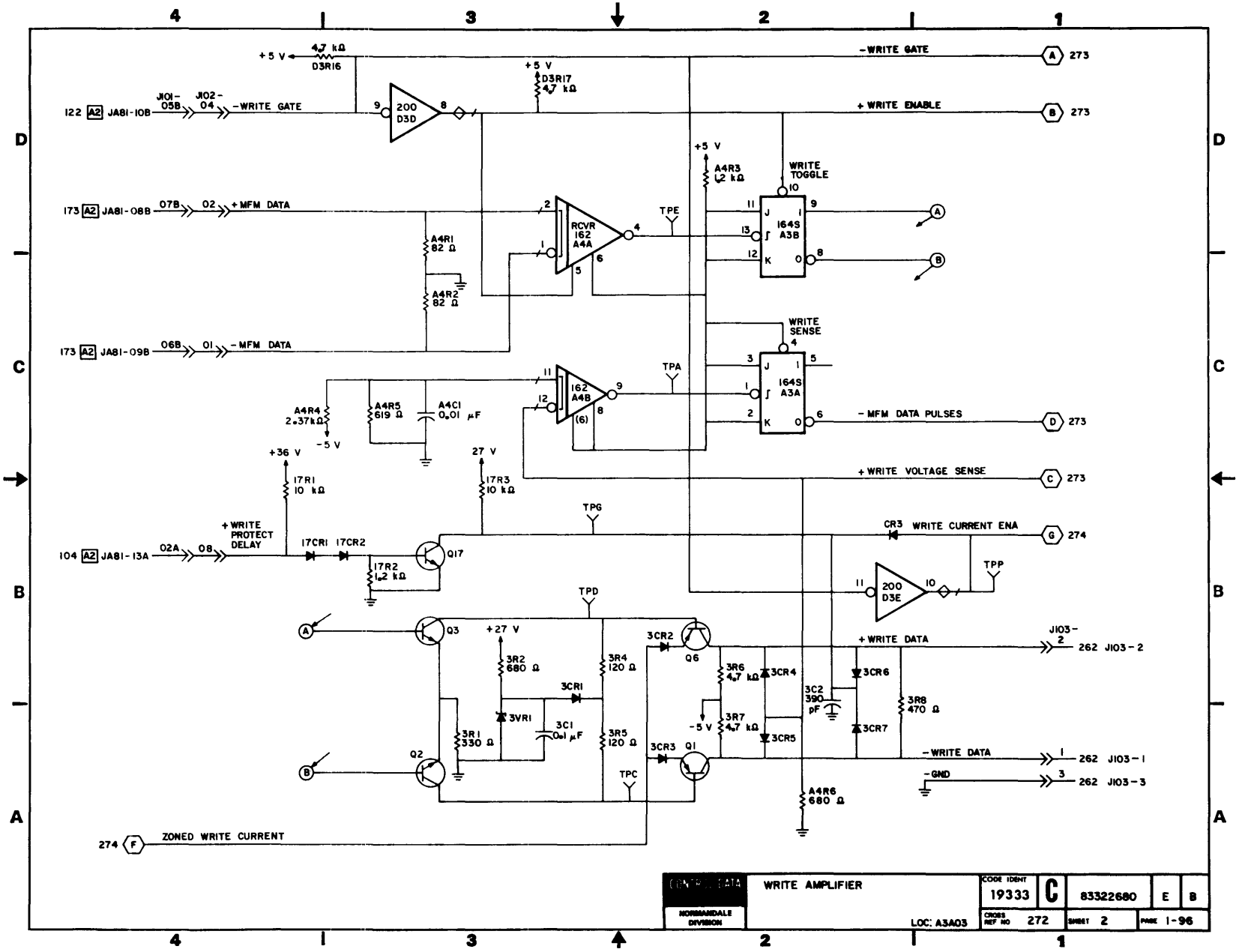
+5 V
4.7 kΩ
D3R16
+5 V
D3R17
4.7 kΩ
-WRITE GATE
A 273
122 A2 JA8I-10B
J101-05B
J102-04
-WRITE GATE
200 D3D
+WRITE ENABLE
B 273
+5 V
A4R3 1.2 kΩ
WRITE TOGGLE
173 A2 JA8I-08B
07B
02
+MFM DATA
RCVR 162 A4A
TPE
164S A3B
A4R1 82 Ω
A4R2 82 Ω
173 A2 JA8I-09B
06B
01
-MFM DATA
WRITE SENSE
TPA
162 A4B
164S A3A
A4R4 2.37kΩ
-5 V
A4R5 619 Ω
A4C1 0.01 μF
-MFM DATA PULSES
D 273
+36 V
27 V
17R1 10 kΩ
17R3 10 kΩ
+WRITE VOLTAGE SENSE
C 273
TPG
+WRITE PROTECT DELAY
104 A2 JA8I-13A
02A
08
17CR1
17CR2
17R2 1.2 kΩ
Q17
CR3 WRITE CURRENT ENA
G 274
200 D3E
TPP
TPD
Q3
+27 V
3R2 680 Ω
3R4 120 Ω
3CR1
3VR1
3C1 0.1 μF
3R1 330 Ω
3R5 120 Ω
Q2
TPC
3CR2
Q6
3R6 4.7 kΩ
3CR4
3C2 390 pF
3CR6
3R8 470 Ω
-5 V
3R7 4.7 kΩ
3CR5
3CR7
3CR3
Q1
+WRITE DATA
J103-2
262 J103-2
-WRITE DATA
1
262 J103-1
-GND
3
262 J103-3
A4R6 680 Ω
274 F ZONED WRITE CURRENT
WRITE AMPLIFIER
LOC: A3A03
CODE IDENT 19333
C
83322680
E
B
CROSS REF NO 272
SHEET 2
PAGE 1-96

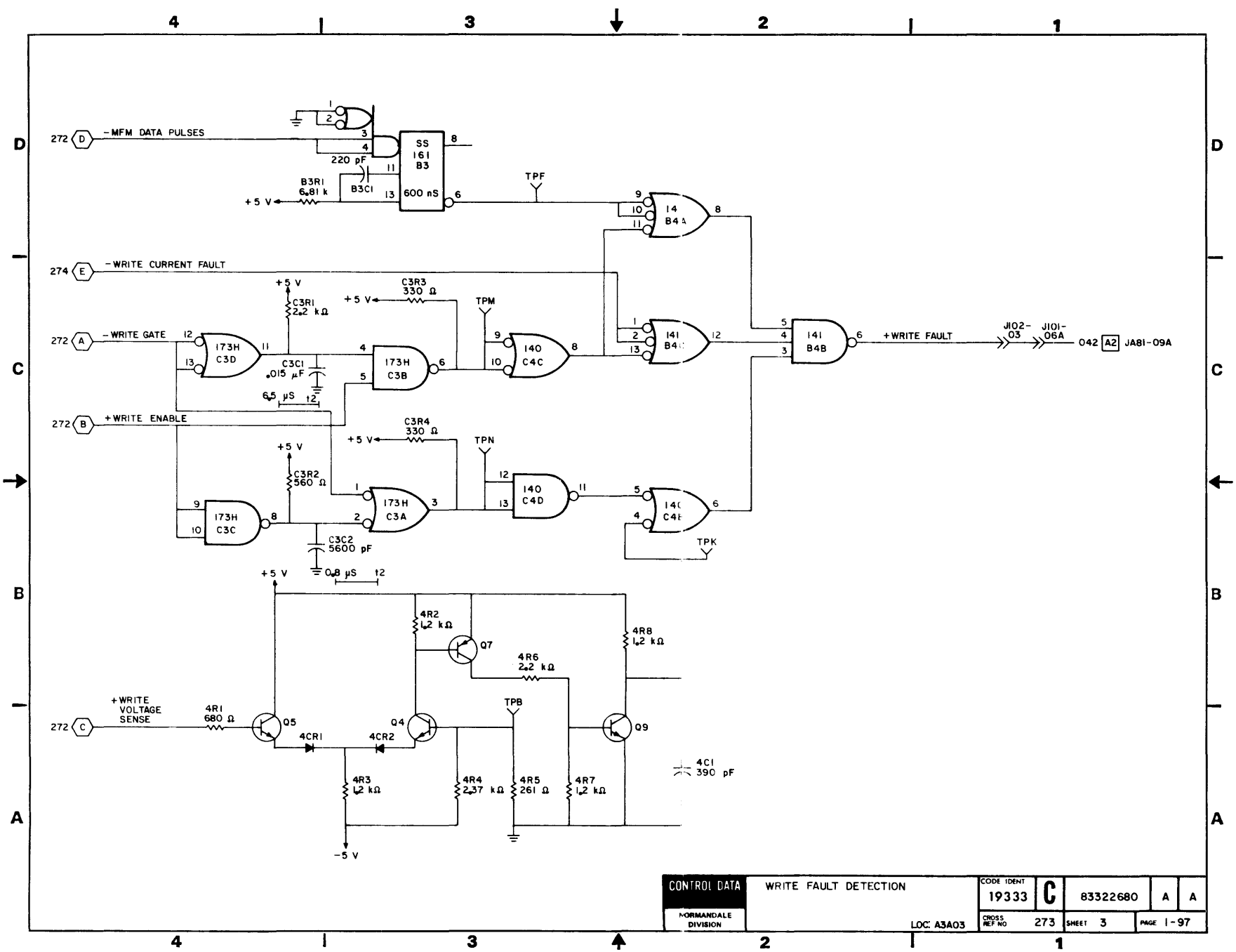

CONTROL DATA NORMANDALE DIVISION	WRITE FAULT DETECTION LOC: A3A03	CODE IDENT 19333	C	83322680	A A
		CROSS REF NO 273	SHEET 3	PAGE 1-97	

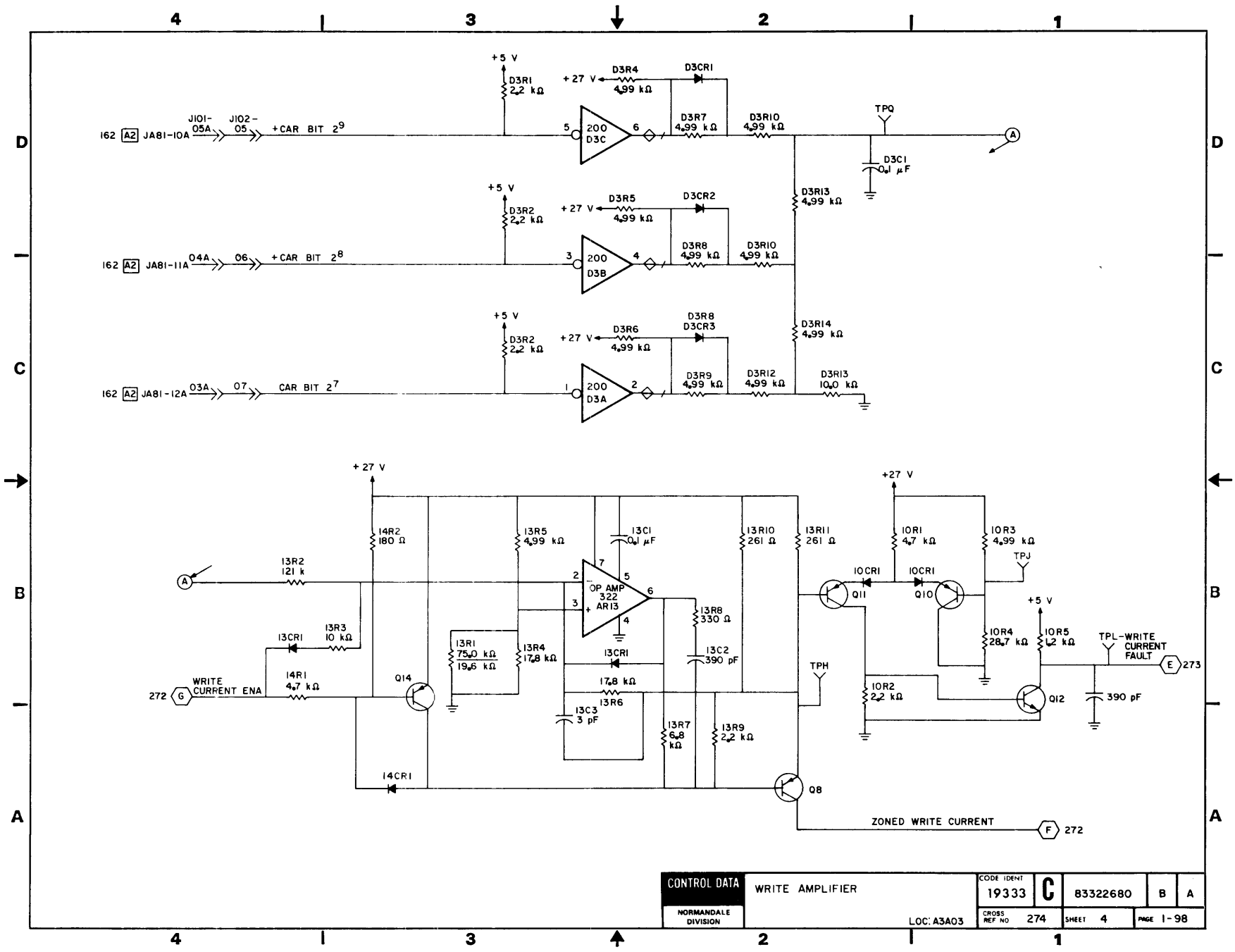

CONTROL DATA	WRITE AMPLIFIER	CODE IDENT 19333	C	83322680	B	A
NORMANDALE DIVISION	LOC: A3A03	CROSS REF NO 274		SHEET 4	PAGE 1-98	

REVISION STATUS OF SHEETS

1	2	3	4	5	6	7	8	9	10	11	12	13	14	15	16	17	18	19	20
A	A																		

REVISIONS

REV.	ECO.	DESCRIPTION	DRFT	DATE	CHK'D
A	PE23000	RELEASED			

DRAWN		CONTROL DATA	POWER AMPLIFIER DIAGRAMS	CODE IDENT 19333	C	83322680	A	A
CHECKED								
ENGINEER		NORMANDALE DIVISION	TYPE: 5VTN LOC: A3A04	CROSS REF NO 281		SHEET 1 OF 2	PAGE 1-99	
APPROVED								

REF 83214828

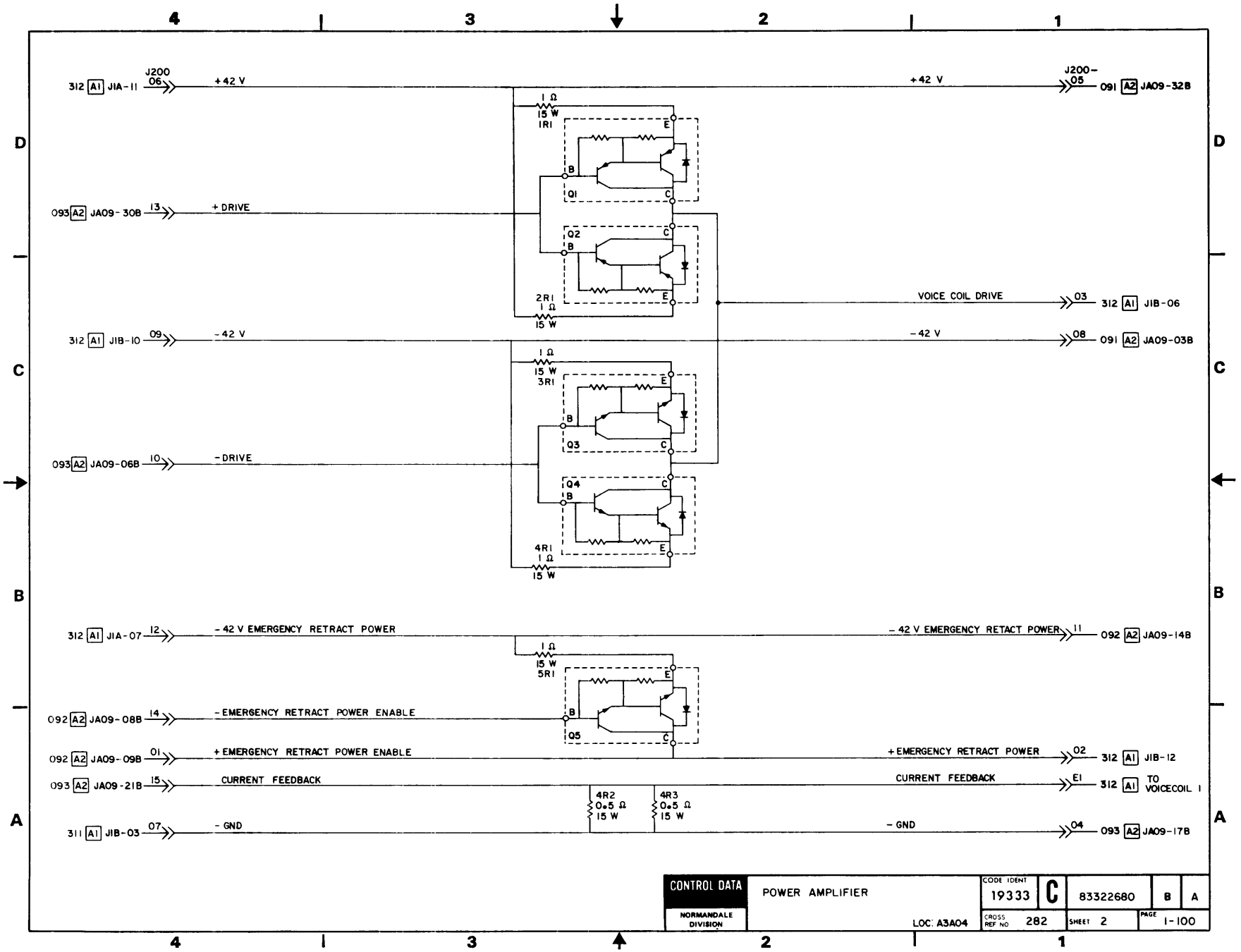
4
3
2
1
D
C
B
A
312 A1 J1A-11
J200 06
+42 V
1 Ω 15 W 1R1
Q1
Q2
2R1 1 Ω 15 W
+42 V
J200-05
091 A2 JA09-32B
093 A2 JA09-30B
13
+ DRIVE
VOICE COIL DRIVE
03
312 A1 J1B-06
312 A1 J1B-10
09
-42 V
-42 V
08
091 A2 JA09-03B
1 Ω 15 W 3R1
Q3
Q4
4R1 1 Ω 15 W
093 A2 JA09-06B
10
- DRIVE
312 A1 J1A-07
12
-42 V EMERGENCY RETRACT POWER
-42 V EMERGENCY RETACT POWER
11
092 A2 JA09-14B
1 Ω 15 W 5R1
Q5
092 A2 JA09-08B
14
- EMERGENCY RETRACT POWER ENABLE
092 A2 JA09-09B
01
+ EMERGENCY RETRACT POWER ENABLE
+ EMERGENCY RETRACT POWER
02
312 A1 J1B-12
093 A2 JA09-21B
15
CURRENT FEEDBACK
CURRENT FEEDBACK
E1
312 A1 TO VOICECOIL 1
4R2 0.5 Ω 15 W
4R3 0.5 Ω 15 W
311 A1 J1B-03
07
- GND
- GND
04
093 A2 JA09-17B
CONTROL DATA
NORMANDALE DIVISION
POWER AMPLIFIER
LOC: A3A04
CODE IDENT 19333
C
83322680
B
A
CROSS REF NO 282
SHEET 2
PAGE 1-100

REVISION STATUS OF SHEETS

1	2	3	4	5	6	7	8	9	10	11	12	13	14	15	16	17	18	19	20
A	A																		

REVISIONS

REV	ECO	DESCRIPTION	DRFT	DATE	CHK'D
A	PE23000	RELEASED			

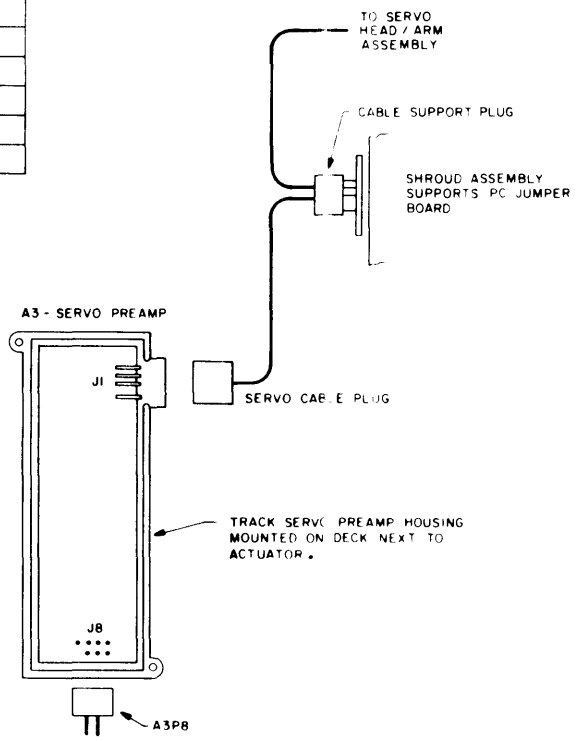

DRAWN	G. RABLIE	CONTROL DATA	TRACK SERVO PREAMP DIAGRAMS	CODE IDENT 19333	C	83322680	A A
CHECKED		NORMANDALE DIVISION					
ENGINEER			TYPE: FZQN LOC A3A05	CROSS REF NO 291		SHEET 1 of 2	PAGE 1-101
APPROVED							

REF 83215721

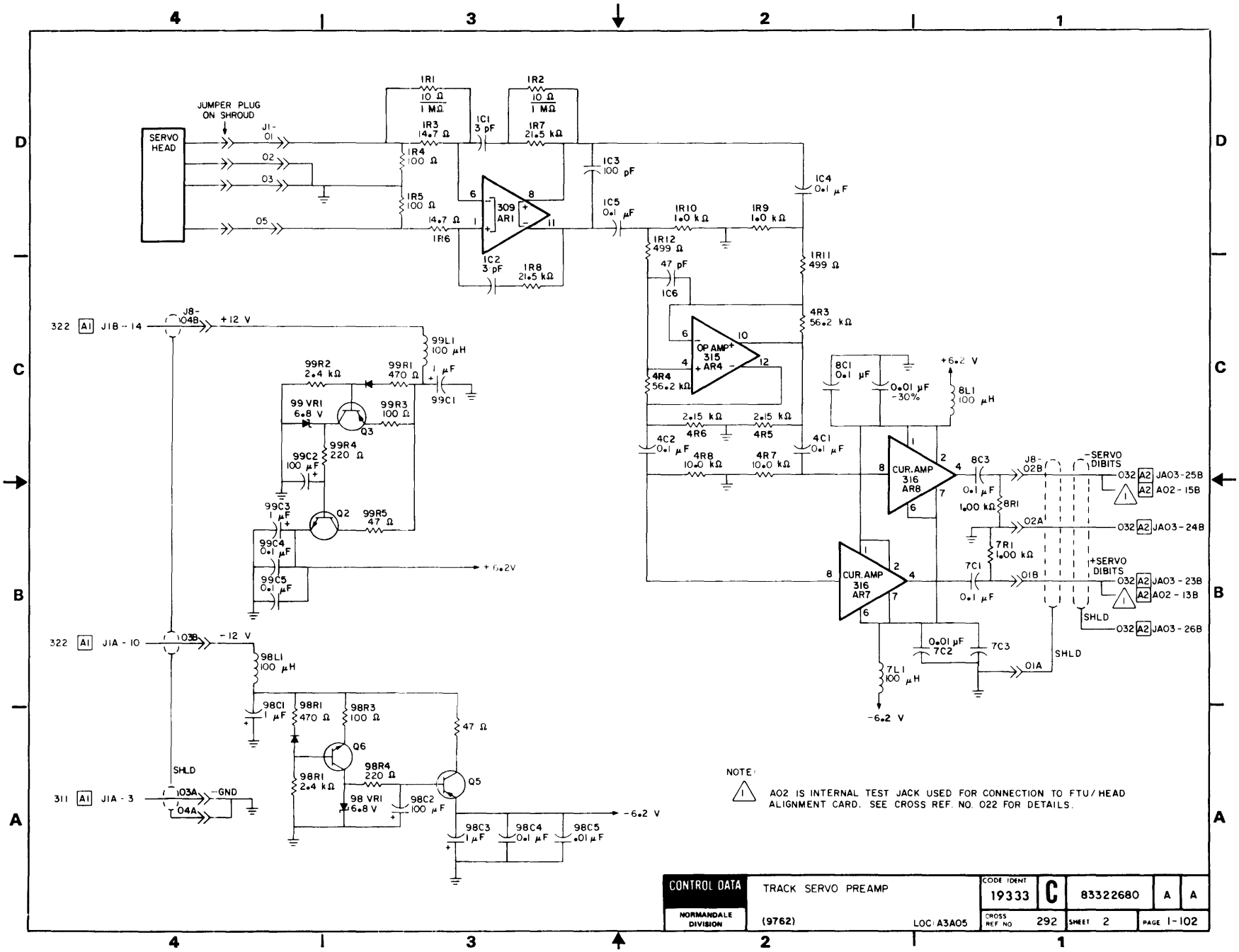
SERVO HEAD
JUMPER PLUG ON SHROUD
J1-01
02
03
05
1R1 10 Ω 1 MΩ
1R2 10 Ω 1 MΩ
1R3 14.7 Ω
1R4 100 Ω
1R5 100 Ω
1R6 14.7 Ω
1R7 21.5 kΩ
1R8 21.5 kΩ
1C1 3 pF
1C2 3 pF
1C3 100 pF
1C4 0.1 μF
1C5 0.1 μF
309 AR1
1R9 1.0 kΩ
1R10 1.0 kΩ
1R11 499 Ω
1R12 499 Ω
47 pF
1C6
4R3 56.2 kΩ
OP AMP 315 AR4
4R4 56.2 kΩ
2.15 kΩ 4R6
2.15 kΩ 4R5
4C2 0.1 μF
4C1 0.1 μF
4R8 10.0 kΩ
4R7 10.0 kΩ
8C1 0.1 μF
0.01 μF -30%
+6.2 V
8L1 100 μH
CUR. AMP 316 AR8
8C3 0.1 μF
1.00 kΩ 8R1
CUR. AMP 316 AR7
7C1 0.1 μF
7R1 1.00 kΩ
0.01 μF 7C2
7C3
7L1 100 μH
-6.2 V
SHLD
J8-02B
02A
01B
01A
-SERVO DIBITS
+SERVO DIBITS
032 A2 JA03-25B
A2 A02-15B
032 A2 JA03-24B
032 A2 JA03-23B
A2 A02-13B
032 A2 JA03-26B
322 A1 J1B-14
J8-104B
+12 V
99L1 100 μH
99R2 2.4 kΩ
99R1 470 Ω
1 μF 99C1
99 VR1 6.8 V
99R3 100 Ω
Q3
99R4 220 Ω
99C2 100 μF
99C3 1 μF
Q2
99R5 47 Ω
99C4 0.1 μF
99C5 0.1 μF
+6.2V
322 A1 J1A-10
103B
-12 V
98L1 100 μH
98C1 1 μF
98R1 470 Ω
98R3 100 Ω
47 Ω
Q6
98R4 220 Ω
Q5
311 A1 J1A-3
SHLD
103A
-GND
104A
98R1 2.4 kΩ
98 VR1 6.8 V
98C2 100 μF
-6.2 V
98C3 1 μF
98C4 0.1 μF
98C5 .01 μF
NOTE:
1
A02 IS INTERNAL TEST JACK USED FOR CONNECTION TO FTU/HEAD ALIGNMENT CARD. SEE CROSS REF. NO. 022 FOR DETAILS.
CONTROL DATA
NORMANDALE DIVISION
TRACK SERVO PREAMP
(9762)
LOC: A3A05
CODE IDENT 19333
C
83322680
A
A
CROSS REF NO 292
SHEET 2
PAGE 1-102

REVISION STATUS OF SHEETS

1	2	3	4	5	6	7	8	9	10	11	12	13	14	15	16	17	18	19	20
A	A																		

REVISIONS

REV.	ECO.	DESCRIPTION	DRFT.	DATE	CHK'D
A	PE23000	RELEASED			

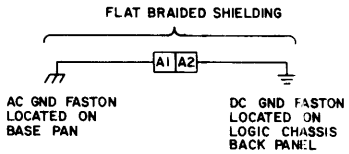

DRAWN		CONTROL DATA	AC POWER SYSTEM DIAGRAMS	CODE IDENT 19333	C	83322680	A A
CHECKED							
ENGINEER		NORMANDALE DIVISION	LOC: A1	CROSS REF NO 301		SHEET 1 OF 2	PAGE 1-103
APPROVED							

REF 83215724

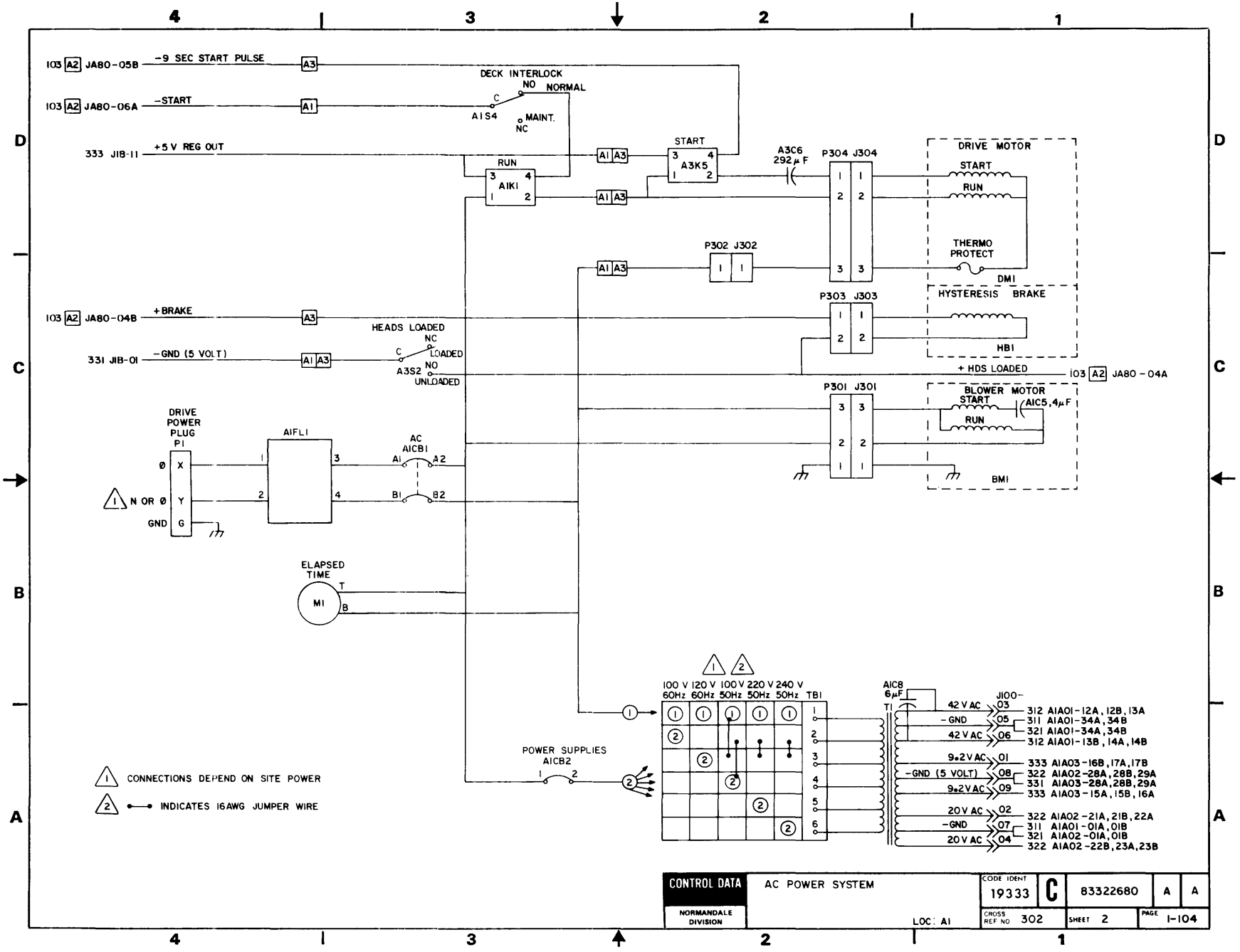
103 A2 JA80-05B
-9 SEC START PULSE
A3
DECK INTERLOCK
NO
NORMAL
103 A2 JA80-06A
-START
A1
C
A1S4
MAINT.
NC
333 J1B-11
+5 V REG OUT
START
A3K5
A3C6
292 μF
P304 J304
DRIVE MOTOR
START
RUN
RUN
A1K1
P302 J302
THERMO
PROTECT
DMI
P303 J303
HYSTERESIS BRAKE
103 A2 JA80-04B
+BRAKE
HBI
HEADS LOADED
NC
LOADED
331 J1B-01
-GND (5 VOLT)
A3S2
NO
UNLOADED
+ HDS LOADED
103 A2 JA80-04A
P301 J301
BLOWER MOTOR
START
AIC5,4μF
RUN
BMI
DRIVE
POWER
PLUG
P1
AIFL1
AC
A1CB1
Ø
X
N OR Ø
Y
GND
G
ELAPSED
TIME
M1
T
B
100 V 60Hz
120 V 60Hz
100 V 50Hz
220 V 50Hz
240 V 50Hz
TB1
POWER SUPPLIES
A1CB2
AIC8
6μF
T1
J100-
42 V AC
-GND
42 V AC
9.2 V AC
-GND (5 VOLT)
9.2 V AC
20 V AC
-GND
20 V AC
312 A1A01-12A, 12B, 13A
311 A1A01-34A, 34B
321 A1A01-34A, 34B
312 A1A01-13B, 14A, 14B
333 A1A03-16B, 17A, 17B
322 A1A02-28A, 28B, 29A
331 A1A03-28A, 28B, 29A
333 A1A03-15A, 15B, 16A
322 A1A02-21A, 21B, 22A
311 A1A01-01A, 01B
321 A1A02-01A, 01B
322 A1A02-22B, 23A, 23B
CONNECTIONS DEPEND ON SITE POWER
INDICATES 16AWG JUMPER WIRE
CONTROL DATA
NORMANDALE DIVISION
AC POWER SYSTEM
LOC: A1
CODE IDENT 19333
C
83322680
A
A
CROSS REF NO 302
SHEET 2
PAGE 1-104

REVISION STATUS OF SHEETS																			
1	2	3	4	5	6	7	8	9	10	11	12	13	14	15	16	17	18	19	20
A	A																		

REVISIONS					
REV.	ECO.	DESCRIPTION	DRFT.	DATE	CHK'D
A	PE23000	RELEASED			

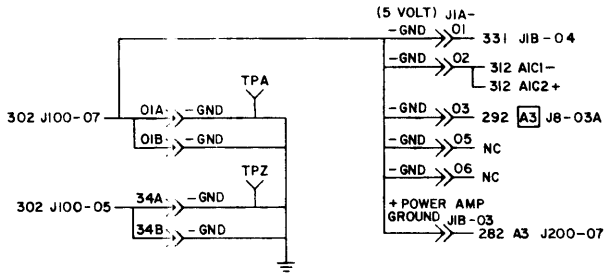

DRAWN M. Anderson	CONTROL DATA NORMANDALE DIVISION	±42V POWER SUPPLY AND EMERGENCY RETRACT DIAGRAMS	CODE IDENT 19333	C	83322680	A	A
CHECKED		TYPE: 5SJV LOC: A1A01	CROSS REF NO 311		SHEET 1 OF 2	PAGE 1 105	
ENGINEER							
APPROVED							

REF 8321483

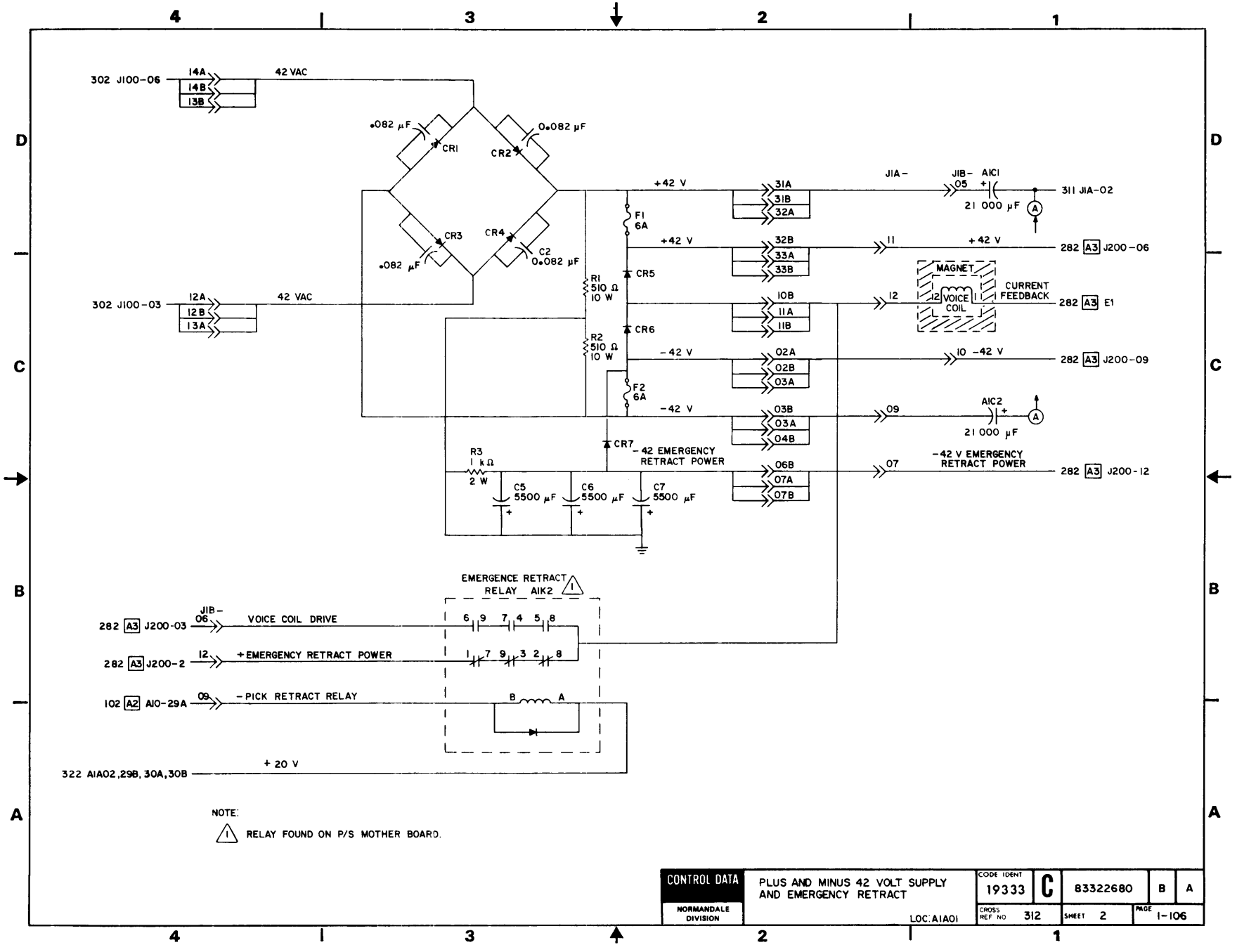

CONTROL DATA	PLUS AND MINUS 42 VOLT SUPPLY AND EMERGENCY RETRACT	CODE IDENT 19333	C	83322680	B	A
NORMANDALE DIVISION	LOC: A1A01	CROSS REF NO 312		SHEET 2	PAGE 1-106	

REVISION STATUS OF SHEETS																			
1	2	3	4	5	6	7	8	9	10	11	12	13	14	15	16	17	18	19	20
A	A																		

REVISIONS					
REV	ECO	DESCRIPTION	DRFT	DATE	CHK'D
A	DE23000	RELEASED			

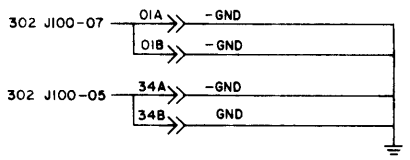

DRAWN		1/77	CONTROL DATA	PLUS AND MINUS 12V AND PLUS AND MINUS 20V DIAGRAMS	CODE IDENT 19333	C	83322680	A	A
CHECKED									
ENGINEER			NORMANDALE DIVISION	TYPE 5SKV LOC A1A02	CROSS REF NO 321	SHEET 1 OF 2	PAGE 1-107		
APPROVED							

REF 83214832

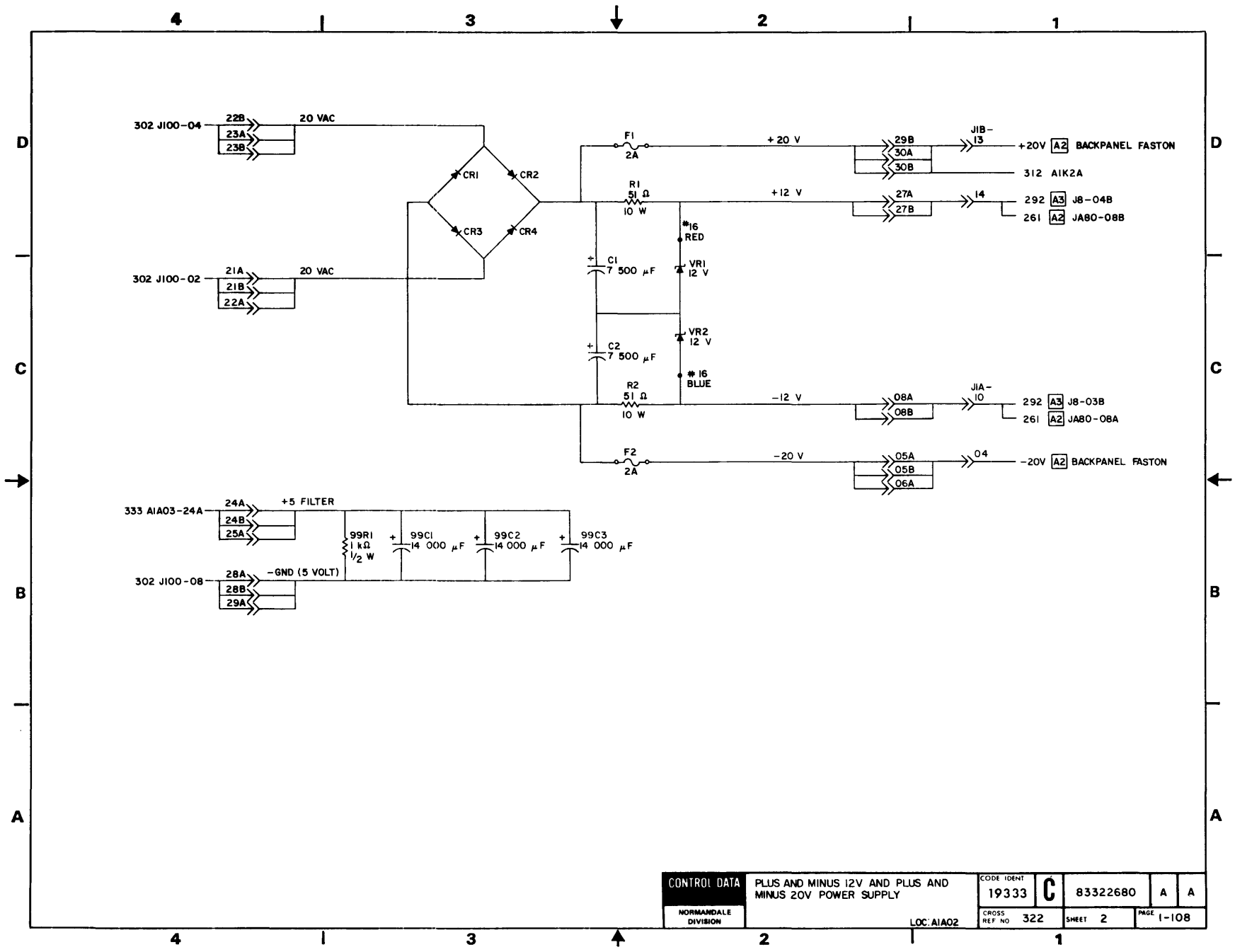

CONTROL DATA	PLUS AND MINUS 12V AND PLUS AND MINUS 20V POWER SUPPLY	CODE IDENT 19333	C	83322680	A A
NORMANDALE DIVISION	LOC: A1A02	CROSS REF NO 322		SHEET 2	PAGE 1-108

REVISION STATUS OF SHEETS

1	2	3	4	5	6	7	8	9	10	11	12	13	14	15	16	17	18	19	20
A	A	A																	
B	A	A																	
C	A	C																	

REVISIONS

REV.	ECO.	DESCRIPTION	DRFT.	DATE	CHK'D
A	PE23000	RELEASE			
B	PE55099	CHG FUSE ON CARD	GR	4-6-78	
C		TECHNICAL CORRECTION	A.A.O	8-25-78	

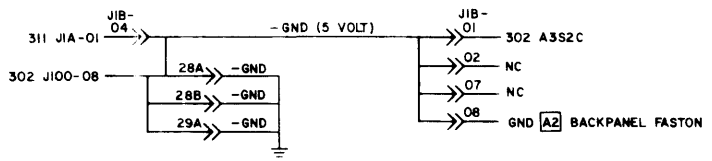

DRAWN	M Anderson 2-4-77	CONTROL DATA NORMANDALE DIVISION	PLUS AND MINUS 5V POWER SUPPLY DIAGRAMS	CODE IDENT 19333	C	83322680	E C
CHECKED				CROSS REF NO 331		SHEET 1 of 3	PAGE 1-109
ENGINEER	[illegible] 2/27/78		TYPE: BSHV LOC: A1A03				
APPROVED							

REF 83214883

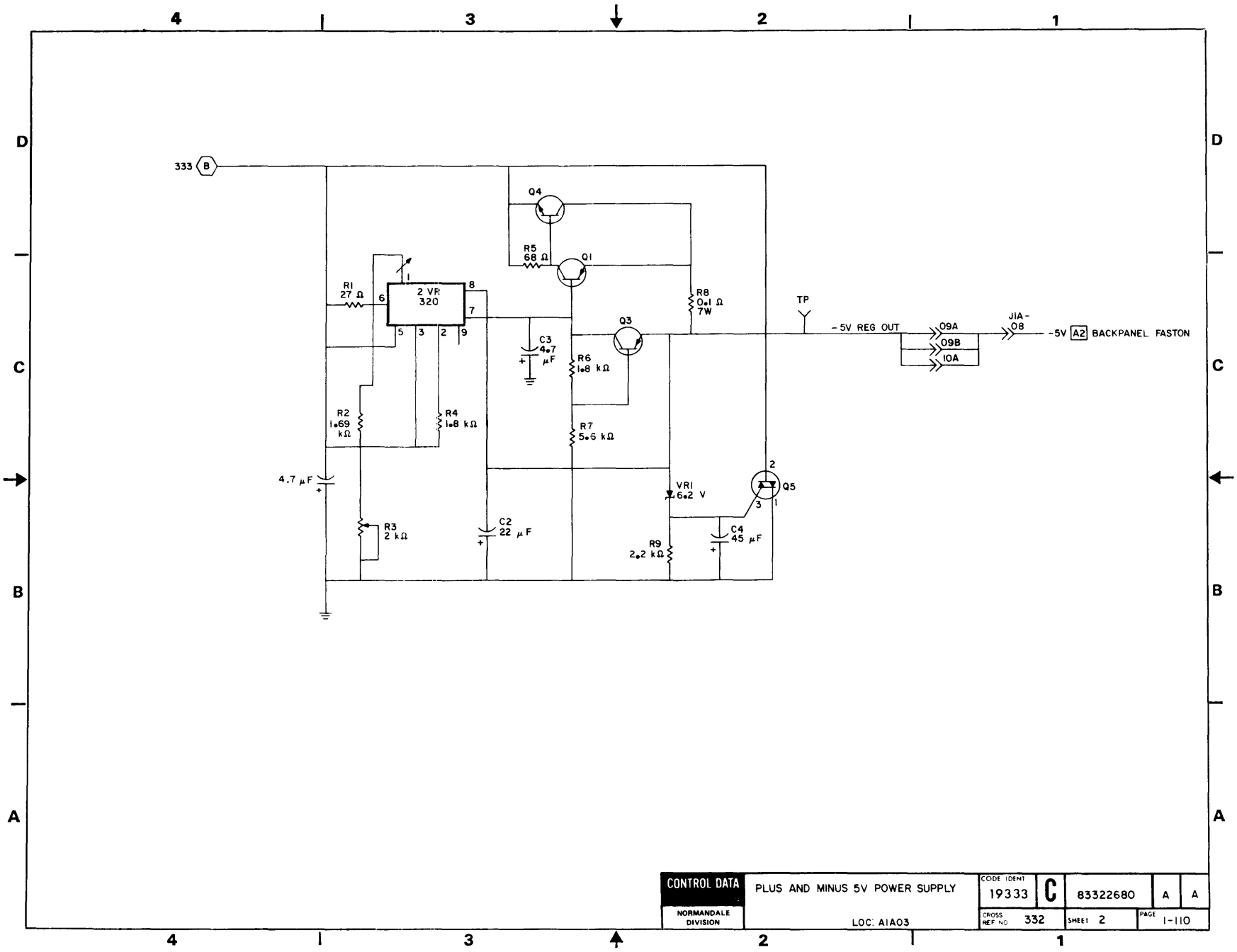

CONTROL DATA NORMANDALE DIVISION	PLUS AND MINUS 5V POWER SUPPLY LOC: A1A03	CODE IDENT 19333	C	83322680	A	A
		CROSS REF NO 332		SHEET 2	PAGE 1-110	

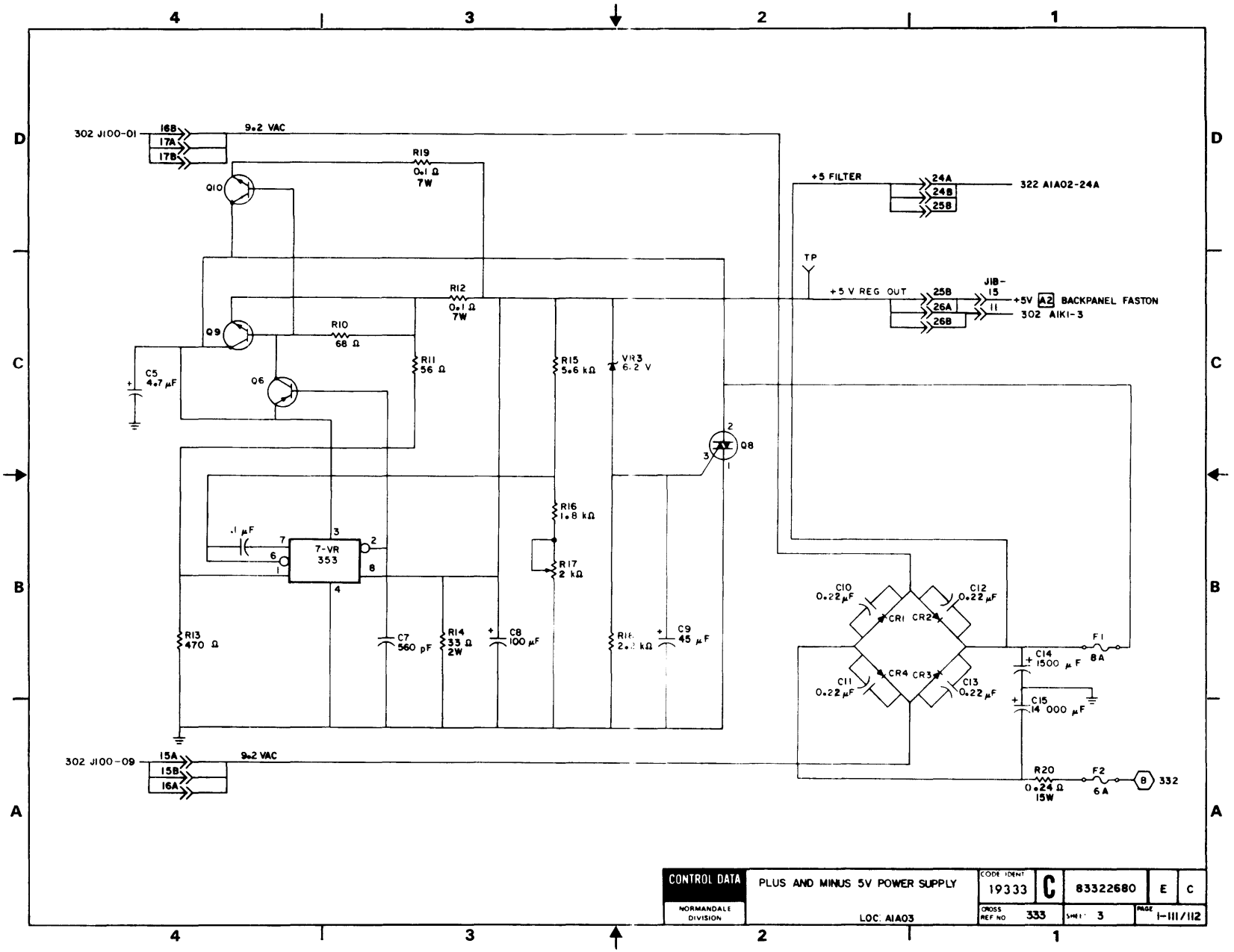

CONTROL DATA	PLUS AND MINUS 5V POWER SUPPLY	CODE IDENT 19333	C	83322680	E	C
NORMANDALE DIVISION	LOC: A1A03	CROSS REF NO 333		SHEET 3	PAGE 1-111/112	

REVISION STATUS OF SHEETS																			
1	2	3	4	5	6	7	8	9	10	11	12	13	14	15	16	17	18	19	20
A	A	A	A																

REVISIONS					
REV	ECO.	DESCRIPTION	DRFT.	DATE	CHK'D
A	PE 23000	RELEASED			

NOTE:
1 ALL OF W1 HARNESS ASSY AND W11 & W12 CABLE ASSYS ARE SHOWN ON CROSS REF 302 AND NOT REPEATED ON THIS DIAGRAM SET.

DRAWN		CONTROL DATA	HARNESS DIAGRAMS	CODE IDENT 19333	C	83322680	A A
CHECKED			W2, W3, W4				
ENGINEER		NORMANDALE DIVISION		CROSS REF NO 341		SHEET 1 OF 4	PAGE 1-113
APPROVED							

REF 83215722

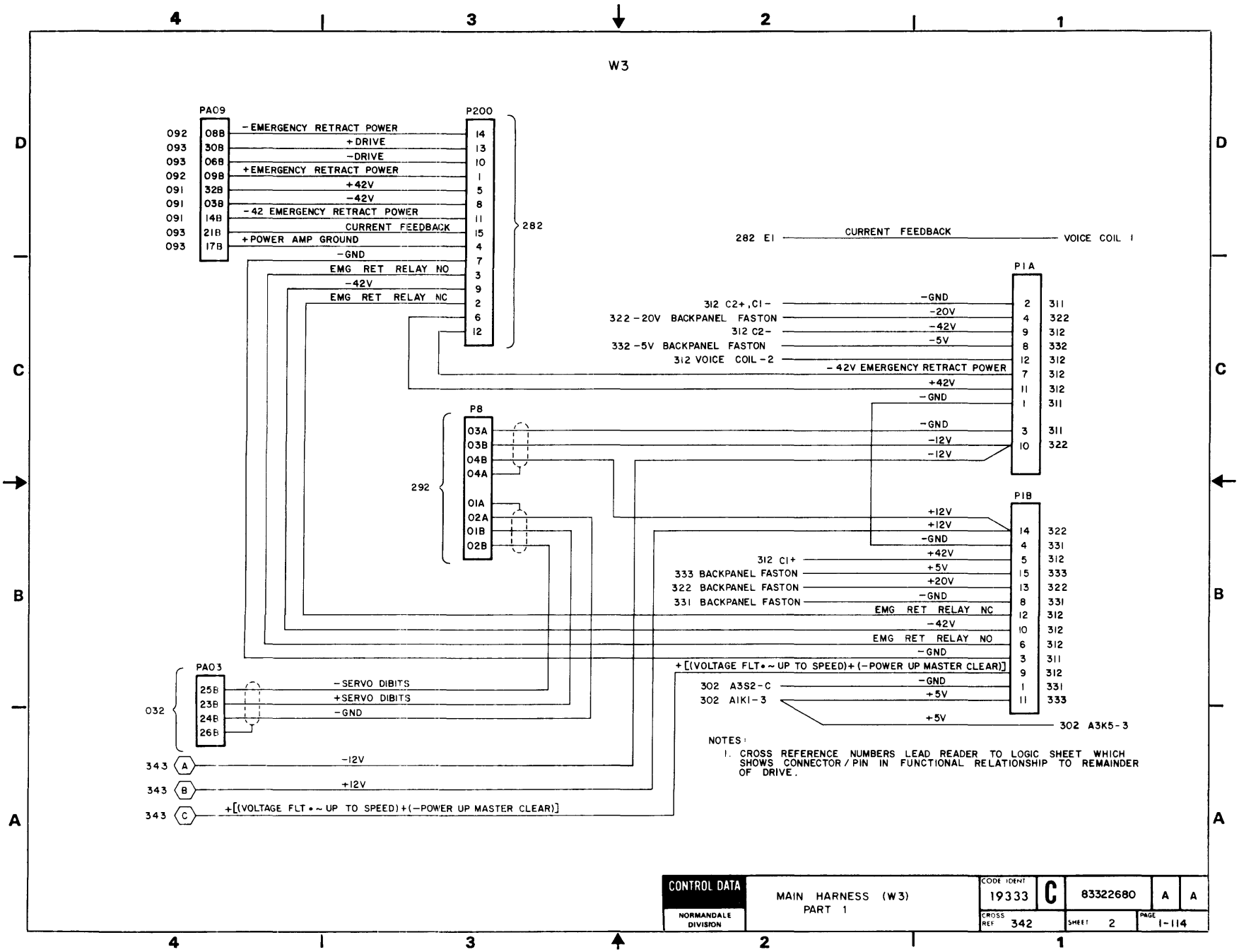
W3
PA09
P200
092 08B -EMERGENCY RETRACT POWER 14
093 30B +DRIVE 13
093 06B -DRIVE 10
092 09B +EMERGENCY RETRACT POWER 1
091 32B +42V 5
091 03B -42V 8
091 14B -42 EMERGENCY RETRACT POWER 11
093 21B CURRENT FEEDBACK 15
093 17B +POWER AMP GROUND 4
-GND 7
EMG RET RELAY NO 3
-42V 9
EMG RET RELAY NC 2
6
12
282
282 E1 CURRENT FEEDBACK VOICE COIL 1
P1A
312 C2+,C1- -GND 2 311
322 -20V BACKPANEL FASTON -20V 4 322
312 C2- -42V 9 312
332 -5V BACKPANEL FASTON -5V 8 332
312 VOICE COIL-2 12 312
-42V EMERGENCY RETRACT POWER 7 312
+42V 11 312
-GND 1 311
P8
03A -GND 3 311
03B -12V 10 322
04B -12V
04A
292
01A +12V
02A +12V
01B -GND
02B
P1B
+42V 14 322
312 C1+ +5V 4 331
333 BACKPANEL FASTON +20V 5 312
322 BACKPANEL FASTON -GND 15 333
331 BACKPANEL FASTON EMG RET RELAY NC 13 322
-42V 8 331
EMG RET RELAY NO 12 312
-GND 10 312
+[(VOLTAGE FLT • ~ UP TO SPEED)+(-POWER UP MASTER CLEAR)] 6 312
302 A3S2-C -GND 3 311
302 A1K1-3 +5V 1 331
+5V 11 333
302 A3K5-3
PA03
032
25B -SERVO DIBITS
23B +SERVO DIBITS
24B -GND
26B
343 A -12V
343 B +12V
343 C +[(VOLTAGE FLT • ~ UP TO SPEED)+(-POWER UP MASTER CLEAR)]
NOTES:
1. CROSS REFERENCE NUMBERS LEAD READER TO LOGIC SHEET WHICH SHOWS CONNECTOR/PIN IN FUNCTIONAL RELATIONSHIP TO REMAINDER OF DRIVE.
CONTROL DATA
NORMANDALE DIVISION
MAIN HARNESS (W3)
PART 1
CODE IDENT 19333
C
83322680
A
A
CROSS REF 342
SHEET 2
PAGE 1-114

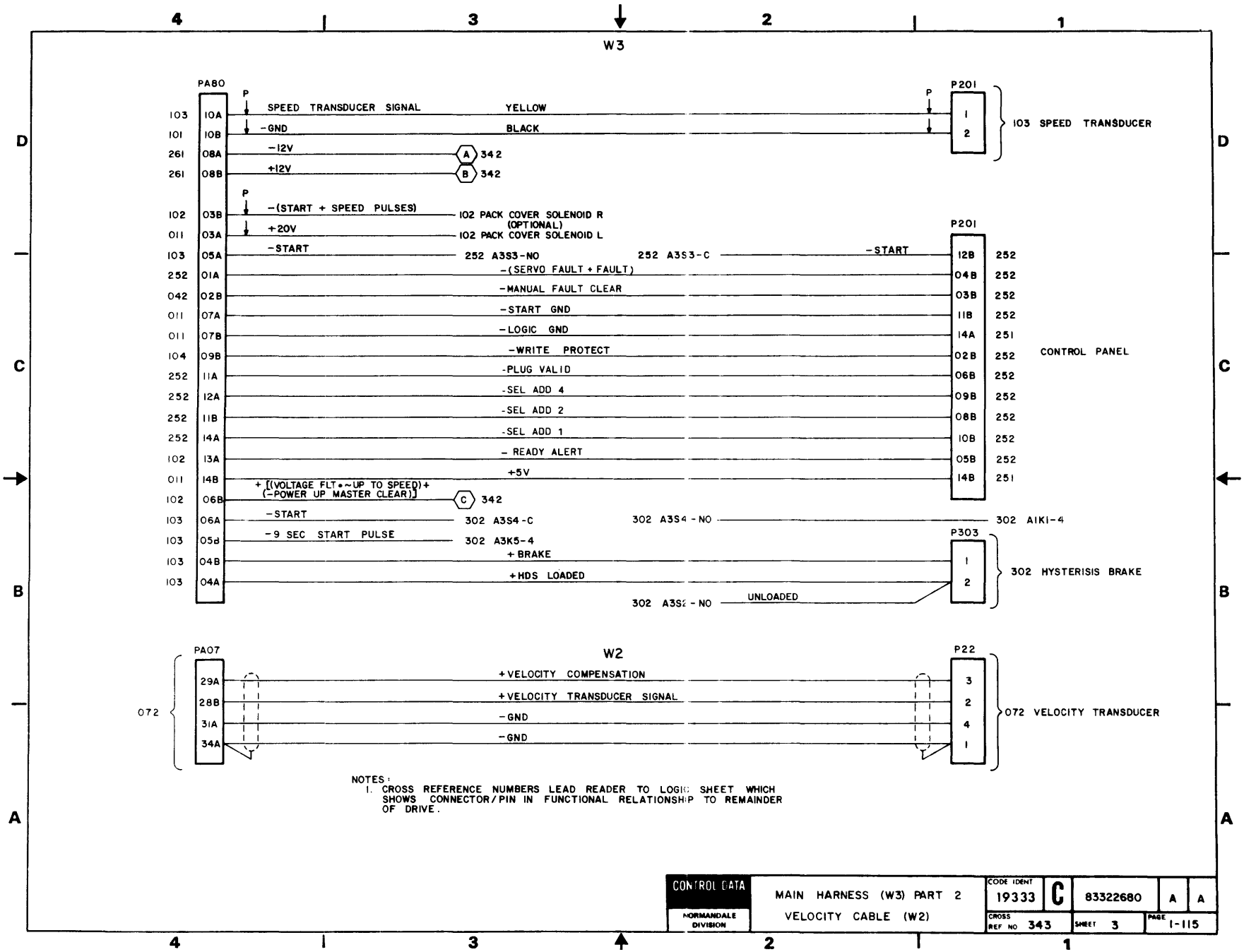

NOTES:
1. CROSS REFERENCE NUMBERS LEAD READER TO LOGIC SHEET WHICH SHOWS CONNECTOR/PIN IN FUNCTIONAL RELATIONSHIP TO REMAINDER OF DRIVE.

CONTROL DATA NORMANDALE DIVISION	MAIN HARNESS (W3) PART 2 VELOCITY CABLE (W2)	CODE IDENT 19333	C	83322680	A	A
		CROSS REF NO 343		SHEET 3	PAGE 1-115	

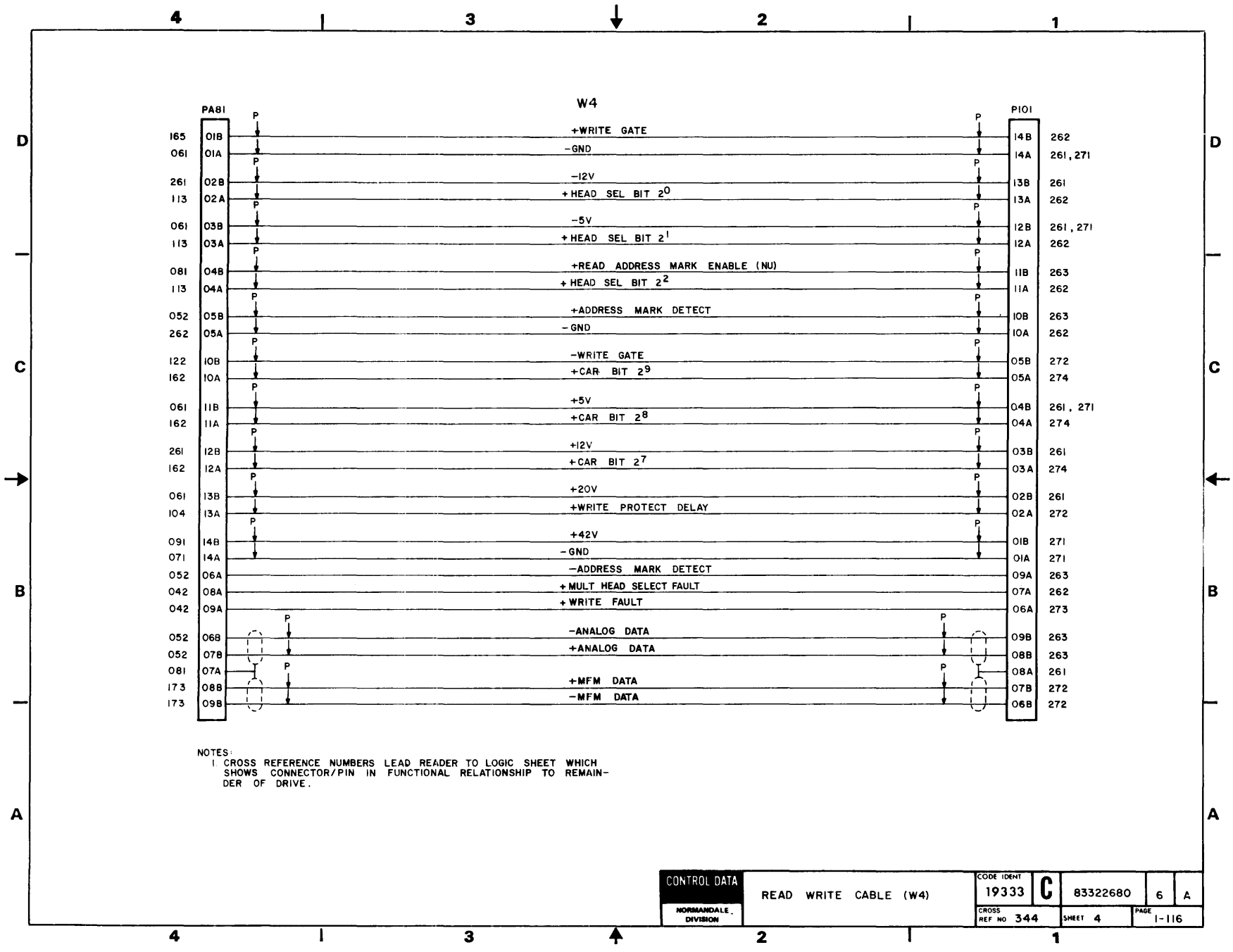

NOTES:
1. CROSS REFERENCE NUMBERS LEAD READER TO LOGIC SHEET WHICH SHOWS CONNECTOR/PIN IN FUNCTIONAL RELATIONSHIP TO REMAINDER OF DRIVE.

CONTROL DATA NORMANDALE DIVISION	READ WRITE CABLE (W4)	CODE IDENT 19333	C	83322680	6	A
		CROSS REF NO 344		SHEET 4	PAGE 1-116	

SECTION 2

WIRE LISTS

INTRODUCTION

Section 2 contains the wiring for the backpanels. The first part of section 2 explains how to use the list and identifies the columns shown on the lists. Only the wiring for the backpanel is shown on the wire lists. All other wiring is shown on the cabling diagrams.

READING WIRE LISTS

Wire lists show the origin, destination, and Z level of all wirewrap connections on the logic chassis backpanel. The wires are listed in order of card location and pin number. The lowest numbered card location and pin number are listed first and the highest numbered card location and pin number are listed last. The wire list is a double ended list. This means that all wires will be listed twice: first as the origin, then as the destination. Following is an explanation of all the columns used on the wire list (refer to figure 2-1).

SIGNAL NAME OR NUMBER IDENTIFICATION

The signal name or number identification column is the first column on the wire list. The number shown in this column is for factory use only.

ORIGIN/DESTINATION

The origin column identifies the card location and pin number on which the wire begins. The destination column identifies the opposite end of the wire. Both columns contain a six character number that identifies the exact location of the wire. The first three characters represent the card location. The second three characters represent the pin number on which the wire is attached. Following is a typical example of the number that appears in the Origin/Destination column.

Example:

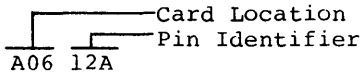

TITLE: WIREWRAP LIST	WL	DOCUMENT NO.: LOGIC W/W	SHEET NO.: 1 of 12	REV.: A

SIGNAL NAME OR NUMBER IDENTIFICATION	ORIGIN	DESTINATION	Z LEVEL	NOTES
102111	A0101B	A0102A	1	
102111	A0102A	A0101B	1	
100108	A0102B	A1708A	1	
100211	A0103A	A0231A	1	
100206	A0230A	A1712A	1	
100205	A0230B	A0612B	1	
100203	A0231A	A1326B	2	
100211	A0231A	A0103A	1	

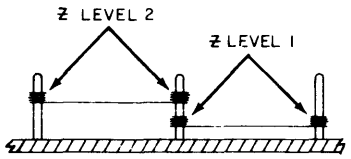

9E82

Figure 2-1. Example of Logic Wirewrap List

Z LEVEL

The Z level refers to the position of the wire located on the pin. There are two Z levels on all pins (refer to figure 2-2). Z level 1 identifies the wirewrap connection closer to the surface of the wirewrap panel. Z level 2 identifies the wirewrap connection farthest from the surface of the wirewrap panel. All pins may contain two wires. However, if the pin contains only one wire, that wire will be connected on Z level 1. The same Z level is maintained at both ends of all wirewrap connections.

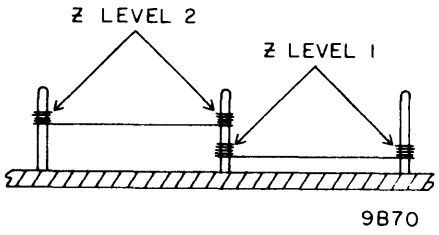

Figure 2-2. Z Levels

NOTES

The notes column is the last column on the wire list. Signal names, history, or other pertinent information is shown in the notes column.

TITLE	WL	DOCUMENT NO.	SHEET NO.	REV.
Logic Wirewrap		77568131	1 of 15	AC

SIGNAL NAME OR NUMBER IDENTIFICATION	ORIGIN	DESTINATION	Z LEVEL	NOTES
100416	A0101A	JA8007A	1	
100416	A0101A	JA8007B	2	
300023	A0101B	A0121B	1	
100305	A0104B	A0333A	1	
100101	A0112B	A0221A	1	
100101	A0112B	A0127B	2	
100105	A0113B	B0831A	1	
300022	A0114B	A0234B	1	
300023	A0121B	A0101B	1	
100304	A0122B	A0312B	1	
100103	A0123B	A0623B	1	
100102	A0124B	A0624B	1	
100104	A0126B	B0815A	1	
100101	A0127B	A0112B	2	
100107	A0130B	B0709A	1	
101020	A0133B	JA8003A	1	
100417	A0134B	JA8014B	1	
100309	A0213B	A0323B	1	
100409	A0214B	B0103A	2	
100409	A0214B	A1012B	2	
100308	A0215B	A0325B	1	
300024	A0216B	A0231A	2	
200621	A0217A	B0633B	1	
100101	A0221A	B0123B	2	
100101	A0221A	A0112B	1	
300024	A0222B	A0234A	2	
200221	A0223A	B0117B	1	
200217	A0223B	B0203A	1	
200217	A0223B	H0625A	2	
200208	A0224A	B0224B	2	
200218	A0224B	B0232B	1	
200206	A0225A	B0122B	1	
200204	A0225B	B0116A	1	
200216	A0226A	B0225A	2	
200202	A0226B	B0631A	1	
200214	A0227A	B0226A	2	
200210	A0228A	B0226B	2	
100406	A0228B	A0426B	2	
200212	A0229A	B0225B	2	
200915	A0230B	B0107B	1	
300024	A0231A	A0234A	1	
300024	A0231A	A0216B	2	
200220	A0232A	B0232A	2	
300024	A0234A	A0231A	1	
300024	A0234A	A0222B	2	
300022	A0234B	A0114B	1	
100301	A0307B	B0928B	1	
100302	A0308B	B0927B	1	
100303	A0309B	A0826B	1	
100307	A0311B	B0804A	1	
100304	A0312B	A0122B	1	

TITLE	WL	DOCUMENT NO.	SHEET NO.	REV.
Logic Wirewrap		77568131	2	AC

SIGNAL NAME OR NUMBER IDENTIFICATION	ORIGIN	DESTINATION	Z LEVEL	NOTES
100309	A0323B	A0213B	1	
100308	A0325B	A0215B	1	
200926	A0327B	B0913B	2	
100306	A0332A	B0805B	1	
100305	A0333A	A0104B	1	
100305	A0333A	B0822B	2	
100418	A0403B	A0903B	1	
200802	A0405A	B0104A	2	
100403	A0407A	A1015B	2	
100403	A0407A	A0528B	1	
300007	A0408A	A0409B	2	
100401	A0408B	B0107A	1	
100410	A0409A	JA8002B	1	
300007	A0409B	A0408A	2	
300007	A0409B	JA8109A	1	
200904	A0410A	B0903B	1	
200222	A0410B	B0202B	2	
100404	A0411B	A0707A	1	
100404	A0411B	JA8001A	2	
200209	A0412A	B0230A	1	
100405	A0412B	A1027B	2	
100405	A0412B	JA8013A	1	
200201	A0413A	JA8110B	1	
200201	A0413A	B0227B	2	
200203	A0413B	A0531B	2	
200203	A0413B	B0229A	1	
100402	A0414A	B0931B	1	
300001	A0414B	JA8108A	1	
200914	A0415A	JA8005A	2	
100407	A0415B	A1023B	1	
200914	A0416A	A0428B	1	
101010	A0416B	A1021A	1	
100414	A0417A	JA8011B	1	
100413	A0417B	JA8012A	1	
100419	A0421A	JA8226A	1	
100420	A0421B	JA8226B	1	
100415	A0422B	JA8014A	1	
100421	A0423A	JA8222A	1	
100422	A0423B	JA8222B	1	
200814	A0424A	B0809A	1	
101002	A0424B	A1021B	1	
200919	A0425B	B0817B	2	
300025	A0426A	A1013A	2	
100406	A0426B	B0124B	1	
100406	A0426B	A0228B	2	
100423	A0427A	JA8241A	1	
100424	A0427B	JA8241B	1	
100412	A0428A	JA8011A	1	
200914	A0428B	A0416A	1	
100425	A0429A	JA8223A	1	
100426	A0429B	JA8223B	1	
100427	A0430A	JA8224A	1	

TITLE	WL	DOCUMENT NO.	SHEET NO.	REV.
Logic Wirewrap		77568131	3	AC

SIGNAL NAME OR NUMBER IDENTIFICATION	ORIGIN	DESTINATION	Z LEVEL	NOTES
100428	A0430B	JA8224B	1	
100429	A0431A	JA8242A	1	
100430	A0431B	JA8242B	1	
100432	A0432A	JA8228A	1	
100417	A0432B	A0932B	1	
100432	A0433A	JA8228B	1	
200222	A0501A	A0524B	1	
100502	A0503B	A0610B	1	
100501	A0504B	A0609B	1	
300003	A0507B	JA8107B	1	
300002	A0508B	JA8106B	1	
300004	A0521B	JA8105B	1	
300005	A0522B	JA8106A	1	
200222	A0524B	A0501A	1	
200211	A0527B	B0121B	1	
100403	A0528B	A0407A	1	
100503	A0530B	A0622B	1	
200203	A0531B	A0612B	1	
200203	A0531B	A0413B	2	
300013	A0601A	JA8101A	1	
300019	A0601B	JA8103B	1	
200219	A0603B	B0233A	1	
200215	A0604B	B0231B	1	
100501	A0609B	A0504B	1	
100502	A0610B	A0503B	1	
200203	A0612B	A0531B	1	
100503	A0622B	A0530B	1	
100103	A0623B	A0123B	1	
100102	A0624B	A0124B	1	
200325	A0626B	B0131B	1	
100601	A0627B	B0131A	1	
300021	A0633B	JA8113B	1	
300020	A0634B	JA8111B	1	
300014	A0701A	JA8114A	1	
200918	A0702A	B0931A	1	
100404	A0707A	A0411B	1	
100404	A0707A	B0933B	2	
200922	A0707B	B0929B	1	
200923	A0708A	B0912B	1	
200911	A0710A	B0913A	1	
200610	A0711B	B0602A	1	
200612	A0712B	B0603A	1	
200613	A0713A	B0604A	1	
200616	A0713B	B0610A	1	
200617	A0715A	B0609B	1	
100809	A0715B	A0826A	2	
200619	A0716A	B0611B	1	
200902	A0716B	A0923B	2	
200618	A0717A	B0609A	1	
200907	A0717B	B0916A	1	
200901	A0721B	A0922B	2	
200905	A0722B	B0916B	1	

TITLE	WL	DOCUMENT NO.	SHEET NO.	REV.
Logic Wirewrap		77568131	4	AC

SIGNAL NAME OR NUMBER IDENTIFICATION	ORIGIN	DESTINATION	Z LEVEL	NOTES
100808	A0723B	A0809A	1	
200611	A0725B	B0602B	1	
100701	A0726B	A0928B	1	
200608	A0727A	B0604B	1	
100703	A0727B	A0808B	1	
100902	A0728B	A0912B	1	
100702	A0730B	A0802A	1	
300015	A0801A	JA8107A	1	
100702	A0802A	A0730B	1	
100801	A0808A	B0816A	1	
100703	A0808B	A0727B	1	
100808	A0809A	A0723B	1	
100802	A0809B	B0810A	1	
200924	A0810B	B0906B	2	
200924	A0810B	B0117A	1	
100804	A0811A	A0824B	2	
300804	A0811B	B0230B	2	
200908	A0812A	B0914A	2	
100807	A0812B	B0905A	1	
200910	A0813A	B0922A	1	
200913	A0813B	B0930A	1	
200804	A0814B	B0810B	1	
200903	A0816A	B0904B	1	
200207	A0821A	B0229B	1	
100806	A0822A	A0927A	1	
200205	A0822B	B0228B	1	
100805	A0823A	B0828B	1	
200906	A0823B	B0906A	1	
200211	A0824A	B0614B	1	
100804	A0824B	A0811A	2	
100803	A0825A	B0927A	1	
200925	A0825B	B0926A	1	
100809	A0826A	A0906A	1	
100809	A0826A	A0715B	2	
100303	A0826B	A0309B	1	
200912	A0832A	B0903A	2	
100901	A0833A	A0924B	1	
101011	A0902A	A1002B	2	
101011	A0902B	A1002B	1	
100418	A0903A	A0903B	2	
100418	A0903A	A0904A	1	
100418	A0903B	A0903A	2	
100418	A0903B	A0403B	1	
100418	A0904A	A0903A	1	
100418	A0904A	A0904B	2	
100418	A0904B	A0904A	2	
100809	A0906A	A0826A	1	
100902	A0912B	A0728B	1	
200922	A0915B	B0925A	1	
200926	A0916B	A1017B	1	
200921	A0916B	B0921B	2	
200901	A0922B	B0908A	1	

TITLE	WL	DOCUMENT NO.	SHEET NO.	REV.
Logic Wirewrap		77568131	5	AC

SIGNAL NAME OR NUMBER IDENTIFICATION	ORIGIN	DESTINATION	Z LEVEL	NOTES
200901	A0922B	A0721B	2	
200902	A0923B	B0907A	1	
200902	A0923B	A0716B	2	
100901	A0924B	B0915A	2	
100901	A0924B	A0833A	1	
200926	A0925B	B0812A	2	
200926	A0925B	B0913B	1	
200609	A0926B	B0617B	1	
100806	A0927A	A0822A	1	
200909	A0927B	B0930B	1	
100701	A0928B	A0726B	1	
300018	A0931A	A0932A	1	
300018	A0931A	A0931B	2	
300018	A0931B	A0931A	2	
300018	A0932A	A1032B	2	
300018	A0932A	A0931A	1	
100417	A0932B	A0432B	1	
300018	A0932B	JA8114B	2	
101012	A0933A	A1033B	2	
101012	A0933B	A1033B	1	
300006	A1001A	JA8105A	1	
101005	A1002A	JA8113A	1	
101011	A1002B	A0902A	2	
101011	A1002B	A0902B	1	
101009	A1003A	JA8229B	1	
101007	A1004B	JA8229A	1	
100407	A1005B	A1023B	2	
100404	A1012A	JA8001A	1	
100409	A1012B	B0102A	1	
100409	A1012B	A0214B	2	
100409	A1012B	JA8009B	1	
300025	A1013A	A0426A	2	
101004	A1014B	B0912A	1	
100403	A1015B	A0407A	2	
101003	A1017A	B0923B	1	
200926	A1017B	A0916B	1	
101010	A1021A	A0416B	1	
101002	A1021B	A0424B	1	
101001	A1022A	B0926B	1	
100407	A1023B	A0415B	1	
100407	A1023B	A1005B	2	
101015	A1026A	JA8006A	1	
100408	A1026B	JA8005A	1	
101018	A1027A	JA8010A	1	
100405	A1027B	A0412B	2	
101013	A1028A	JA8005B	1	
101017	A1028B	JA8003B	1	
101014	A1029A	JA8006B	1	
101016	A1029B	JA8004B	1	
200810	A1030B	JA8004A	2	
300018	A1032B	A0932A	2	
300018	A1032B	JA8114B	1	

TITLE	WL	DOCUMENT NO.	SHEET NO.	REV.
Logic Wirewrap		77568131	6	AC

SIGNAL NAME OR NUMBER IDENTIFICATION	ORIGIN	DESTINATION	Z LEVEL	NOTES
101012	A1033B	A0933A	2	
101012	A1033B	A0933B	1	
101019	A1034A	JA8010B	1	
100409	B0102A	A1012B	1	
100409	B0102B	B0712B	1	
100409	B0103A	A0214B	2	
100409	B0103A	JA8009B	1	
200802	B0104A	A0405A	2	
200802	B0104A	B0813B	1	
200801	B0104B	B0821B	1	
200114	B0105A	JA8225A	1	
200113	B0105B	JA8225B	1	
200112	B0106A	JA8218A	1	
200111	B0106B	JA8218B	1	
100401	B0107A	A0408B	1	
200915	B0107B	B0911A	2	
200915	B0107B	A0230B	1	
200118	B0108A	JA8216A	1	
200117	B0108B	JA8216B	1	
200116	B0109A	JA8215A	1	
200115	B0109B	JA8215B	1	
200102	B0110A	B0710B	1	
200101	B0110B	B0723B	1	
200132	B0111A	JA8239B	1	
200131	B0111B	JA8240A	1	
200134	B0112A	JA8238B	1	
200133	B0112B	JA8238A	1	
200814	B0113A	B0831B	1	
200818	B0113B	B0824B	1	
200140	B0114A	JA8221A	1	
200139	B0114B	JA8221B	1	
200141	B0115A	JA8230A	1	
200142	B0115B	JA8230B	1	
200204	B0116A	A0225B	1	
200204	B0116A	B0227A	2	
200202	B0116B	B0121A	2	
200202	B0116B	B0832B	1	
200924	B0117A	A0810B	1	
200221	B0117B	B0202A	2	
200221	B0117B	A0223A	1	
200202	B0121A	B0224A	1	
200202	B0121A	B0116B	2	
200211	B0121B	A0527B	1	
200110	B0122A	B0134A	1	
200206	B0122B	B0228A	2	
200206	B0122B	A0225A	1	
200815	B0123A	B0830A	1	
100101	B0123B	A0221A	2	
200912	B0124A	B0605B	2	
200912	B0124A	B0632A	1	
100406	B0124B	A0426B	1	
200122	B0125A	JA8219A	1	

TITLE	WL	DOCUMENT NO.	SHEET NO.	REV.
Logic Wirewrap		77568131	7	AC

SIGNAL NAME OR NUMBER IDENTIFICATION	ORIGIN	DESTINATION	Z LEVEL	NOTES
200121	B0125B	JA8219B	1	
200120	B0126A	JA8217A	1	
200119	B0126B	JA8217B	1	
200124	B0127A	JA8220A	1	
200123	B0127B	JA8220B	1	
200126	B0128A	JA8234A	1	
200125	B0128B	JA8233B	1	
200130	B0129A	JA8237A	1	
200129	B0129B	JA8236B	1	
200128	B0130A	JA8235A	1	
200127	B0130B	JA8235B	1	
100601	B0131A	A0627B	1	
200325	B0131B	A0626B	1	
200105	B0132A	JA8102A	1	
200107	B0132B	JA8104A	1	
200106	B0133B	JA8103A	1	
200110	B0134A	B0122A	1	
300012	B0134A	JA8201B	2	
200221	B0202A	B0117B	2	
100404	B0202B	B0615A	1	
200222	B0202B	A0410B	2	
200217	B0203A	A0223B	1	
200258	B0203B	B0722B	1	
200816	B0204A	B0830B	1	
200817	B0204B	B0829A	1	
200261	B0205A	JA8214A	1	
200262	B0205B	JA8214B	1	
200261	B0206A	JA8227A	1	
200264	B0206B	JA8227B	1	
200253	B0207A	JA8203B	1	
200252	B0207B	JA8203A	1	
200259	B0208A	JA8245A	1	
200260	B0208B	JA8245B	1	
200245	B0209A	JA8212B	1	
200244	B0209B	JA8212A	1	
200243	B0210A	JA8213B	1	
200242	B0210B	JA8213A	1	
200249	B0211A	JA8202B	1	
200248	B0211B	JA8202A	1	
200247	B0212A	JA8201B	1	
200246	B0212B	JA8201A	1	
200241	B0213A	JA8211B	1	
200240	B0213B	JA8211A	1	
200239	B0214A	JA8210B	1	
200238	B0214B	JA8210A	1	
200237	B0215A	JA8209B	1	
200236	B0215B	JA8209A	1	
200235	B0216A	JA8208B	1	
200234	B0216B	JA8208A	1	
200233	B0217A	JA8207B	1	
200232	B0217B	JA8207A	1	
200231	B0221A	JA8206B	1	

TITLE	WL	DOCUMENT NO.	SHEET NO.	REV.
Logic Wirewrap		77568131	8	AC

SIGNAL NAME OR NUMBER IDENTIFICATION	ORIGIN	DESTINATION	Z LEVEL	NOTES
200230	B0221B	JA8206A	1	
200229	B0222A	JA8205B	1	
200228	B0222B	JA8205A	1	
200227	B0223A	JA8204B	1	
200226	B0223B	JA8204A	1	
200202	B0224A	B0121A	1	
200208	B0224B	A0224A	2	
200208	B0224B	B0628B	1	
200216	B0225A	B0626B	1	
200216	B0225A	A0226A	2	
200212	B0225B	B0624A	1	
200212	B0225B	A0229A	2	
200214	B0226A	A0227A	2	
200214	B0226A	B0622B	1	
200210	B0226B	A0228A	2	
200210	B0226B	B0629B	1	
200204	B0227A	B0116A	2	
200204	B0227A	B0633A	1	
200201	B0227B	B0616B	1	
200201	B0227B	A0413A	2	
200206	B0228A	B0630A	1	
200206	B0228A	B0122B	2	
200205	B0228B	A0822B	1	
200203	B0229A	A0413B	1	
200207	B0229B	A0821A	1	
200209	B0230A	A0412A	1	
200213	B0230B	B0812B	1	
300804	B0230B	A0811B	2	
200215	B0231B	A0604B	1	
200220	B0232A	A0232A	2	
200220	B0232A	B0606B	1	
200218	B0232B	A0224B	1	
200218	B0232B	B0621A	2	
200219	B0233A	A0603B	1	
200223	B0233B	B0502A	1	
300012	B0334A	JA8234B	1	
300012	B0334A	JA8240B	2	
300012	B0434A	JA8239A	1	
300012	B0434A	JA8243A	2	
200223	B0502A	B0233B	1	
300012	B0534A	JA8236A	2	
300012	B0534A	JA8233A	1	
200610	B0602A	A0711B	1	
200611	B0602B	A0725B	1	
200612	B0603A	A0712B	1	
200908	B0603B	B0914A	1	
200613	B0604A	A0713A	1	
200608	B0604B	A0727A	1	
200920	B0605A	B0910B	1	
200912	B0605B	B0903A	1	
200912	B0605B	B0124A	2	
200614	B0606A	B0917B	1	

TITLE	WL	DOCUMENT NO.	SHEET NO.	REV.
Logic Wirewrap		77568131	9	AC

SIGNAL NAME OR NUMBER IDENTIFICATION	ORIGIN	DESTINATION	Z LEVEL	NOTES
200220	B0606B	B0232A	1	
200606	B0607A	B0827B	1	
200615	B0607B	B0922B	1	
200618	B0609A	A0717A	1	
200617	B0609B	A0715A	1	
200616	B0610A	A0713B	1	
200619	B0611B	A0716A	1	
200601	B0613A	JA8110A	1	
200604	B0613B	B0904A	1	
200607	B0614A	B0914B	1	
200211	B0614B	A0824A	1	
100404	B0615A	B0202B	1	
200620	B0616A	JA8101B	1	
200201	B0616B	B0712B	2	
200201	B0616B	B0227B	1	
200609	B0617B	A0926B	1	
200218	B0621A	B0232B	2	
200218	B0621A	B0832A	1	
200214	B0622B	B0826B	2	
200214	B0622B	B0226A	1	
200602	B0623B	JA8111A	1	
200212	B0624A	B0826A	2	
200212	B0624A	B0225B	1	
200603	B0624B	JA8112A	1	
200217	B0625A	B0833B	1	
200217	B0625A	A0223B	2	
200916	B0625B	B0915B	1	
200924	B0626A	B0817A	2	
200216	B0626B	B0811B	2	
200216	B0626B	B0225A	1	
200208	B0628B	B0224B	1	
200208	B0628B	B0823B	2	
200210	B0629B	B0226B	1	
200210	B0629B	B0822A	2	
200206	B0630A	B0228A	1	
200206	B0630A	B0823A	2	
200202	B0631A	B0832B	2	
200202	B0631A	A0226B	1	
200912	B0632A	B0124A	1	
200605	B0632B	B0910A	1	
200204	B0633A	B0227A	1	
200204	B0633A	B0825A	2	
200621	B0633B	A0217A	1	
200704	B0701A	B0707B	1	
200704	B0707B	B0701A	1	
100107	B0709A	A0130B	1	
200102	B0710B	B0110A	1	
100409	B0712B	B0102B	1	
200201	B0712B	B0616B	2	
200258	B0722B	B0203B	1	
200101	B0723B	B0110B	1	
200701	B0729A	JA8108B	1	

TITLE	WL	DOCUMENT NO.	SHEET NO.	REV.
Logic Wirewrap		77568131	10	AC

SIGNAL NAME OR NUMBER IDENTIFICATION	ORIGIN	DESTINATION	Z LEVEL	NOTES
200702	B0729B	JA8109B	1	
200705	B0732A	JA8104B	2	
200705	B0732B	B0734A	1	
200705	B0734A	B0732B	1	
200812	B0801A	B0811A	1	
200819	B0801A	B0815B	2	
200820	B0802A	B0802B	2	
200820	B0802A	B0803B	1	
200820	B0802B	B0802A	2	
200820	B0803A	B0808B	2	
200820	B0803B	B0802A	1	
200820	B0803B	B0808A	2	
100307	B0804A	A0311B	1	
200921	B0804B	B0921B	1	
200820	B0805A	B0808A	1	
100306	B0805B	A0332A	1	
200807	B0806A	B0911B	1	
200808	B0806B	B0924A	1	
200805	B0807A	B0932B	1	
200810	B0807B	B0925B	1	
200820	B0808A	B0803B	2	
200820	B0808A	B0805A	1	
200820	B0808B	B0803A	2	
200819	B0808B	B0809B	1	
200814	B0809A	A0424A	1	
200814	B0809A	B0813A	2	
200819	B0809B	B0808B	1	
200819	B0809B	B0814A	2	
100802	B0810A	A0809B	1	
200804	B0810B	A0814B	1	
200812	B0811A	B0801A	1	
200216	B0811B	B0626B	2	
200926	B0812A	A0925B	2	
200213	B0812B	B0230B	1	
200814	B0813A	B0809A	2	
200814	B0813A	B0814B	1	
200802	B0813B	B0104A	1	
200819	B0814A	B0809B	2	
200819	B0814A	B0815B	1	
200814	B0814B	B0813A	1	
100104	B0815A	A0126B	1	
200819	B0815B	B0801A	2	
200819	B0815B	B0814A	1	
100801	B0816A	A0808A	1	
200806	B0816B	B0902A	1	
200924	B0817A	B0906B	1	
200924	B0817A	B0626A	2	
200919	B0817B	A0425B	2	
200919	B0817B	B0907B	1	
200809	B0821A	B0917A	1	
200801	B0821B	B0104B	1	
200210	B0822A	B0629B	2	

TITLE	WL	DOCUMENT NO.	SHEET NO.	REV.
Logic Wirewrap		77568131	11	AC

SIGNAL NAME OR NUMBER IDENTIFICATION	ORIGIN	DESTINATION	Z LEVEL	NOTES
100305	B0822B	A0333A	2	
200206	B0823A	B0630A	2	
200208	B0823B	B0628B	2	
200818	B0824B	B0113B	1	
200204	B0825A	B0633A	2	
200212	B0826A	B0624A	2	
200214	B0826B	B0622B	2	
200803	B0827A	B0933A	1	
200606	B0827B	B0902B	2	
200606	B0827B	B0607A	1	
100805	B0828B	A0823A	1	
200817	B0829A	B0204B	1	
200815	B0830A	B0123A	1	
200816	B0830B	B0204A	1	
100105	B0831A	A0113B	1	
200814	B0831B	B0113A	1	
200218	B0832A	B0621A	1	
200202	B0832B	B0631A	2	
200202	B0832B	B0116B	1	
200811	B0833A	B0929A	1	
200217	B0833B	B0625A	1	
300012	B0834A	JA8244B	1	
200806	B0902A	B0816B	1	
200606	B0902B	B0905B	1	
200606	B0902B	B0827B	2	
200912	B0903A	A0832A	2	
200912	B0903A	B0605B	1	
200904	B0903B	A0410A	1	
200804	B0904A	B0613B	1	
200903	B0904B	A0816A	1	
100807	B0905A	A0812B	1	
200606	B0905B	B0902B	1	
200906	B0906A	A0823B	1	
200924	B0906B	B0817A	1	
200924	B0906B	A0810B	2	
200902	B0907A	A0923B	1	
200919	B0907B	B0817B	1	
200901	B0908A	A0922B	1	
200907	B0909A	B0916A	2	
200605	B0910A	B0632B	1	
200920	B0910B	B0605A	1	
200915	B0911A	B0107B	2	
200807	B0911B	B0806A	1	
101004	B0912A	A1014B	1	
200923	B0912B	A0708A	1	
200911	B0913A	A0710A	1	
200926	B0913B	A0327B	2	
200926	B0913B	A0925B	1	
200908	B0914A	B0603B	1	
200908	B0914A	A0812A	2	
200607	B0914B	B0614A	1	
100901	B0915A	A0924B	2	

TITLE	WL	DOCUMENT NO.	SHEET NO.	REV.
Logic Wirewrap		77568131	12	AC

SIGNAL NAME OR NUMBER IDENTIFICATION	ORIGIN	DESTINATION	# LEVEL	NOTES
200916	B0915B	B0625B	1	
200907	B0916A	A0717B	1	
200907	B0916A	B0909A	2	
200905	B0916B	A0722B	1	
200809	B0917A	B0821A	1	
200614	B0917B	B0606A	1	
200921	B0921B	A0916B	2	
200921	B0921B	B0804B	1	
200910	B0922A	A0813A	1	
200615	B0922B	B0607B	1	
200917	B0923A	B0934A	1	
101003	B0923B	A1017A	1	
200808	B0924A	B0806B	1	
200927	B0924B	JA8004A	1	
200922	B0925A	A0915B	1	
200810	B0925B	B0807B	1	
200925	B0926A	A0825B	1	
101001	B0926B	A1022A	1	
100803	B0927A	A0825A	1	
100302	B0927B	A0308B	1	
100301	B0928B	A0307B	1	
200811	B0929A	B0833A	1	
200922	B0929B	A0707B	1	
200913	B0930A	A0813B	1	
200909	B0930B	A0927B	1	
200918	B0931A	A0702A	1	
100402	B0931B	A0414A	1	
200805	B0932B	B0807A	1	
200803	B0933A	B0827A	1	
100404	B0933B	A0707A	2	
200917	B0934A	B0923A	1	
100404	JA8001A	A1012A	1	
100404	JA8001A	A0411B	2	
100410	JA8002B	A0409A	1	
101020	JA8003A	A0133B	1	
101017	JA8003B	A1028B	1	
200810	JA8004A	A1030B	2	
200927	JA8004A	B0924B	1	
101016	JA8004B	A1029B	1	
100408	JA8005A	A1026B	1	
200914	JA8005A	A0415A	2	
101013	JA8005B	A1028A	1	
101015	JA8006A	A1026A	1	
101014	JA8006B	A1029A	1	
100416	JA8007A	A0101A	1	
100416	JA8007B	A0101A	2	
300016	JA8008A	JA8102B	1	
300017	JA8008B	JA8112B	1	
100409	JA8009B	B0103A	1	
100409	JA8009B	A1012B	1	
101018	JA8010A	A1027A	1	
101019	JA8010B	A1034A	1	

TITLE	WL	DOCUMENT NO.	SHEET NO.	REV.
Logic Wirewrap		77568131	13	AC

SIGNAL NAME OR NUMBER IDENTIFICATION	ORIGIN	DESTINATION	Z LEVEL	NOTES
100412	JA8011A	A0428A	1	
100414	JA8011B	A0417A	1	
100413	JA8012A	A0417B	1	
100405	JA8013A	A0412B	1	
100415	JA8014A	A0422B	1	
100417	JA8014B	A0134B	1	
300013	JA8101A	A0601A	1	
200620	JA8101B	B0616A	1	
200105	JA8102A	B0132A	1	
300016	JA8102B	JA8008A	1	
200106	JA8103A	B0133B	1	
300019	JA8103B	A0601B	1	
200107	JA8104A	B0132B	1	
200705	JA8104B	B0732A	2	
300006	JA8105A	A1001A	1	
300004	JA8105B	A0521B	1	
300005	JA8106A	A0522B	1	
300002	JA8106B	A0508B	1	
300015	JA8107A	A0801A	1	
300003	JA8107B	A0507B	1	
300001	JA8108A	A0414B	1	
200701	JA8108B	B0729A	1	
300007	JA8109A	A0409B	1	
200702	JA8109B	B0729B	1	
200601	JA8110A	B0613A	1	
200201	JA8110B	A0413A	1	
200602	JA8111A	B0623B	1	
300020	JA8111B	A0634B	1	
200603	JA8112A	B0624B	1	
300017	JA8112B	JA8008B	1	
101005	JA8113A	A1002A	1	
300021	JA8113B	A0633B	1	
300014	JA8114A	A0701A	1	
300018	JA8114B	A0932B	2	
300018	JA8114B	A1032B	1	
200246	JA8201A	B0212B	1	
200247	JA8201B	B0212A	1	
300012	JA8201B	B0134A	2	
200248	JA8202A	B0211B	1	
200249	JA8202B	B0211A	1	
200252	JA8203A	B0207B	1	
200253	JA8203B	B0207A	1	
200226	JA8204A	B0223B	1	
200227	JA8204B	B0223A	1	
200228	JA8205A	B0222B	1	
200229	JA8205B	B0222A	1	
200230	JA8206A	B0221B	1	
200231	JA8206B	B0221A	1	
200232	JA8207A	B0217B	1	
200233	JA8207B	B0217A	1	
200234	JA8208A	B0216B	1	
200235	JA8208B	B0216A	1	

TITLE	WL	DOCUMENT NO.	SHEET NO.	REV.
Logic Wirewrap		77568131	14	AC

SIGNAL NAME OR NUMBER IDENTIFICATION	ORIGIN	DESTINATION	Z LEVEL	NOTES
200236	JA8209A	B0215B	1	
200237	JA8209B	B0215A	1	
200238	JA8210A	B0214B	1	
200239	JA8210B	B0214A	1	
200240	JA8211A	B0213B	1	
200241	JA8211B	B0213A	1	
200244	JA8212A	B0209B	1	
200245	JA8212B	B0209A	1	
200242	JA8213A	B0210B	1	
200243	JA8213B	B0210A	1	
200261	JA8214A	B0205A	1	
200262	JA8214B	B0205B	1	
200116	JA8215A	B0109A	1	
200115	JA8215B	B0109B	1	
200118	JA8216A	B0108A	1	
200117	JA8216B	B0108B	1	
200120	JA8217A	B0126A	1	
200119	JA8217B	B0126B	1	
200112	JA8218A	B0106A	1	
200111	JA8218B	B0106B	1	
200122	JA8219A	B0125A	1	
200121	JA8219B	B0125B	1	
200124	JA8220A	B0127A	1	
200123	JA8220B	B0127B	1	
200140	JA8221A	B0114A	1	
200139	JA8221B	B0114B	1	
100421	JA8222A	A0423A	1	
100422	JA8222B	A0423B	1	
100425	JA8223A	A0429A	1	
100426	JA8223B	A0429B	1	
100427	JA8224A	A0430A	1	
100428	JA8224B	A0430B	1	
200114	JA8225A	B0105A	1	
200113	JA8225B	B0105B	1	
100419	JA8226A	A0421A	1	
100420	JA8226B	A0421B	1	
200261	JA8227A	B0206A	1	
200264	JA8227B	B0206B	1	
100432	JA8228A	A0432A	1	
100433	JA8228B	A0433A	1	
101007	JA8229A	A1004B	1	
101009	JA8229B	A1003A	1	
200141	JA8230A	B0115A	1	
200142	JA8230B	B0115B	1	
300012	JA8233A	B0534A	1	
200125	JA8233B	B0128B	1	
200126	JA8234A	B0128A	1	
300012	JA8234B	B0334A	1	
200128	JA8235A	B0130A	1	
200127	JA8235B	B0130B	1	
300012	JA8236A	B0534A	2	
200129	JA8236B	B0129B	1	

TITLE	WL	DOCUMENT NO.	SHEET NO.	REV.
Logic Wirewrap		77568131	15	AC

SIGNAL NAME OR NUMBER IDENTIFICATION	ORIGIN	DESTINATION	Z LEVEL	NOTES
200130	JA8237A	B0129A	1	
200133	JA8238A	B0112B	1	
200134	JA8238B	B0112A	1	
300012	JA8239A	B0434A	1	
200132	JA8239B	B0111A	1	
200131	JA8240A	B0111B	1	
300012	JA8240B	B0334A	2	
100423	JA8241A	A0427A	1	
100424	JA8241B	A0427B	1	
100429	JA8242A	A0431A	1	
100430	JA8242B	A0431B	1	
300012	JA8243A	B0434A	2	
300012	JA8244B	B0834A	1	
200259	JA8245A	B0208A	1	
200260	JA8245B	B0208B	1	

There is no Section 3

SECTION 4

COMPONENT LAYOUTS,

SMD LOGIC CARDS

The diagrams in this section show the physical placement of the components on each of the logic cards in the SMD. For purposes of this discussion, ICs and transistors are called major components, whereas the resistors, diodes and capacitors associated with those major components are called discrete components. The component identifiers match those shown in the logic diagram set for that card.

MAJOR-COMPONENT IDENTIFICATION

Dual-in-line IC packages (DIPs) are identified by their coordinate grid locations, A1 through E4, as defined in the diagrams section of volume 2 of the SMD hardware maintenance manual. Other major components, including transistors and non-DIP ICs, are identified by a number (which has no location significance), preceded by a mnemonic code such as Q (transistor), AR (amplifier), and so on.

In this scheme, the number in the major component identifier is unique. That is, the non-grid-oriented (non-DIP) major components on a card may be labelled

Q1, Q2, AR3, Q4, AR5, etc.,

but not

Q1, Q2, AR3, Q3...,

since the number 3 would be used twice, and that is not allowed in this scheme.

DISCRETE-COMPONENT IDENTIFICATION

Discrete components, in addition to their normal identification such as R1, R2, C1, and so on, are prefixed by an associative code that reflects their application, as explained below.

POWER SUPPLY COMPONENTS

Discrete components (on a card) that are associated with the power supplies carry an associative code of 98 or 99:

98C1, 98R1, etc: -V supply
99R1, 99VR1, etc: +V supply

Associative code — Component ID

DIP COMPONENTS

Discrete components associated with the grid-oriented ICs carry the alphanumeric grid coordinates as their associative code. The first character, therefore, is always a letter:

A1R1, A1CR1, etc.

Associative code

Usually the associative code also implies the approximate physical location of the discrete component, but this is not a hand and fast rule.

NON-DIP COMPONENTS

Discrete components associated with transistors or other non-grid-oriented major components carry the "uniqueness" number of that major component as their associative code:

1R1, 3C1, etc.

Associative code

Again, the associative code does not necessarily mean that the discrete components will be physically clustered around the corresponding major component.

NOTE

Numbers adjacent to the components are "find" numbers from the parts list used during card assembly. Disregard them. Also, note that the grid-oriented major components carry a U-prefix.

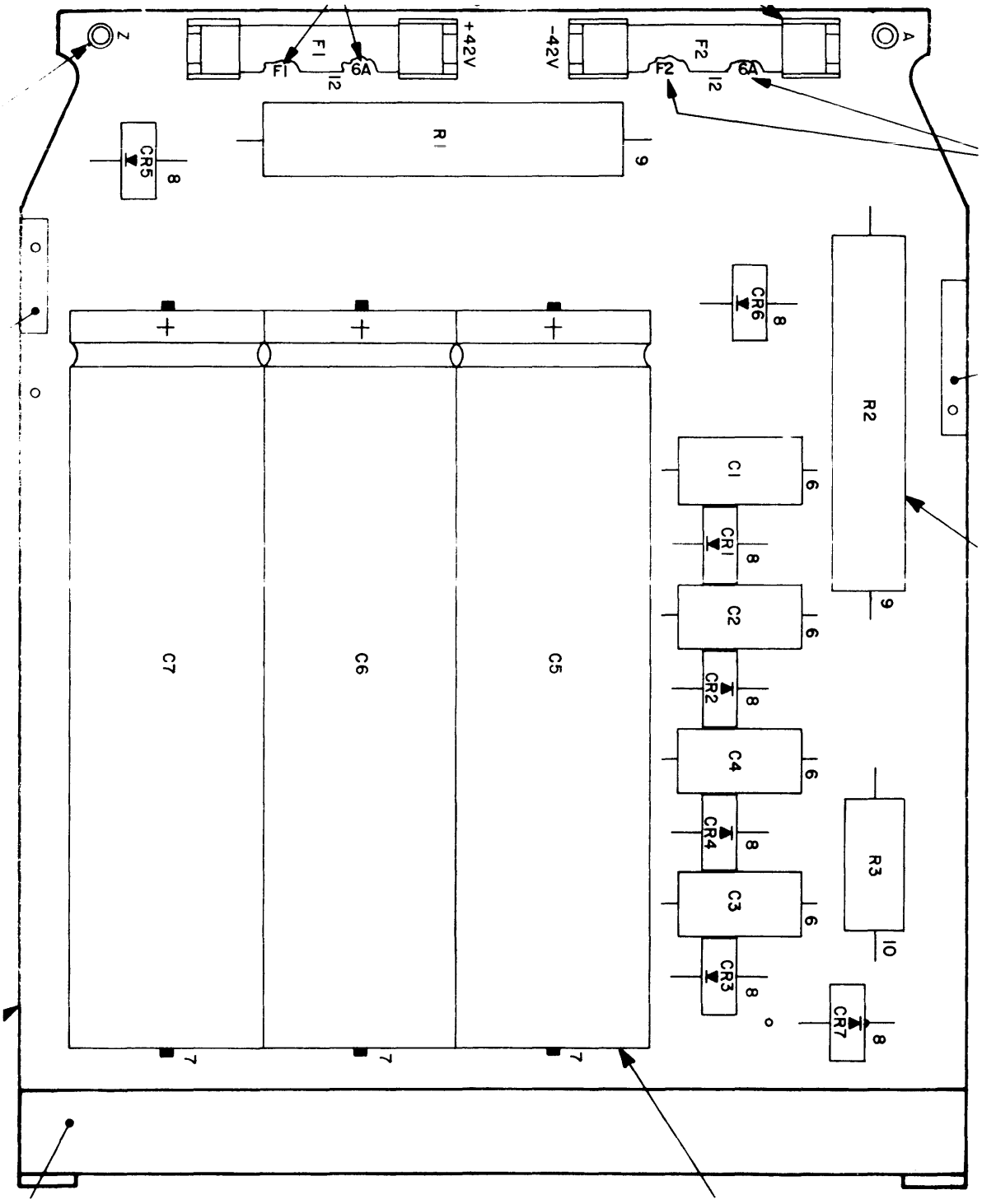
Z
A
+42V
-42V
F1
6A
12
F2
6A
12
R1
9
CR5
8
CR6
8
R2
9
C1
6
CR1
8
C2
6
CR2
8
C4
6
CR4
8
C3
6
CR3
8
R3
10
CR7
8
C7
C6
C5
7
7
7

A1A01 (5SJV)

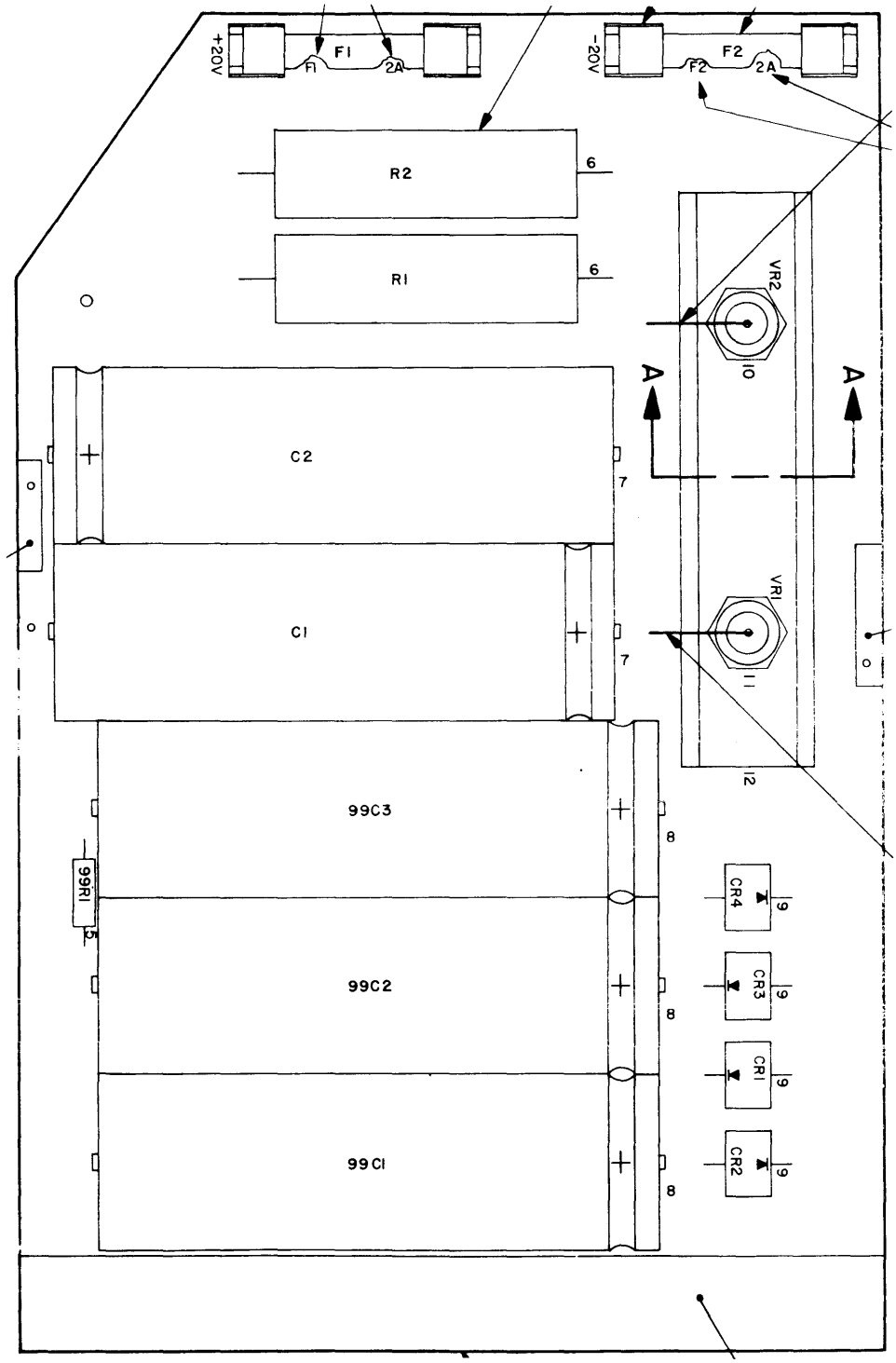
+20V
F1
2A
-20V
F2
2A
R2
6
R1
6
VR2
10
A
A
C2
7
C1
7
VR1
11
12
99C3
8
99R1
5
99C2
8
99C1
8
CR4
9
CR3
9
CR1
9
CR2
9

A1A02 (5SKV)

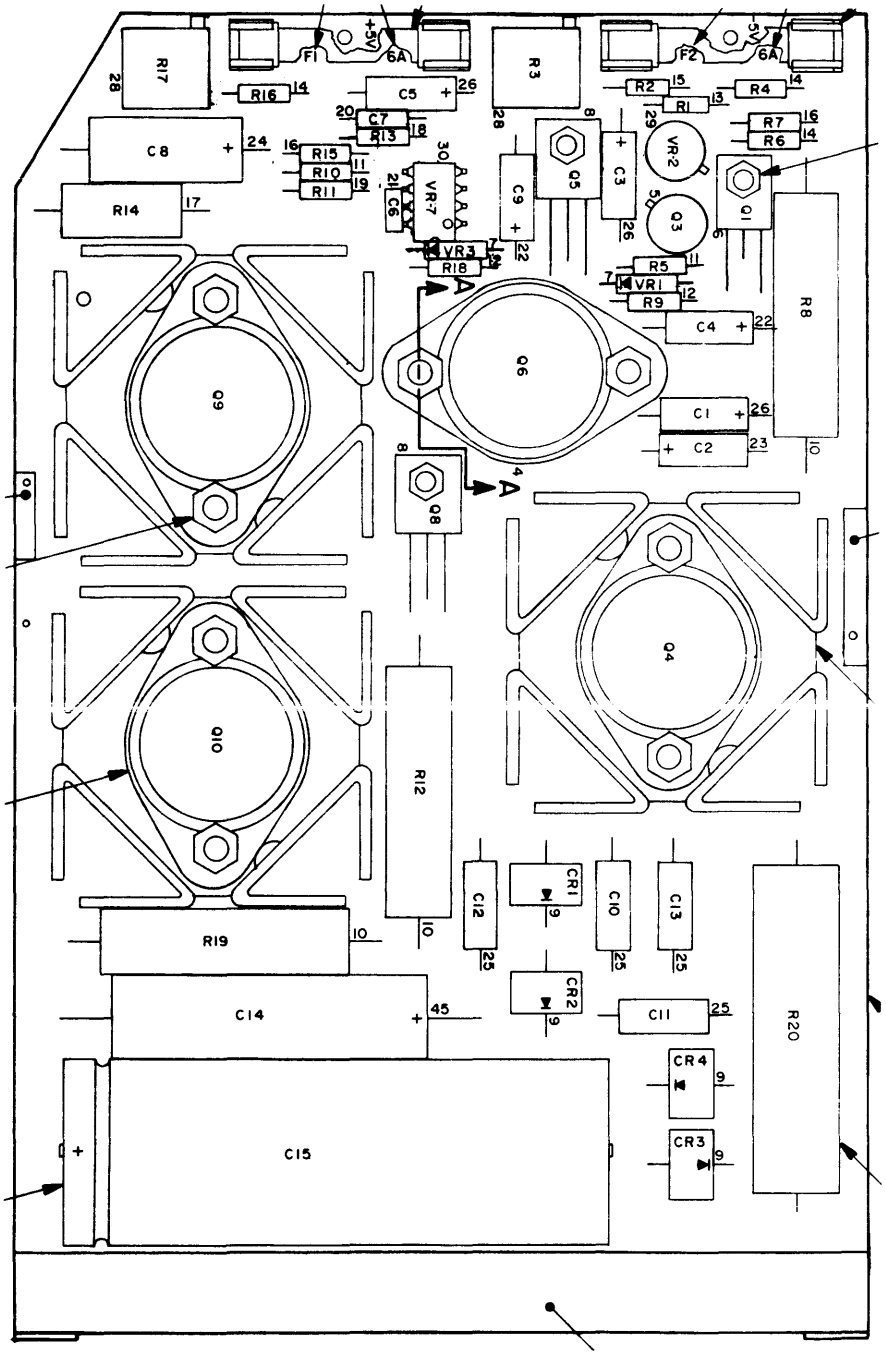
R17
R16
C5
C7
R13
C8
R15
R10
R11
R14
C6
VR7
VR3
R18
C9
Q5
C3
VR2
Q3
Q1
R7
R6
R5
VR1
R9
C4
R8
C1
C2
Q9
Q6
Q8
Q4
Q10
R12
C12
CR1
C10
C13
R19
C14
CR2
C11
R20
CR4
CR3
C15
F1
F2
+5V
6A
R3
R2
R1
R4
A
A

A1A03 (ASHV)

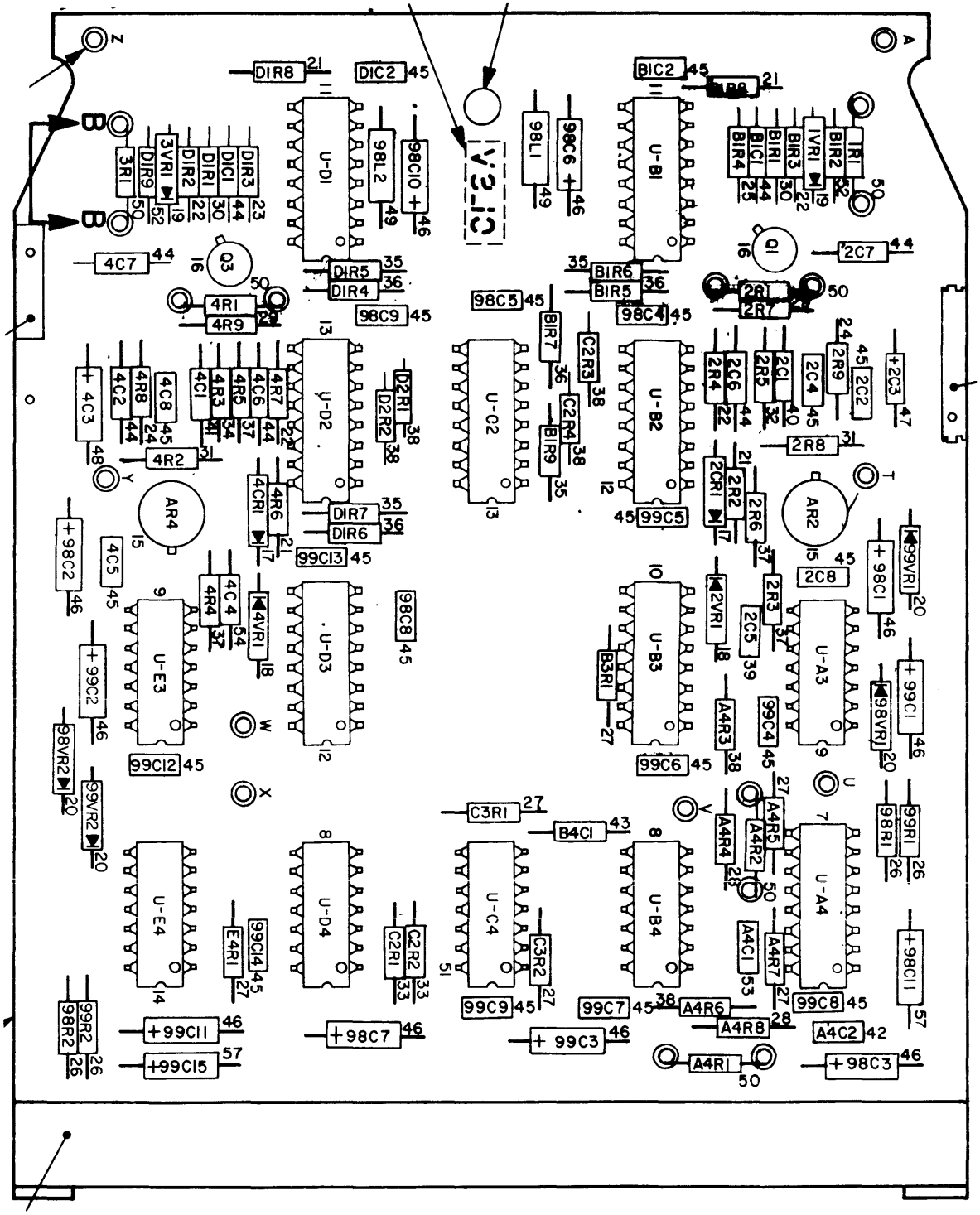

A2A01 (CLSV)

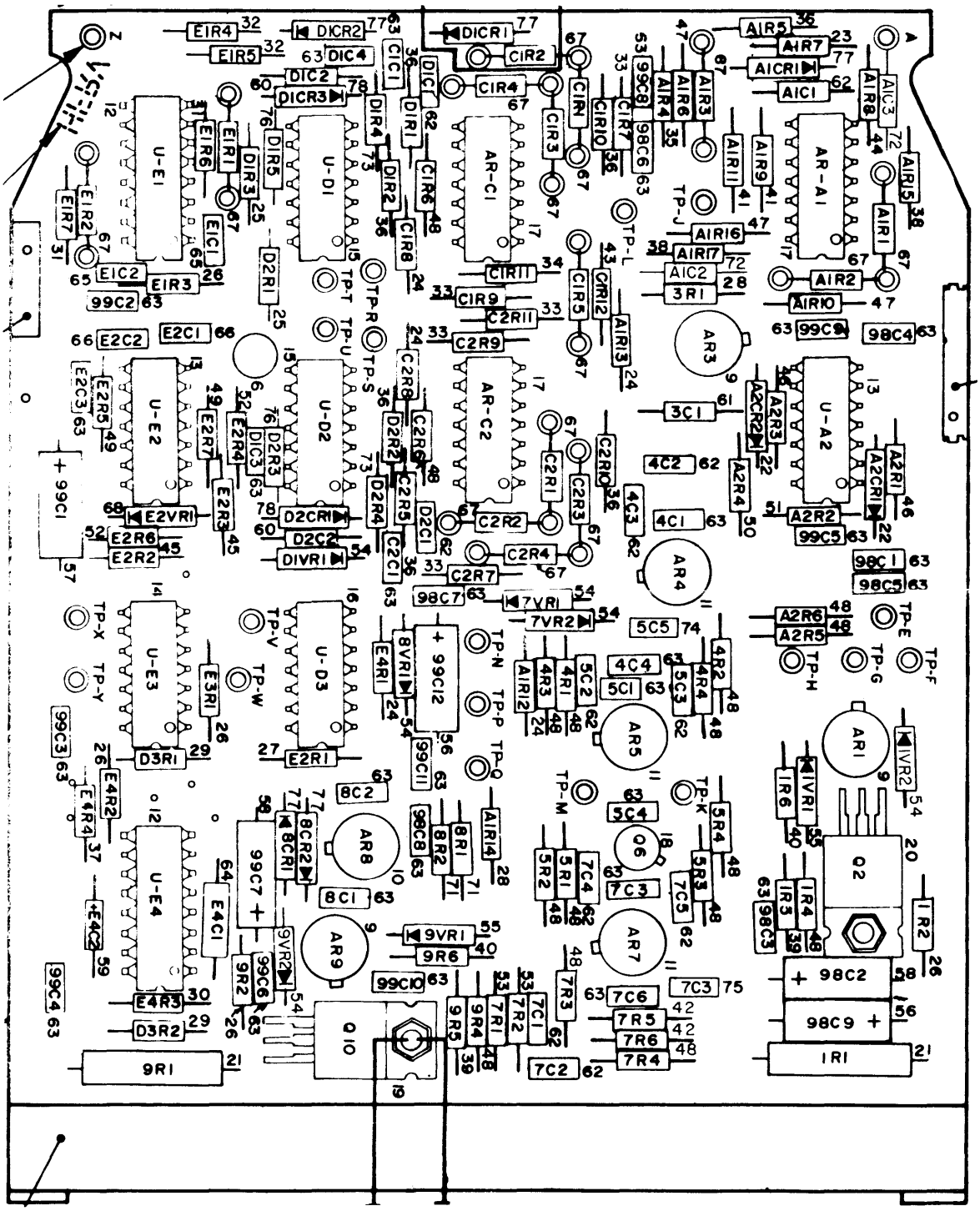
U-E1
U-D1
AR-C1
AR-A1
U-E2
U-D2
AR-C2
U-A2
U-E3
U-D3
U-E4
AR1
AR3
AR4
AR5
AR7
AR8
AR9
Q2
Q6
Q10
TP-E
TP-F
TP-G
TP-H
TP-J
TP-K
TP-L
TP-M
TP-N
TP-P
TP-Q
TP-R
TP-S
TP-T
TP-U
TP-V
TP-W
TP-X
TP-Y

A2A03 (HFRV)

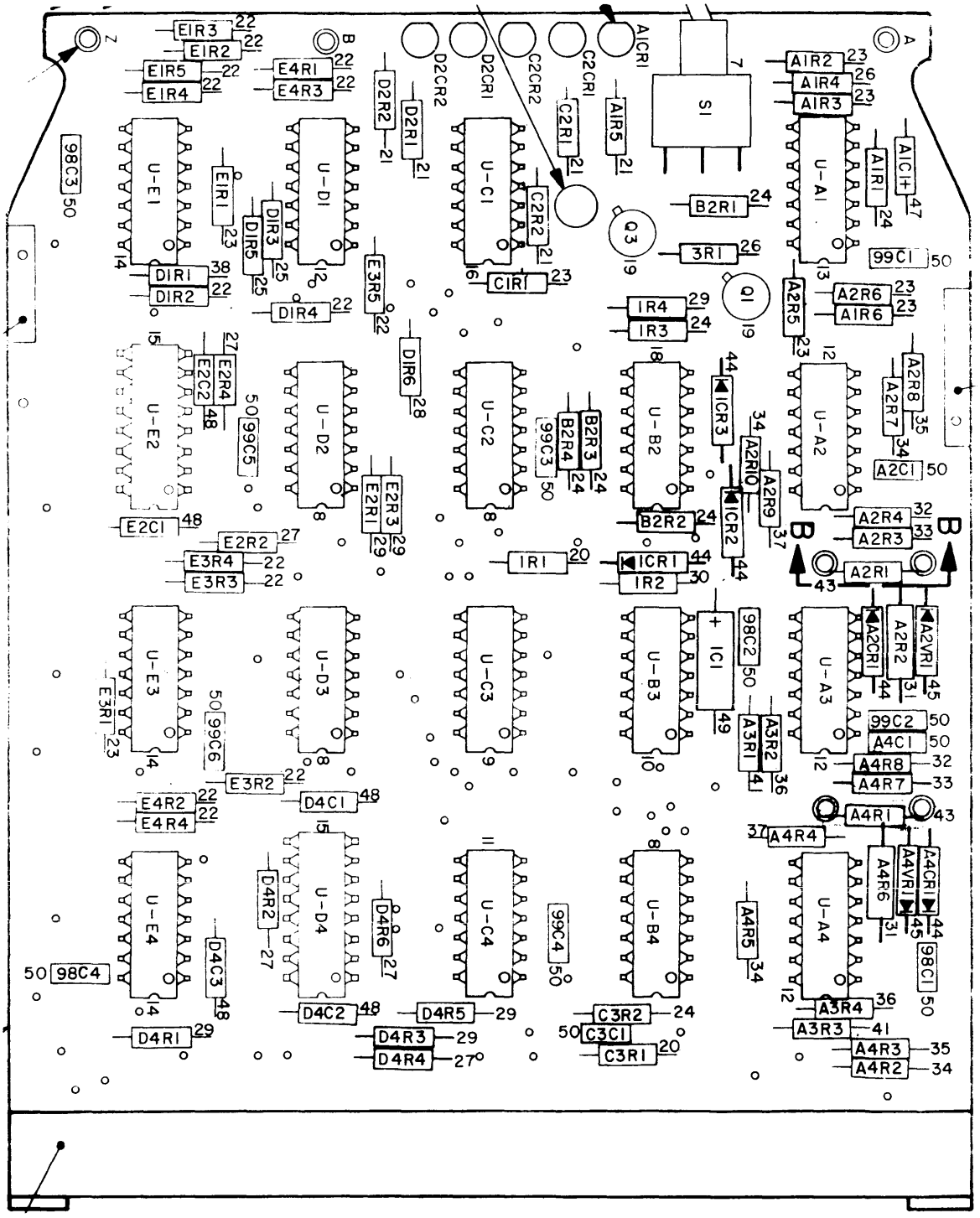

U-E1
U-D1
U-C1
U-A1
U-E2
U-D2
U-C2
U-B2
U-A2
U-E3
U-D3
U-C3
U-B3
U-A3
U-E4
U-D4
U-C4
U-B4
U-A4
S1
Q1
Q3

A2A04 (EKFV)

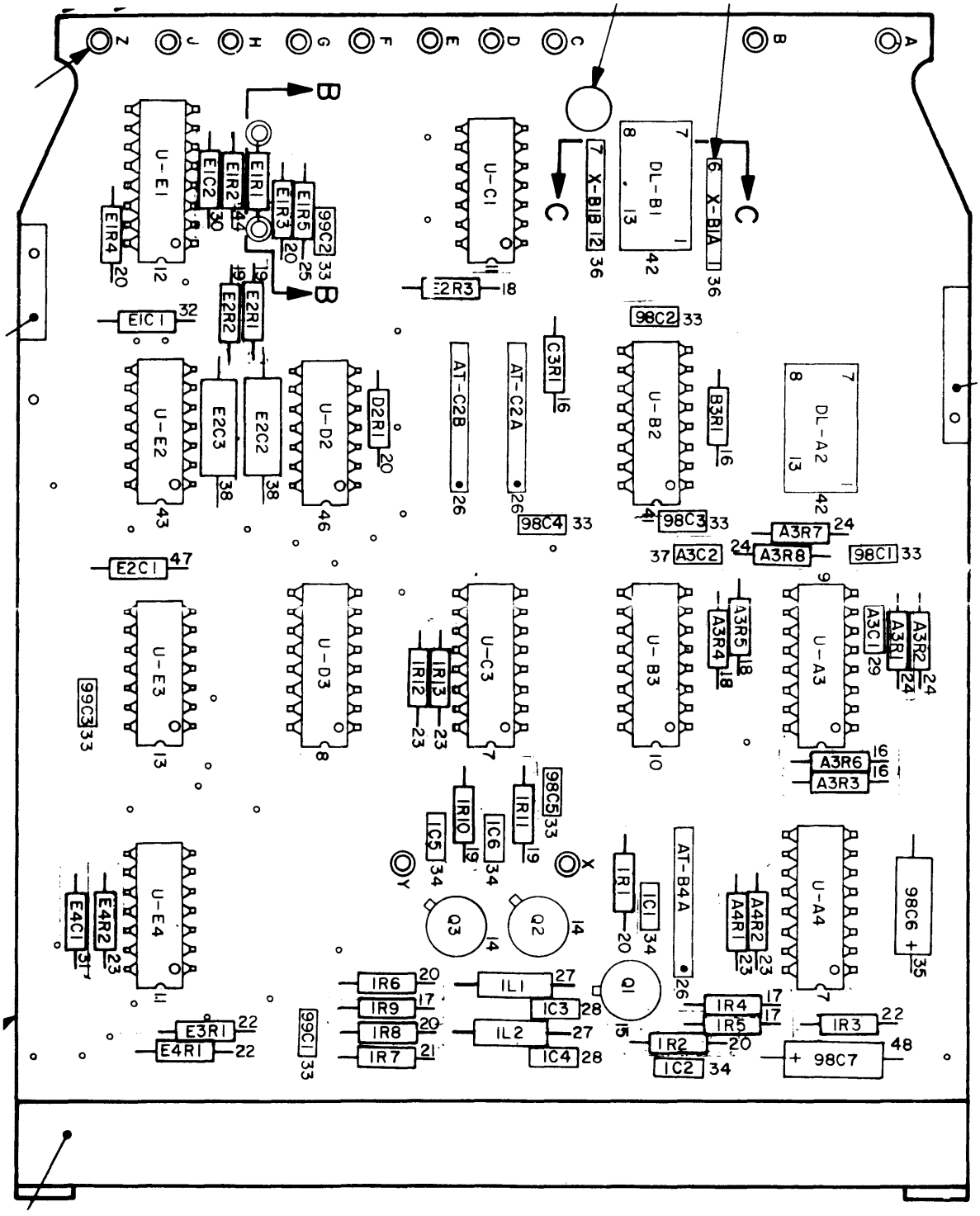
U-E1
U-C1
DL-B1
X-B1B
X-B1A
U-B2
DL-A2
U-E2
U-D2
AT-C2B
AT-C2A
U-B3
U-A3
U-E3
U-D3
U-C3
U-A4
U-E4
AT-B4A
Q1
Q2
Q3
98C1
98C2
98C3
98C4
98C5
98C6
98C7
99C1
99C2
99C3
A3C1
A3R1
A3R2
A3R3
A3R4
A3R5
A3R6
A3R7
A3R8
A3C2
A4R1
A4R2
B3R1
C3R1
D2R1
E1C1
E1C2
E1R1
E1R2
E1R3
E1R4
E1R5
E2C1
E2C2
E2C3
E2R1
E2R2
E3R1
E4C1
E4R1
E4R2
IC1
IC2
IC3
IC4
IC5
IC6
IL1
IL2
IR1
IR2
IR3
IR4
IR5
IR6
IR7
IR8
IR9
IR10
IR11
IR12
IR13

A2A05 (HLRV)

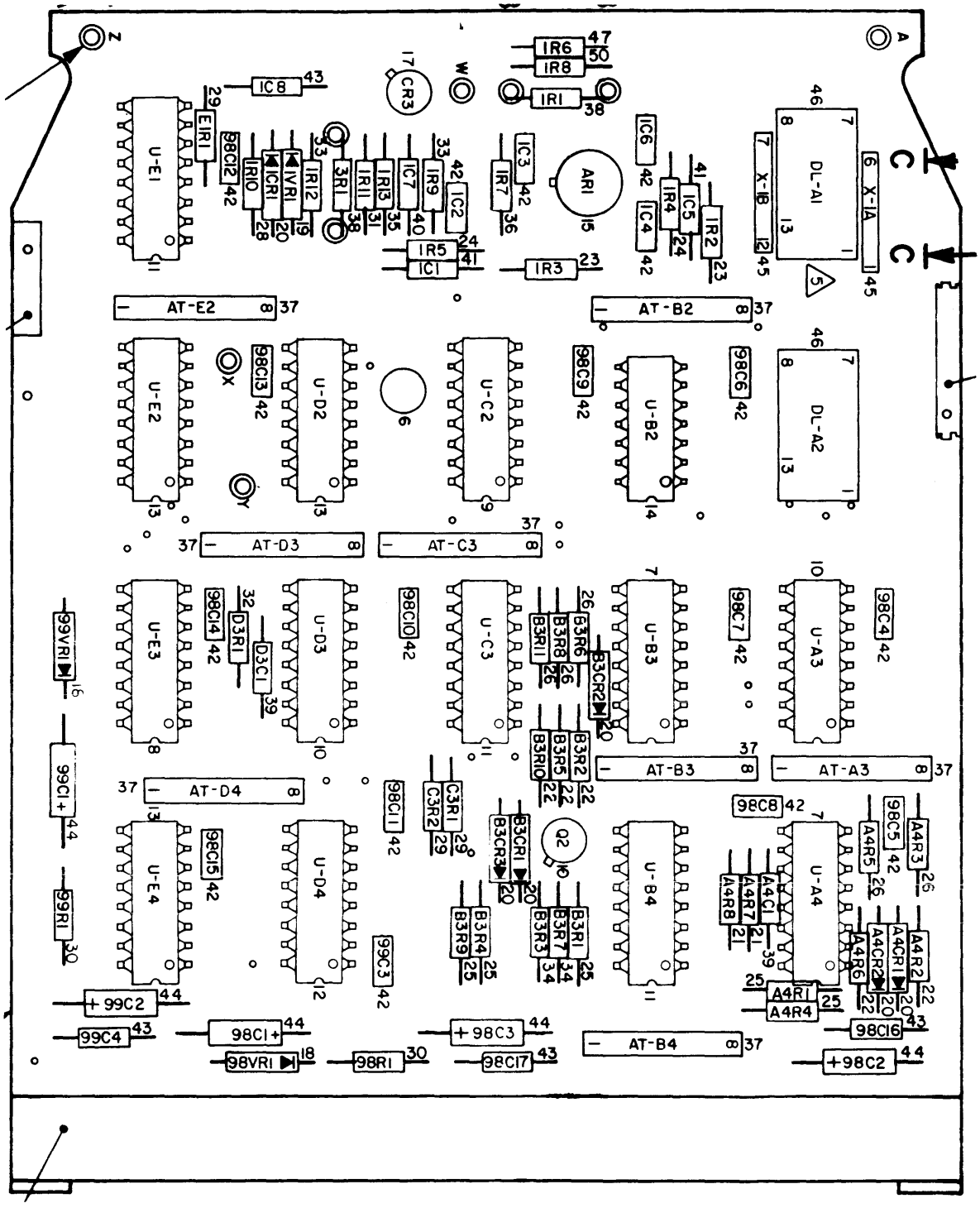
U-E1
U-E2
U-E3
U-E4
U-D2
U-D3
U-D4
U-C2
U-C3
U-B2
U-B3
U-B4
U-A3
U-A4
DL-A1
DL-A2
AT-E2
AT-B2
AT-D3
AT-C3
AT-D4
AT-B3
AT-A3
AT-B4
AR1
CR3
Q2
IR1
IR2
IR3
IR4
IR5
IR6
IR7
IR8
IR9
IR10
IR11
IR12
IR13
IC1
IC2
IC3
IC4
IC5
IC6
IC7
IC8
EIR1
X-1A
X-1B
98C1+
98C2
98C3
98C4
98C5
98C6
98C7
98C8
98C9
98C10
98C11
98C12
98C13
98C14
98C15
98C16
98C17
98R1
98VR1
99C1+
99C2
99C3
99C4
99R1
99VR1
A4R1
A4R2
A4R3
A4R4
A4R5
A4R6
A4R7
A4R8
A4C1
A4CR1
A4CR2
B3R1
B3R2
B3R3
B3R4
B3R5
B3R6
B3R7
B3R8
B3R9
B3R10
B3R11
B3CR1
B3CR2
B3CR3
C3R1
C3R2
D3R1
D3C1
3R1

A2A06 (BLZV)

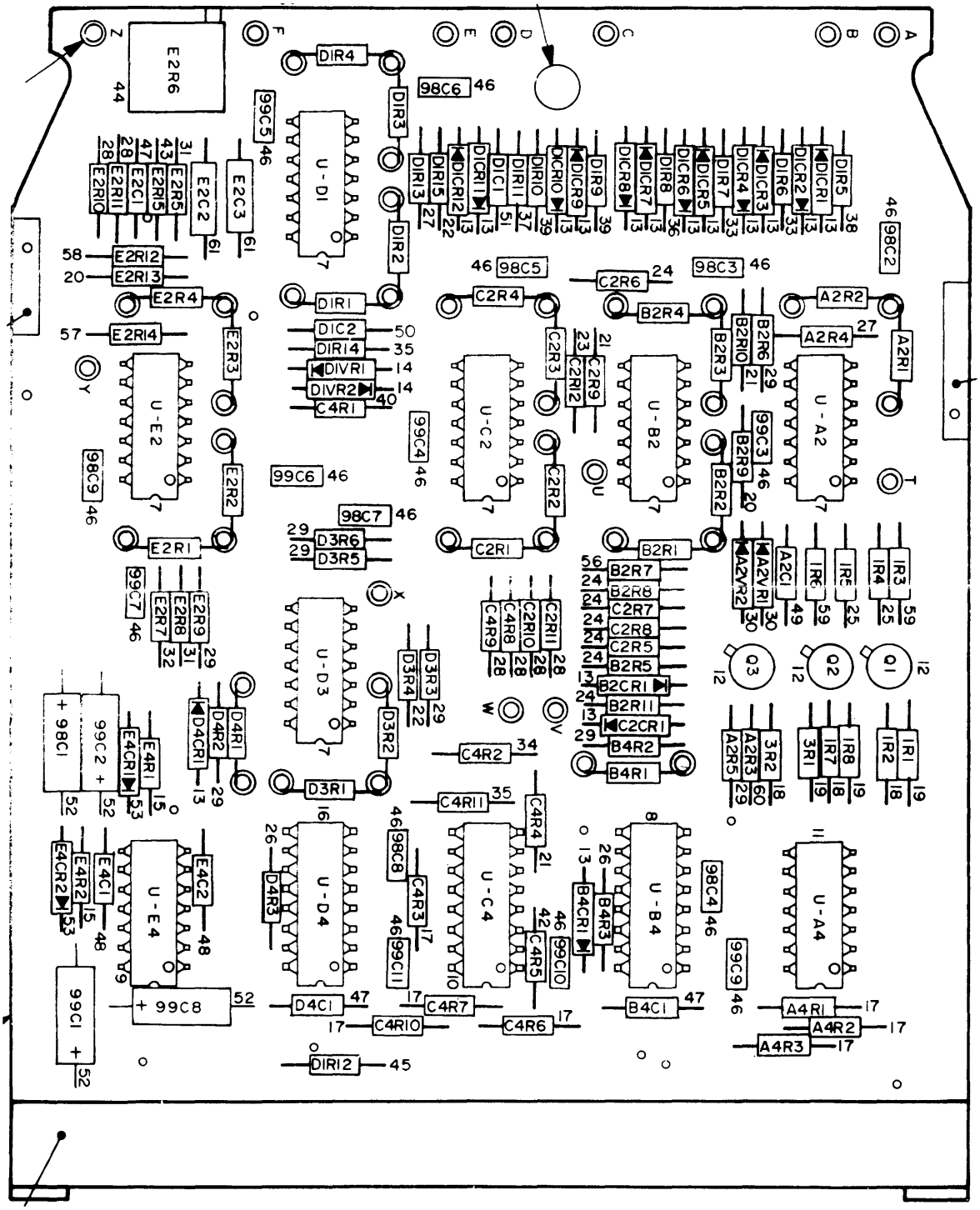

A2A07 (JLQV)

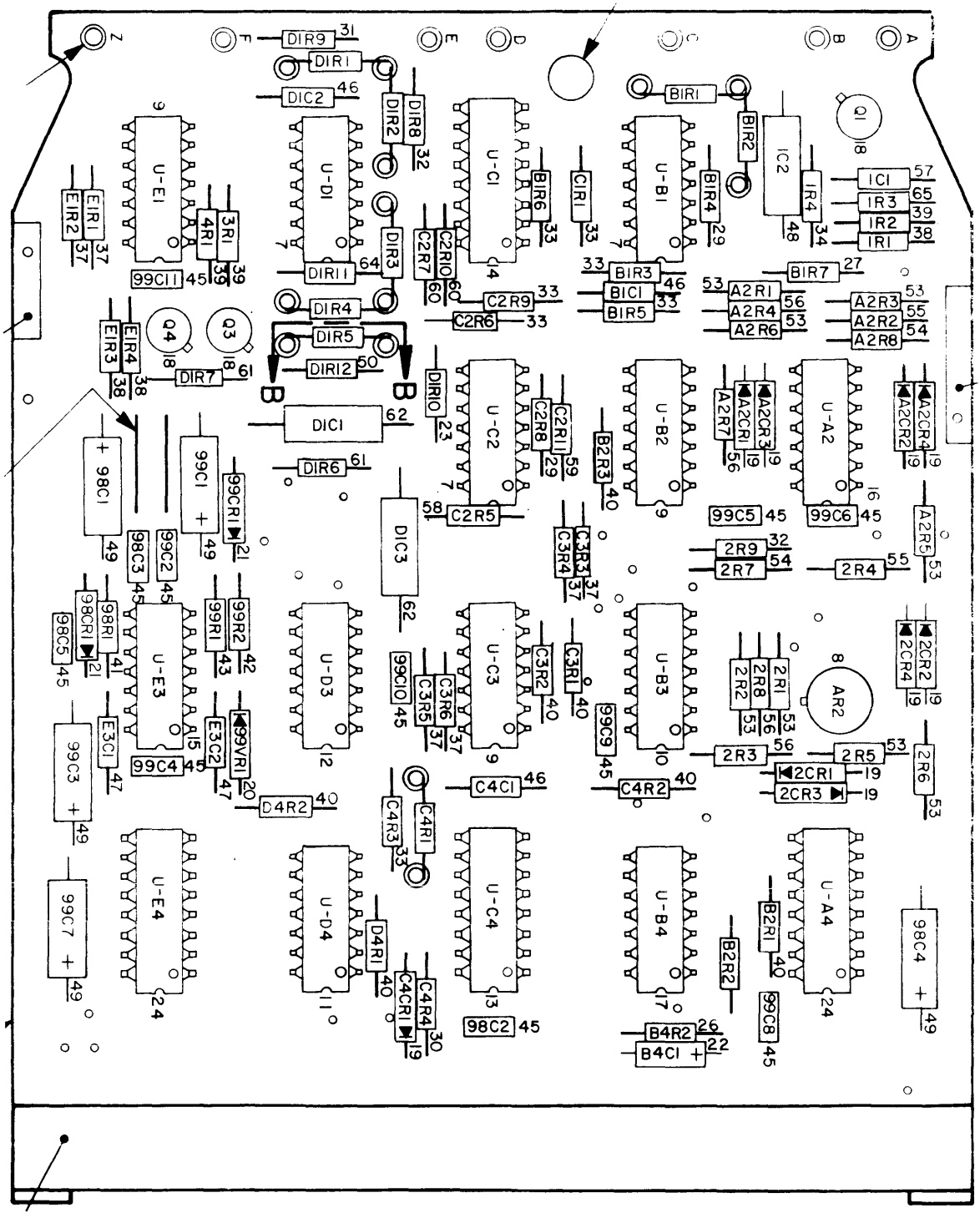

U-E1
U-D1
U-C1
U-B1
IC2
Q1
U-C2
U-B2
U-A2
U-E3
U-D3
U-C3
U-B3
AR2
U-E4
U-D4
U-C4
U-B4
U-A4
Q3
Q4
DIC1
DIC2
DIC3

A2A08 (ELUV)

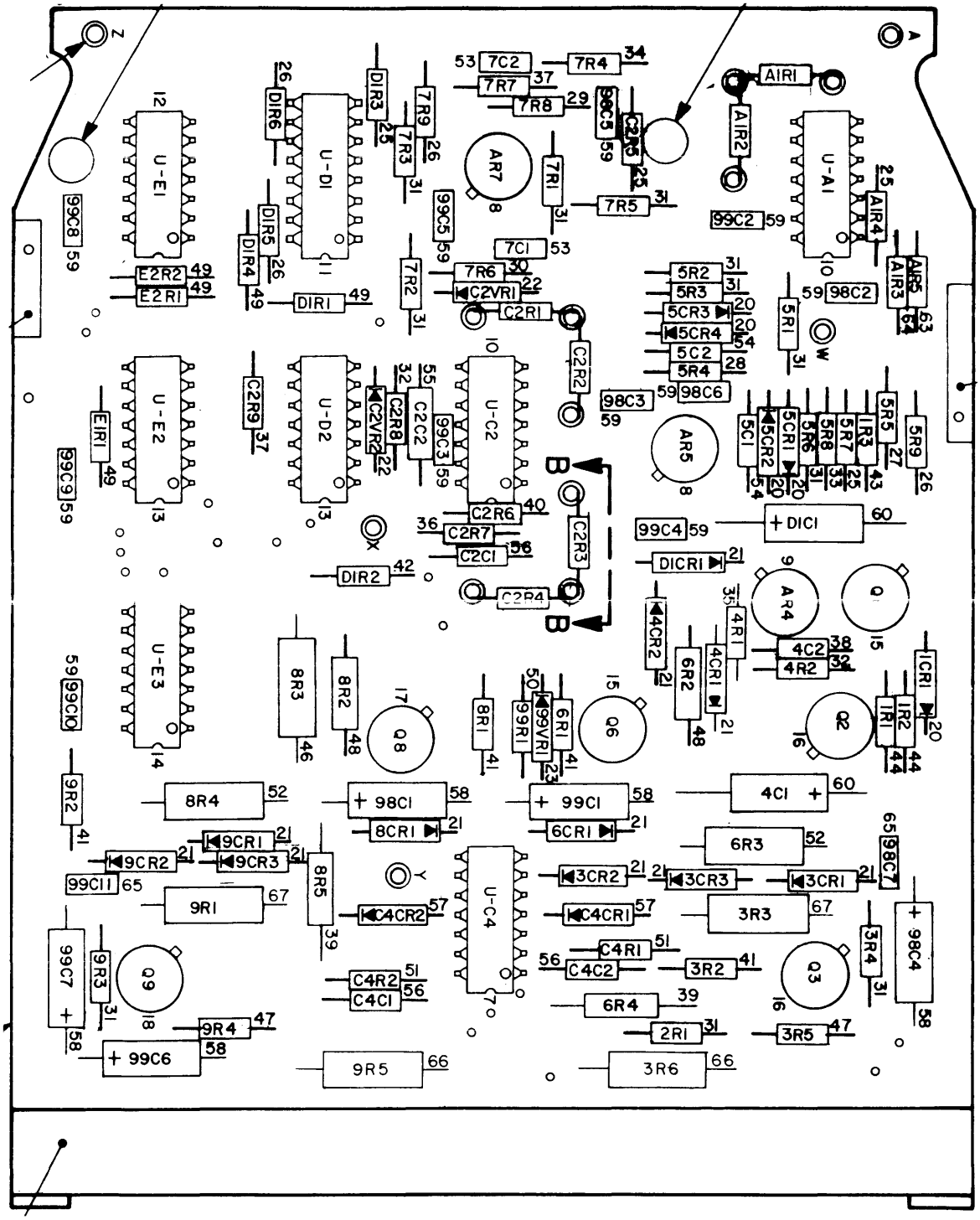
A2A09 (FLPV)

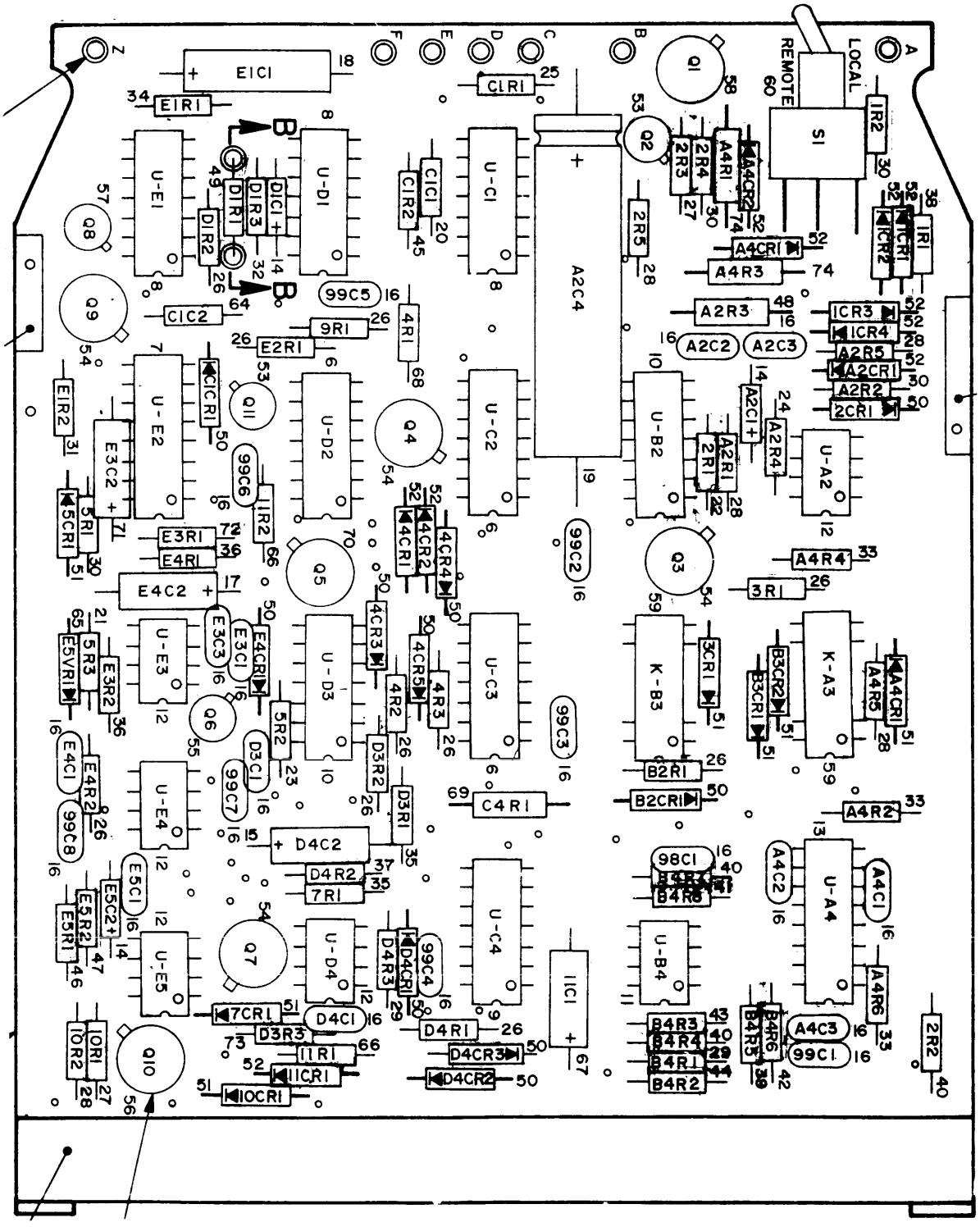
REMOTE
LOCAL
S1
A2C4
U-E1
U-D1
U-C1
U-B2
U-A2
U-E2
U-D2
U-C2
U-E3
U-D3
U-C3
K-B3
K-A3
U-E4
U-D4
U-C4
U-B4
U-A4
U-E5
Q1
Q2
Q3
Q4
Q5
Q6
Q7
Q8
Q9
Q10
Q11
E1C1
C1R1
E1R1
C1C1
C1R2
D1C1
D1R3
D1R1
D1R2
2R3
2R4
A4R1
A4CR2
A4CR1
A4R3
2R5
1R2
1CR2
1CR1
1R1
A2R3
1CR3
1CR4
A2R5
A2CR1
A2R2
2CR1
A2C2
A2C3
A2C1
A2R4
2R1
A2R1
99C5
C1C2
9R1
4R1
E2R1
C1CR1
E1R2
E3C2
5R1
5CR1
99C6
1R2
E3R1
E4R1
E4C2
4CR1
4CR2
4CR4
99C2
3R
A4R4
E3C3
E4CR1
E5VR1
5R3
E3R2
4CR3
4CR5
4R2
4R3
99C3
3CR1
B3CR2
B3CR1
A4CR1
A4R5
5R2
D3C1
D3R2
D3R1
C4R1
B2R1
B2CR1
A4R2
E4C1
E4R2
99C8
99C7
D4C2
D4R2
7R1
98C1
B4R7
B4R8
A4C2
A4C1
E5C1
E5C2
E5R2
E5R1
7CR1
D3R3
D4C1
D4R3
D4CR1
99C4
D4R1
D4CR3
D4CR2
11C1
B4R3
B4R4
B4R1
B4R2
B4R5
A4C3
99C1
A4R6
2R2
1OR1
1OR2
11R1
11CR1
10CR1

A2A10 (ASGV)

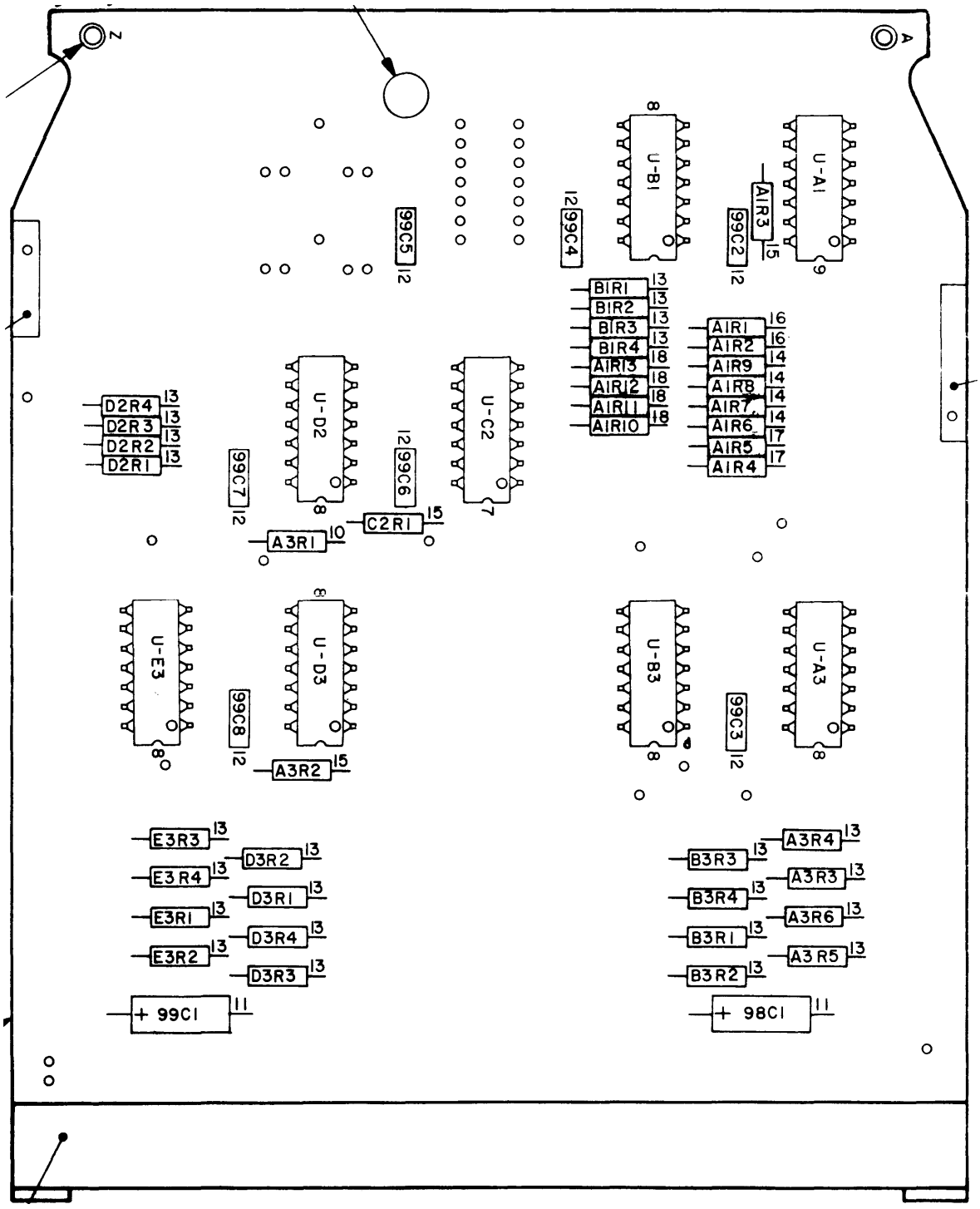
Z
A
U-A1
U-B1
U-C2
U-D2
U-D3
U-E3
U-A3
U-B3
AIR3
99C2
99C4
99C5
BIR1
BIR2
BIR3
BIR4
AIR13
AIR12
AIR11
AIR10
AIR1
AIR2
AIR9
AIR8
AIR7
AIR6
AIR5
AIR4
D2R4
D2R3
D2R2
D2R1
99C7
99C6
C2R1
A3R1
99C8
A3R2
E3R3
E3R4
E3R1
E3R2
D3R2
D3R1
D3R4
D3R3
+ 99C1
B3R3
B3R4
B3R1
B3R2
A3R4
A3R3
A3R6
A3R5
99C3
+ 98C1

A2B01 (HTVV)

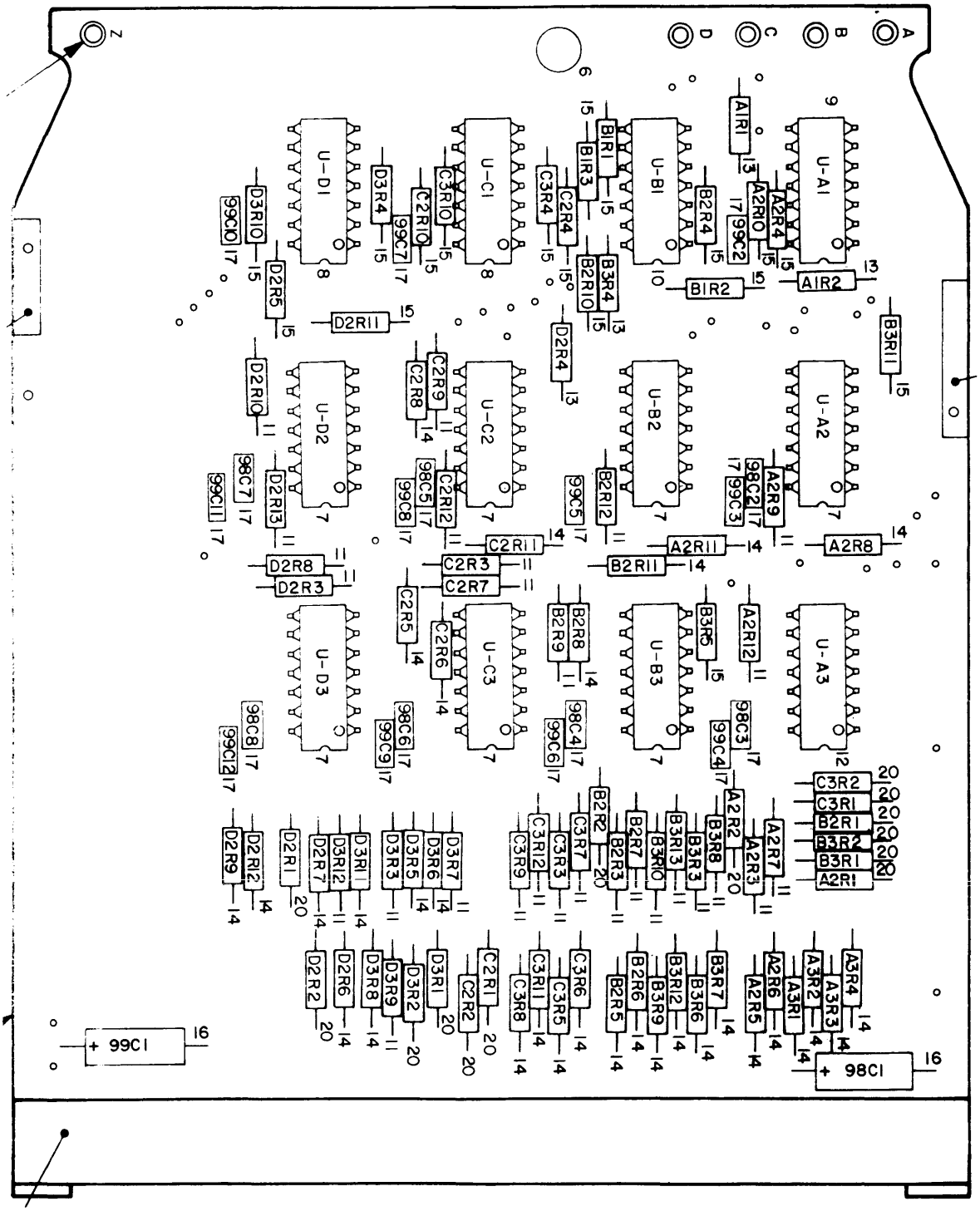
A
B
C
D
Z
U-A1
U-A2
U-A3
U-B1
U-B2
U-B3
U-C1
U-C2
U-C3
U-D1
U-D2
U-D3
A1R1
A1R2
A2R10
A2R4
99C2
A2R9
98C2
99C3
A2R11
A2R8
A2R12
B1R1
B1R3
B1R2
B2R4
B2R10
B3R4
B3R11
B2R12
99C5
B2R11
B2R8
B2R9
B3R5
98C4
99C6
98C3
99C4
C3R4
C2R4
D2R4
C3R10
C2R10
99C7
D3R4
D3R10
99C10
D2R5
D2R11
C2R9
C2R8
C2R12
98C5
99C8
C2R11
C2R3
C2R7
C2R5
C2R6
98C6
99C9
D2R10
99C7
99C11
D2R13
D2R8
D2R3
98C8
99C12
C3R2
C3R1
B2R1
B3R2
B3R1
A2R1
B2R2
C3R7
C3R3
C3R12
C3R9
B2R7
B2R3
B3R10
B3R13
B3R8
B3R3
A2R2
A2R7
A2R3
D3R7
D3R6
D3R5
D3R3
D3R12
D3R1
D2R7
D2R1
D2R12
D2R9
C2R1
C2R2
D3R2
D3R9
D3R8
D3R1
C2R6
D2R6
D2R2
C3R6
C3R5
C3R11
C3R8
B2R6
B3R9
B2R5
B3R12
B3R6
B3R7
A2R6
A2R5
A3R4
A3R3
A3R2
A3R1
98C1
99C1

A2B02 (HRVV)

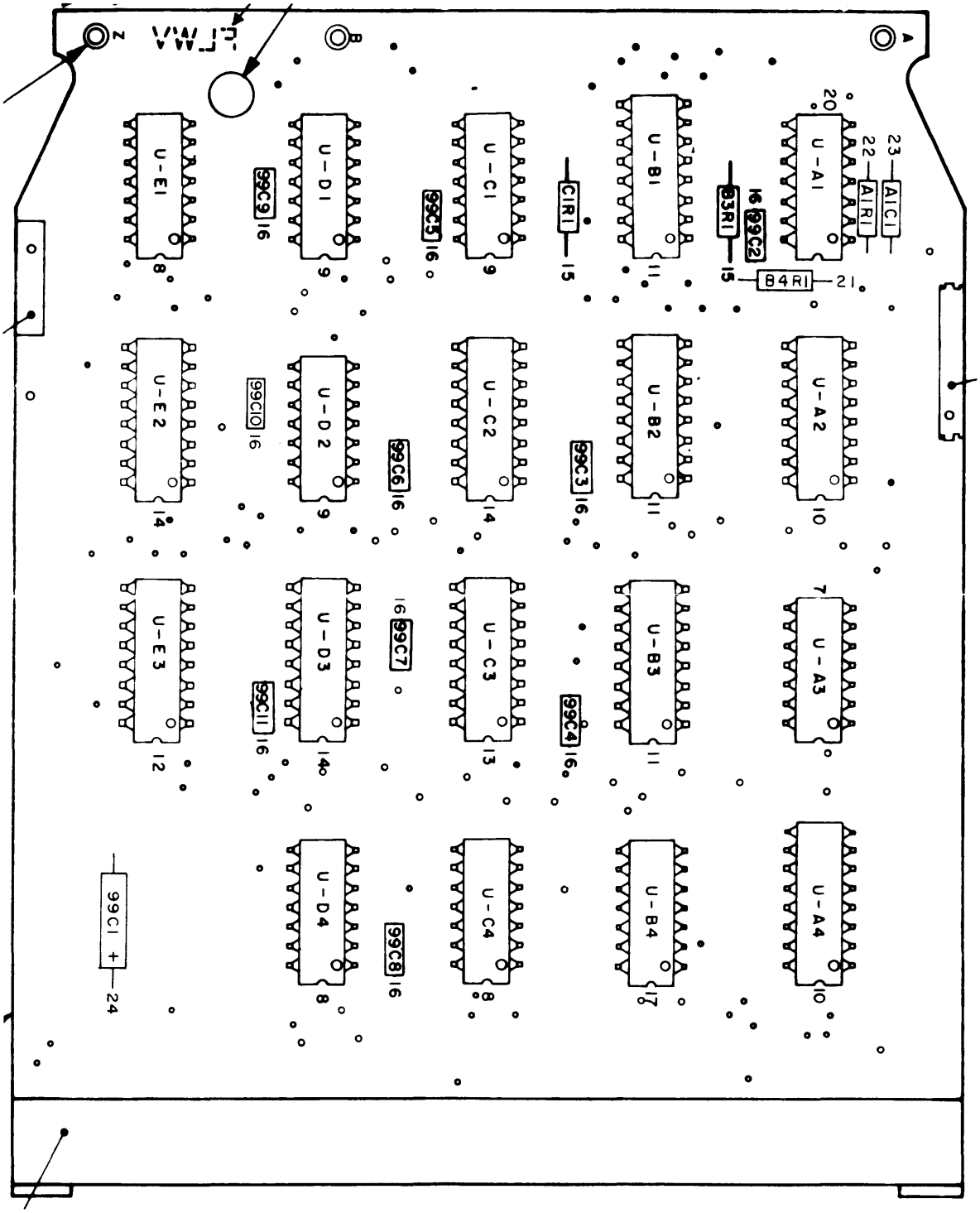
A1C1
A1R1
B3R1
B4R1
C1R1
99C1
99C2
99C3
99C4
99C5
99C6
99C7
99C8
99C9
99C10
99C11
U-A1
U-A2
U-A3
U-A4
U-B1
U-B2
U-B3
U-B4
U-C1
U-C2
U-C3
U-C4
U-D1
U-D2
U-D3
U-D4
U-E1
U-E2
U-E3

A2B06 (FLWV)

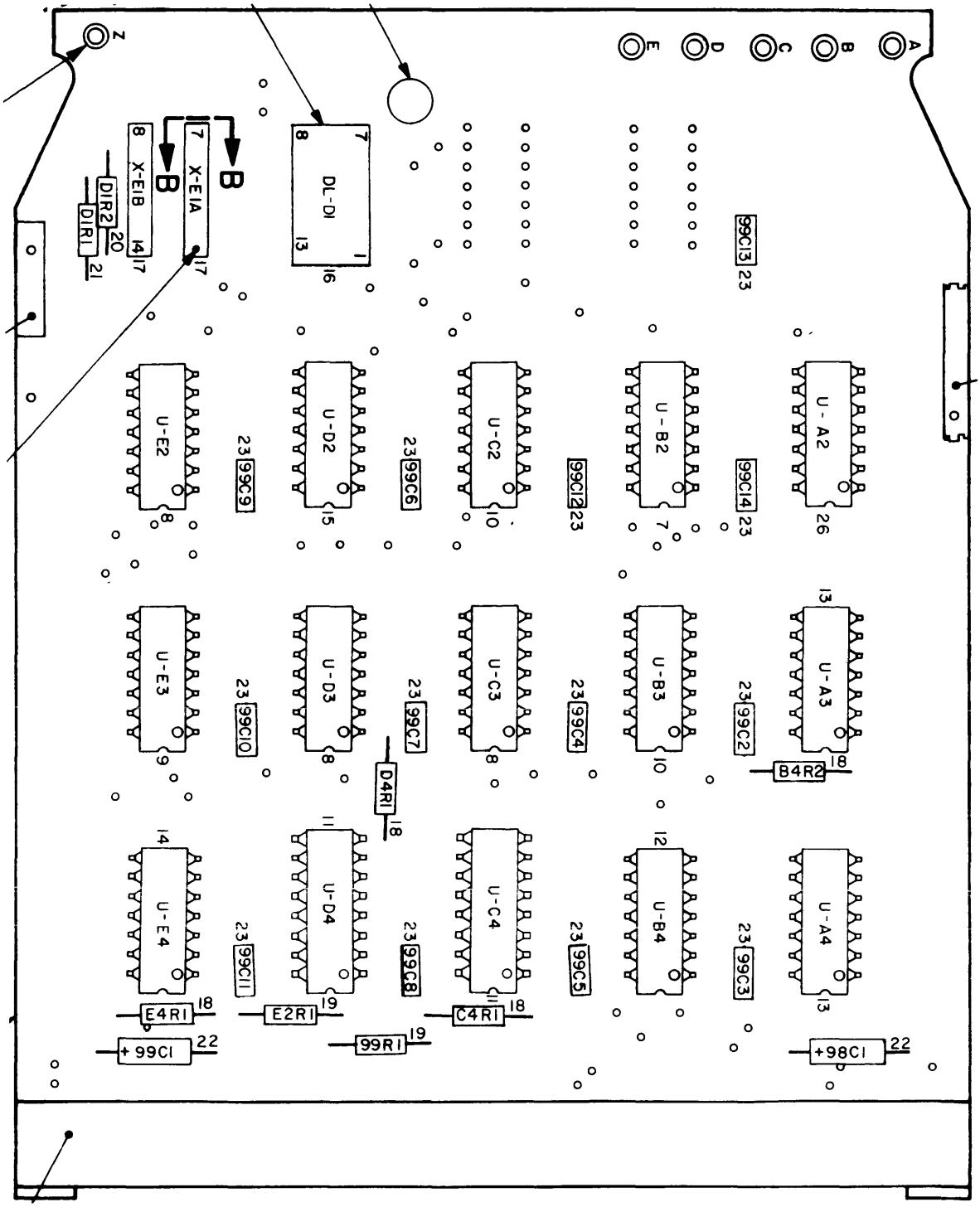
A
B
C
D
E
Z
DL-D1
X-E1A
X-E1B
DIR2
DIR1
U-A2
U-B2
U-C2
U-D2
U-E2
U-A3
U-B3
U-C3
U-D3
U-E3
U-A4
U-B4
U-C4
U-D4
U-E4
99C13
99C14
99C12
99C6
99C9
99C2
99C4
99C7
99C10
99C3
99C5
99C8
99C11
B4R2
D4R1
C4R1
E2R1
E4R1
99R1
+98C1
+99C1

A2B07 (ELXV)

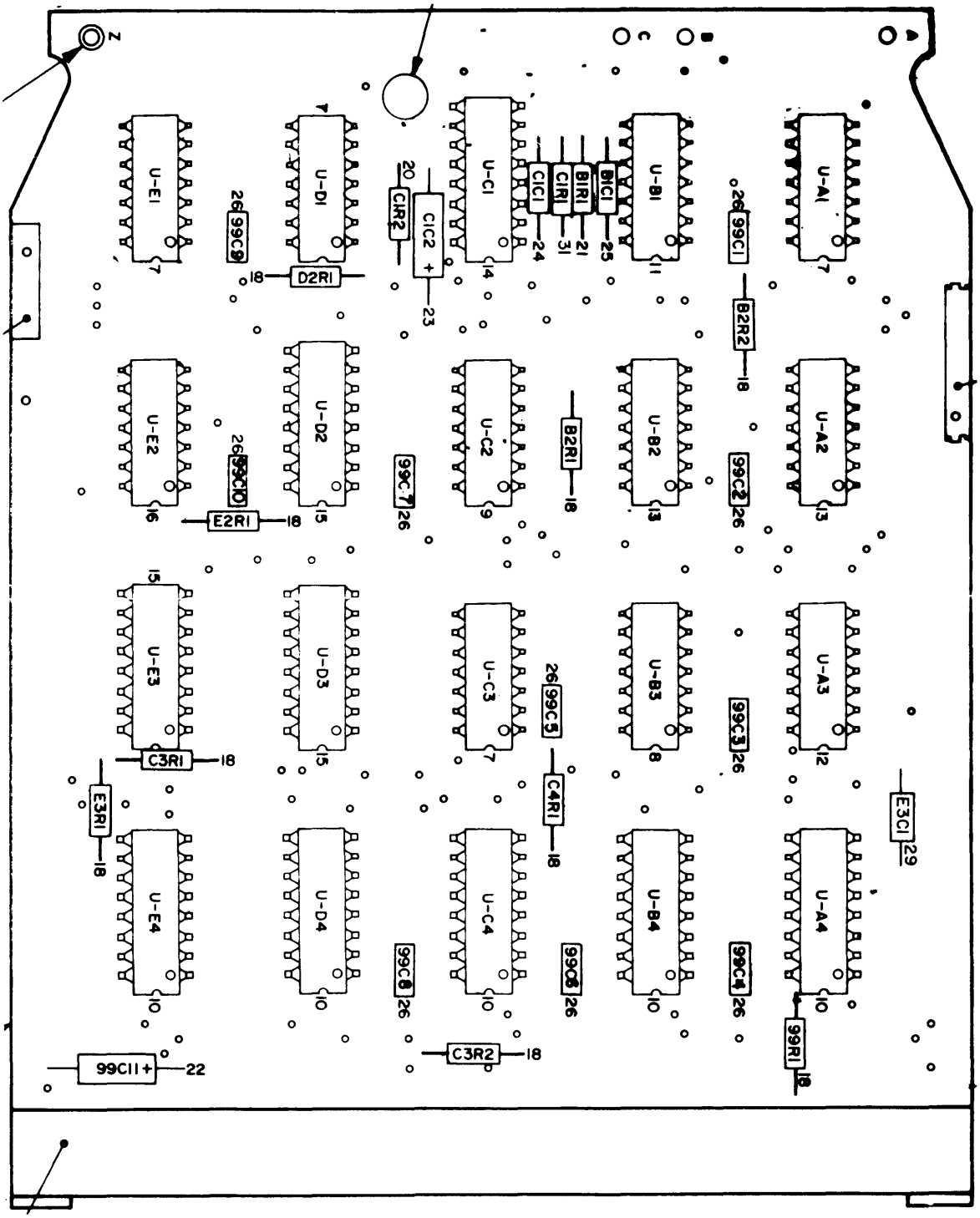
U-A1
U-A2
U-A3
U-A4
U-B1
U-B2
U-B3
U-B4
U-C1
U-C2
U-C3
U-C4
U-D1
U-D2
U-D3
U-D4
U-E1
U-E2
U-E3
U-E4
C1C1
C1R1
B1R1
B1C1
C1R2
C1C2
99C1
99C2
99C3
99C4
99C5
99C6
99C7
99C8
99C9
99C10
99C11
B2R2
B2R1
D2R1
E2R1
C3R1
E3R1
C4R1
C3R2
E3C1
99R1

A2B08 (ELTV)

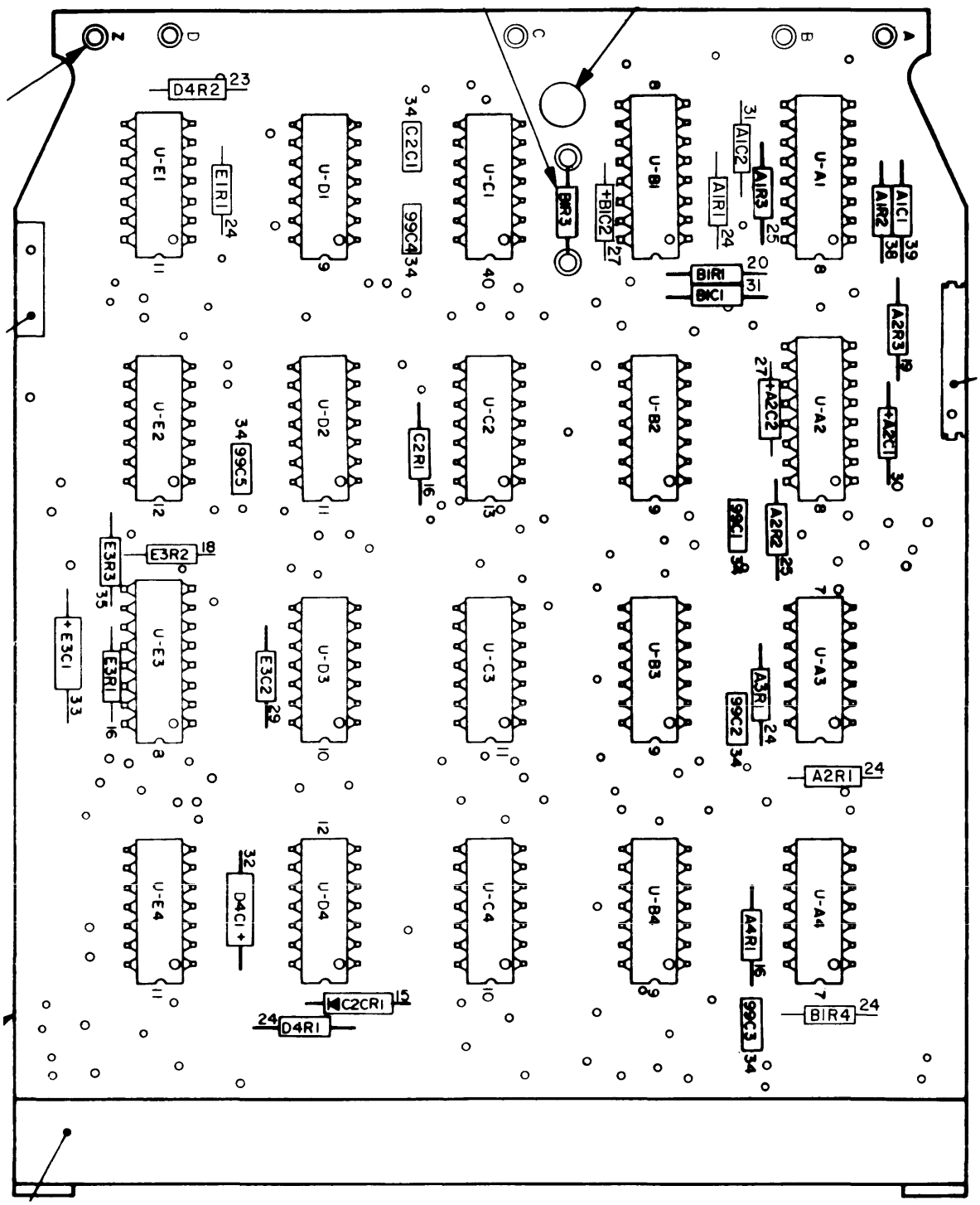
A
B
C
D
Z
U-A1
U-A2
U-A3
U-A4
U-B1
U-B2
U-B3
U-B4
U-C1
U-C2
U-C3
U-C4
U-D1
U-D2
U-D3
U-D4
U-E1
U-E2
U-E3
U-E4
A1C1
A1R2
A1R3
A1C2
A1R1
B1R3
+B1C2
B1R1
B1C1
A2R3
+A2C1
+A2C2
A2R2
A2R1
A3R1
B1R4
A4R1
C2C1
99C4
C2R1
99C5
E1R1
D4R2
E3R3
E3R2
+E3C1
E3R1
E3C2
D4C1+
C2CR1
D4R1
99C1
99C2
99C3

A2B09 (MLVV)

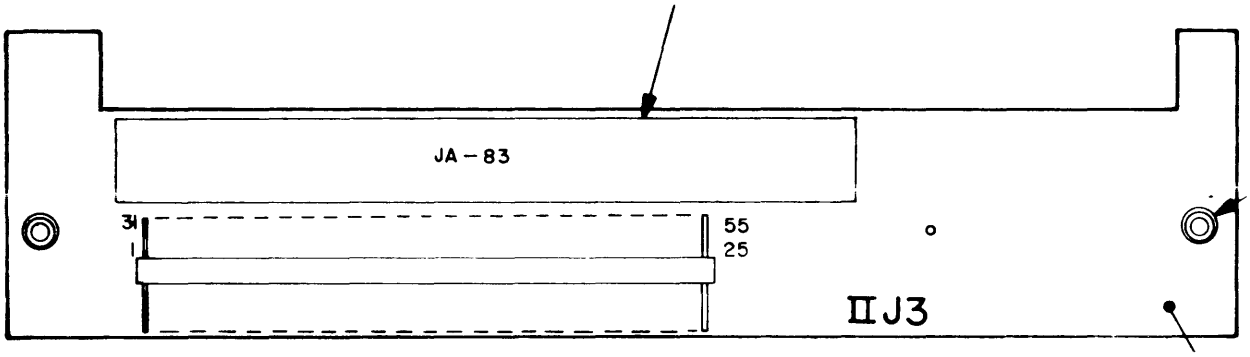

A2C1 (DXYV)

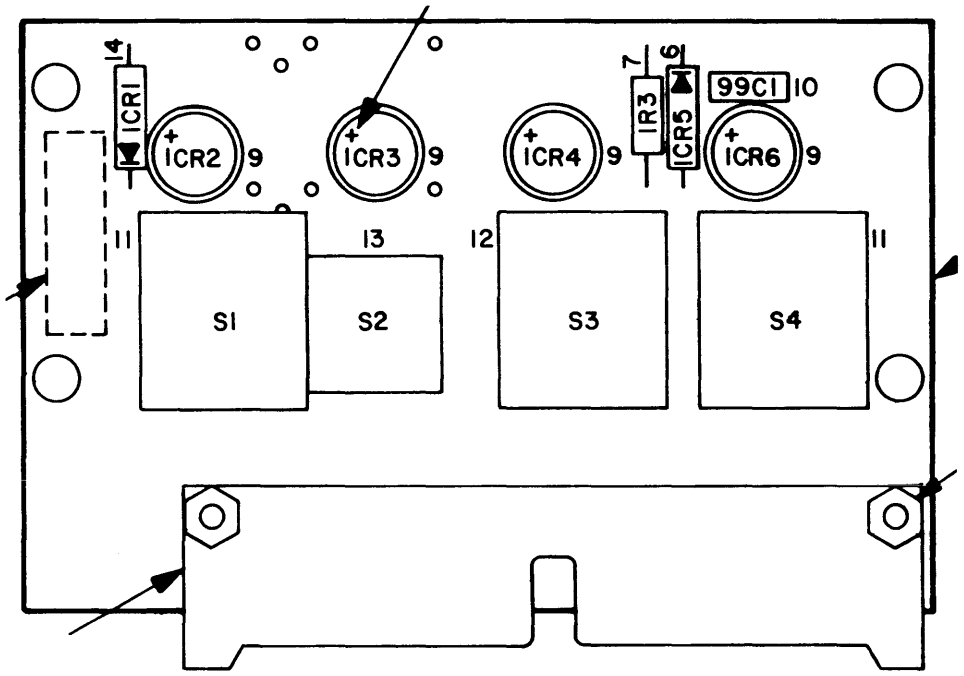
14
1CR1
1CR2
9
1CR3
9
1CR4
9
7
1R3
6
1CR5
99C1
10
1CR6
9
11
13
12
11
S1
S2
S3
S4

A3A01 (HZYN)

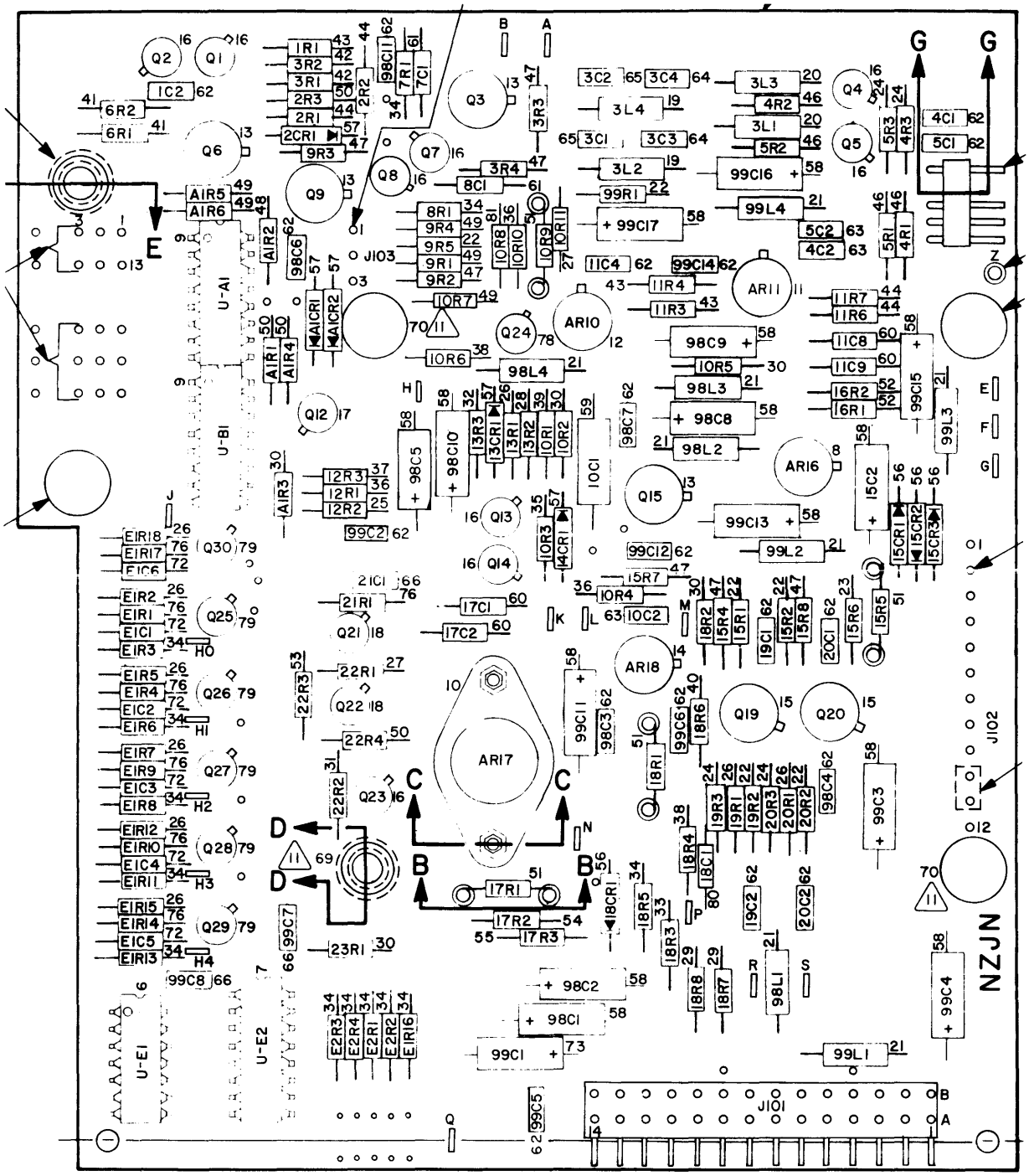
NZJN
U-A1
U-B1
U-E1
U-E2
J101
J102
J103
ARI0
ARI1
ARI6
ARI7
ARI8
Q1
Q2
Q3
Q4
Q5
Q6
Q7
Q8
Q9
Q12
Q13
Q14
Q15
Q19
Q20
Q21
Q22
Q23
Q24
Q25
Q26
Q27
Q28
Q29
Q30

A3A02 (NZJN)

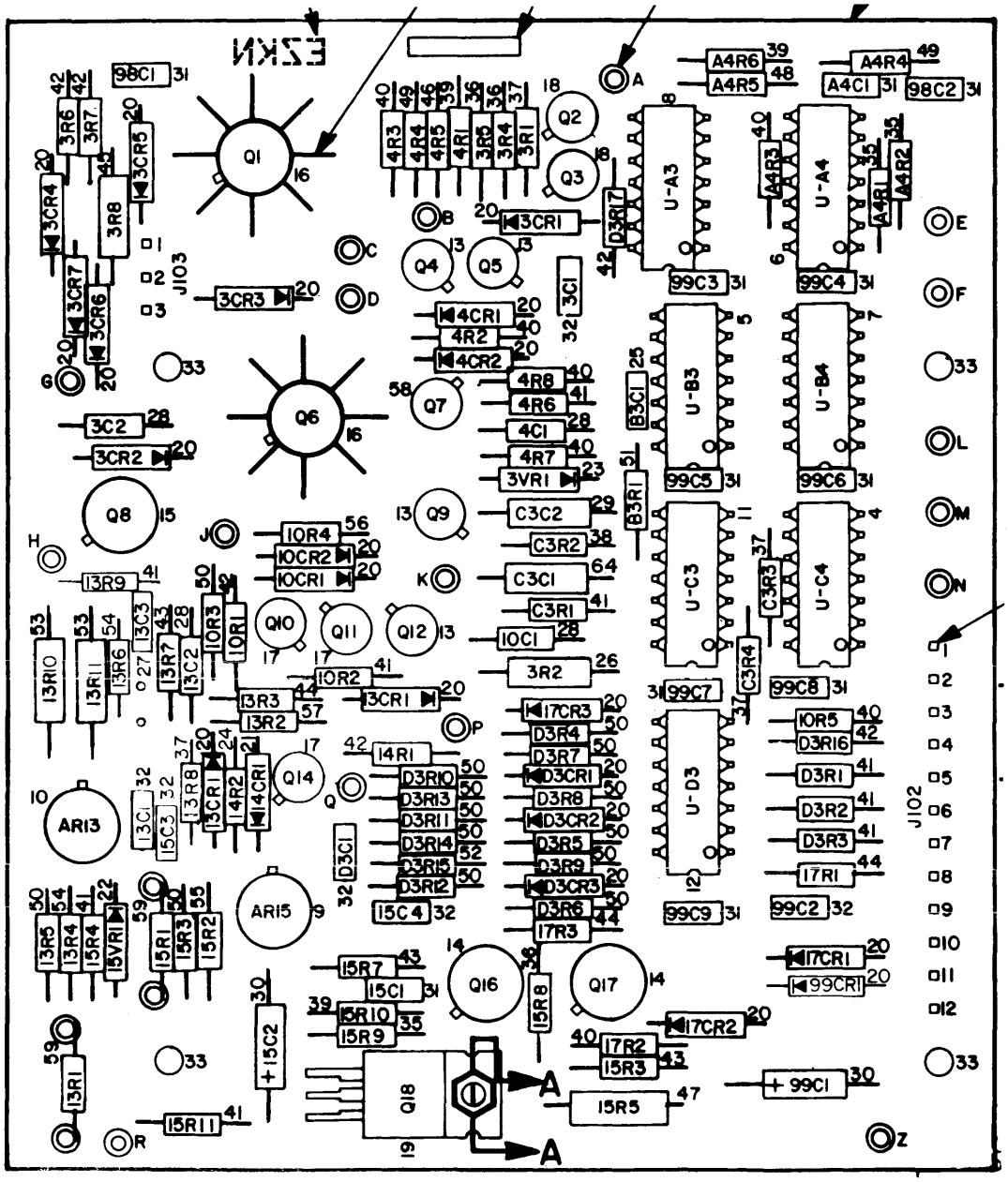
EZKN
Q1
Q2
Q3
Q4
Q5
Q6
Q7
Q8
Q9
Q10
Q11
Q12
Q14
Q16
Q17
Q18
U-A3
U-A4
U-B3
U-B4
U-C3
U-C4
U-D3
J103
J102
98C1
A4R6
A4R5
A4R4
A4C1
98C2
99C3
99C4
99C5
99C6
99C7
99C8
99C9
99C2
99C1
99CR1
3CR1
3CR2
3CR3
3CR4
3CR5
3CR6
3CR7
3R6
3R7
3R8
3C1
3C2
4R1
4R2
4R3
4R4
4R5
4R6
4R7
4R8
4C1
4CR1
4CR2
3VR1
B3C1
B3R1
C3C2
C3R2
C3C1
C3R1
10C1
3R2
C3R4
10R4
10CR2
10CR1
10R3
10R1
10R2
13R9
13R10
13R11
13R6
13C3
13R7
13C2
13R3
13R2
13CR1
13R8
14CR1
14R2
14R1
AR13
13C1
15C3
AR15
13R5
13R4
15R4
15VR1
15R1
15R3
15R2
D3R10
D3R13
D3R11
D3R14
D3R15
D3R12
D3C1
15C4
D3R4
D3R7
D3CR1
D3R8
D3CR2
D3R5
D3R9
D3CR3
D3R6
17R3
15R7
15C1
15R10
15R9
15R8
+15C2
15R11
13R1
17CR3
10R5
D3R16
D3R1
D3R2
D3R3
17R1
17CR1
17CR2
17R2
15R3
15R5
+99C1
A
B
C
D
E
F
G
H
J
K
L
M
N
P
Q
R
Z

A3A03 (EZKN)

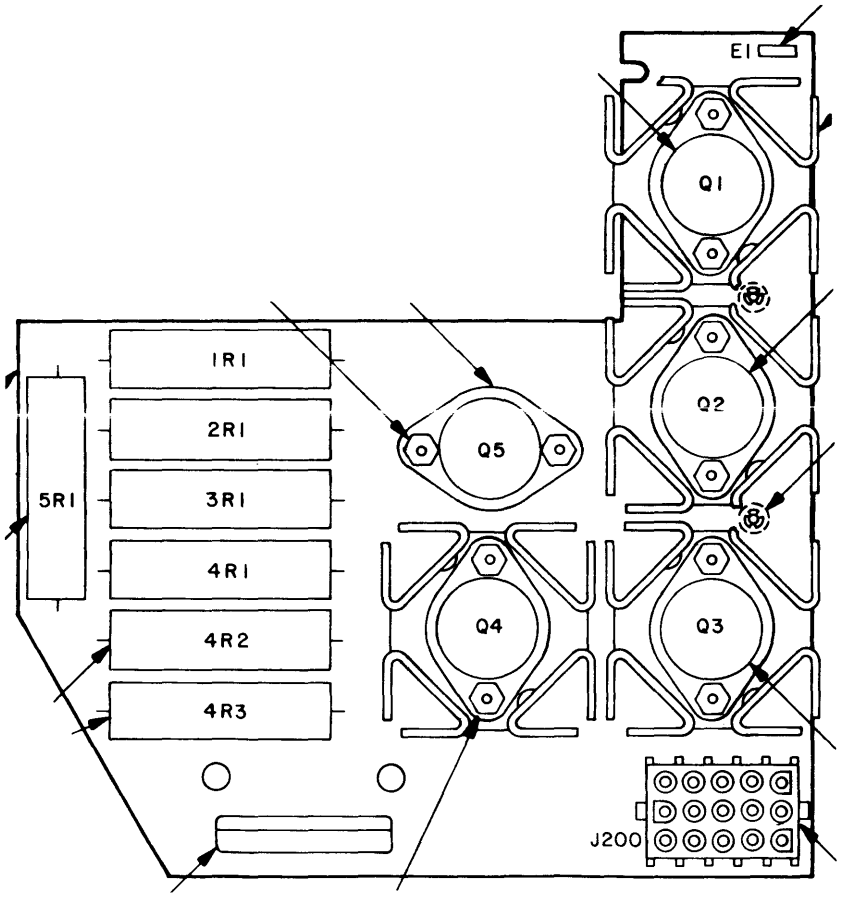

A3A04 (5VTN)

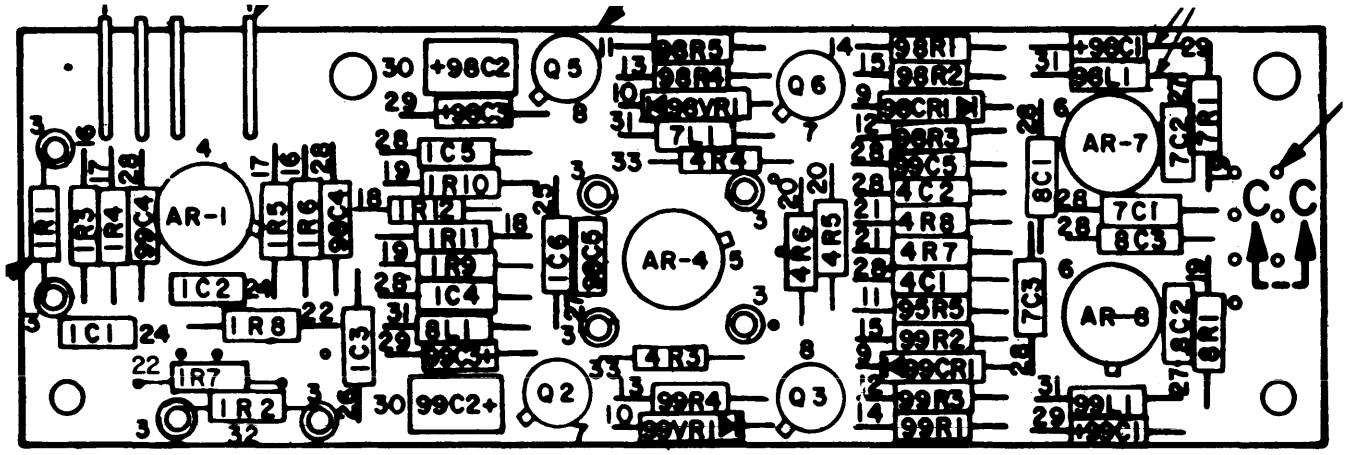
AR-1
AR-4
AR-7
AR-8
Q2
Q3
Q5
Q6
+98C2
+98C3
99C2+
98R5
98R4
98VR1
7L1
4R4
98R1
98R2
98CR1
98R3
99C5
4C2
4R8
4R7
4C1
95R5
99R2
99CR1
99R3
99R1
+98C1
98L1
99L1
+99C1
7C1
8C3
7C2
7R1
8C1
7C3
8C2
8R1
1C5
1R10
1R12
1R11
1R9
1C4
8L1
1C6
98C5
4R6
4R5
4R3
99R4
99VR1
1R1
1R3
1R4
99C4
1R5
1R6
98C4
1C2
1C1
1R8
1C3
1R7
1R2
C
C

A3A05 (FZQN)

RM03 DISK DRIVE MAINTENANCE PRINT SET
ER-0RM03-MP-001

Reader's Comments

Your comments and suggestions will help us in our continuous effort to improve the quality and usefulness of our publications.

What is your general reaction to this manual? In your judgment is it complete, accurate, well organized, well written, etc.? Is it easy to use? _____

_____

_____

_____

What features are most useful? _____

_____

_____

_____

What faults or errors have you found in the manual? _____

_____

_____

_____

Does this manual satisfy the need you think it was intended to satisfy? _____

Does it satisfy *your* needs? _____ Why? _____

_____

_____

_____

☐ Please send me the current copy of the *Technical Documentation Catalog*, which contains information on the remainder of DIGITAL's technical documentation.

Name _____ Street _____
Title _____ City _____
Company _____ State/Country _____
Department _____ Zip _____

Additional copies of this document are available from:

Digital Equipment Corporation
444 Whitney Street
Northboro, Ma 01532
Attention: Communications Services (NR2/M15)
Customer Services Section

Order No. ER-0RM03-MP-001

— — — — — — — — — — — — Fold Here — — — — — — — — — — — —

— — — — — — — — — — Do Not Tear - Fold Here and Staple — — — — — — — — —

FIRST CLASS
PERMIT NO. 33
MAYNARD, MASS.

BUSINESS REPLY MAIL
NO POSTAGE STAMP NECESSARY IF MAILED IN THE UNITED STATES

Postage will be paid by:

Digital Equipment Corporation
Technical Documentation Department
Maynard, Massachusetts 01754