DEC-11-HTCA-D

TC11
DECtape system
engineering drawings

DIGITAL EQUIPMENT CORPORATION • MAYNARD, MASSACHUSETTS

Copyright © 1971 by Digital Equipment Corporation

The material in this manual is for informational purposes and is subject to change without notice.

The following are trademarks of Digital Equipment Corporation, Maynard, Massachusetts:

DEC	PDP
FLIP CHIP	FOCAL
DIGITAL	COMPUTER LAB

TC11 ENGINEERING DRAWINGS

Drawing	Sheets	Description
A-ML-TC11-0	2	DECtape Control Master List
D-UA-TC11-0-0	3	DECtape Control
A-PL-TC11-0-0	1	DECtape Control (Parts List)
D-DI-TC11-0-32	2	Drawing Index List
D-AD-7007048-0-0	1	Wired Assembly
A-PL-7007408-0-0	1	Wired Assembly (Parts List)
D-MU-TC11-0-0	2	Module Utilization
A-PL-TC11-0-01	2	Module Utilization (Parts List)
D-BS-TC11-0-02	1	DECtape Control Control
D-BS-TC11-0-03	1	DECtape Control Errors
D-BS-TC11-0-04	1	DECtape Control TP, UPS, Motion Control
D-BS-TC11-0-05	1	DECtape Control
D-BS-TC11-0-06	1	RWB and LPB
D-BS-TC11-0-07	1	Mark Track Decoder
D-BS-TC11-0-08	1	NPR Control
D-BS-TC11-0-09	1	Register Control
D-BS-TC11-0-10	1	Slave Response & Maintenance Bits
D-BS-TC11-0-11	1	Command Register
D-BS-TC11-0-12	1	TU56 Connections
D-BS-TC11-0-13	1	Unibus Drivers and Receivers
D-BS-TC11-0-14	1	Data Register 1
D-BS-TC11-0-15	1	Data Register 2
D-BS-TC11-0-16	1	Data Register 3
D-BS-TC11-0-17	1	Output Gating 1
D-BS-TC11-0-18	1	Output Gating 2
D-BS-TC11-0-19	1	Address Selection & Interrupt Control
D-IC-TC11-0-20	1	Bus Connectors
D-BS-TC11-0-21	1	Bus Address Register (TCBA)
D-BS-TC11-0-22	1	Word Count Register (TCWC)
D-BS-TC11-0-23	1	TC11 Control Panel
D-BS-TC11-0-24	1	DECtape Timing
D-BS-TC11-0-25	1	TC11 Slave Response
D-BS-TC11-0-26	1	Ready and Error Sequence
D-BS-TC11-0-27	1	NPR Transfer – DATI
D-TD-TC11-0-28	1	NPR Transfer – DATO
K-WL-TC11-0-30 (complete)	1	Wire List
C-CS-M105-0-1	1	Address Selector
D-CS-M228-0-1	1	Mark Track Decoder
D-CS-M239-0-1	1	Three 4-Bit Counter/Registers
D-CS-M7820-0-1	1	Interrupt Control Module
B-CS-M783-0-1	1	Unibus Transmitter
D-CS-M795-0-1	1	Word Count & Bus Address Register
D-CS-M796-0-1	1	Unibus Master Control
C-CS-M798-0-1	1	Unibus Drivers
B-CS-G879-0-1	1	Transport Detector
B-CS-G888-0-1	1	Manchester Read/Write Amplifier
B-CS-854-0-1	1	Power Control

This drawing and specifications, herein, are the property of Digital Equipment Corporation and shall not be reproduced or copied or used in whole or in part as the basis for the manufacture or sale of items without written permission.

MASTER DRAWING LIST

DWG. NO.	REV. LET.	NO. OF SHEETS	TITLE
D-UA-TC11-Ø-Ø	C	3	DEC TAPE CONTROL
A-PL-TC11-Ø-Ø	C	1	DEC TAPE CONTROL
D-DI-TC11-Ø-32	D	2	DRAWING INDEX LIST (TC11)
D-AD-7ØØ7Ø48-Ø-Ø	A	1	WIRED ASSY
A-PL-7ØØ7Ø48-Ø-Ø	A	1	WIRED ASSY
D-MU-TC11-Ø-Ø1	E	2	MODULE UTILIZATION
A-PL-TC11-Ø-Ø1	E	2	MODULE UTILIZATION
D-BS-TC11-Ø-Ø2	C	1	DECTAPE CONTROL CONTROL
D-BS-TC11-Ø-Ø3	B	1	DECTAPE CONTROL ERRORS
D-BS-TC11-Ø-Ø4	A	1	DECTAPE CONT TP, UPS, MOTION CONT
D-BS-TC11-Ø-Ø5	A	1	DECTAPE CONTROL
D-BS-TC11-Ø-Ø6	A	1	RWB AND LPB
D-BS-TC11-Ø-Ø7		1	MARK TRACK DECODER
D-BS-TC11-Ø-Ø8	C	1	NPR CONTROL
D-BS-TC11-Ø-Ø9		1	REGISTER CONTROL
D-BS-TC11-Ø-1Ø	B	1	SLAVE RESP AND MAINT BITS
D-BS-TC11-Ø-11	A	1	COMMAND REGISTER
D-BS-TC11-Ø-12	C	1	TU56 CONNECTIONS
D-BS-TC11-Ø-13		1	UNIBUS DRIVER AND RECEIVERS
D-BS-TC11-Ø-14		1	DATA REGISTER 1
D-BS-TC11-Ø-15		1	DATA REGISTER 2
D-BS-TC11-Ø-16		1	DATA REGISTER 3
D-BS-TC11-Ø-17	A	1	OUTPUT GATING 1
D-BS-TC11-Ø-18		1	OUTPUT GATING 2
D-BS-TC11-Ø-19	C	1	ADDR SEL AND INT CONT
D-IC-TC11-Ø-2Ø		1	BUS CONNECTORS
D-BS-TC11-Ø-21	A	1	BUS ADDRESS REGISTER (TCBA)
D-BS-TC11-Ø-22	A	1	WORD COUNT REGISTER (TCWC)
D-BS-TC11-Ø-23		1	TC11 CONTROL PANEL
D-TD-TC11-Ø-24		1	DECTAPE TIMING
D-TD-TC11-Ø-25		1	TC11 SLAVE RESPONSE
D-TD-TC11-Ø-26		1	READY AND ERROR SEQUENCE

REVISIONS			
REV.	DATE	CHG. NO.	APP'D.
A	1/5/71	00002	P.J.
B	1/71	00003	P.J.
C	2/71	00004	P.J.
D	5/71	00006	P.J.
E	9/71	00007	A.V.
F	11/71	00009	P.J.
H	11/71	00008	P.J.
J	4/72	00010	P.J.
K	5/72	00011	P.J.
L	5/72	00012	P.J.

DRN. MACKENZIE	DATE 10/24/7	digital EQUIPMENT CORPORATION MAYNARD, MASSACHUSETTS
CHK'D. MACKENZIE	DATE 10/29/70	
ENG.	DATE	TITLE DECTAPE CONTROL
PROJ. ENG.	DATE	
PROD. Call	DATE 11/3/70	
FIRST USED ON PDP-11		SIZE A · CODE ML · NUMBER TC11-Ø · REV. L
SCALE		
SHEET 1 OF 3		DIST.

DEC FORM NO.16-1033
DRA 103

manufacture or sale of items without written permission.

MASTER DRAWING LIST

DWG. NO.	REV. LET.	NO. OF SHEETS	TITLE
D-TD-TC11-Ø-27		1	NPR TRANSFER DATI
D-TD-TC11-Ø-28		1	NPR TRANSFER DATO
~~D-AD-TC11-Ø-29~~	~~A~~	~~1~~	~~MAX CONFIGURATION (TC11)~~
K-WL-TC11-Ø-30 *	F	1	WIRE LIST
A-SP-TC11-0-33		20	ENGINEERING SPECIFICATION
A-SP-TC11-0-34	REF	4	TC11 TEST PROCEDURE
A-SP-TC11-0-35	REF	3	TC11/TU56 IN HOUSE ACCEPTANCE TEST
A-AL-TC11-0-36		1	TC11 ACCESSARY LIST
A-SL-TC11-0-37		1	TC11 SOFTWARE LIST

* PRINT THE COMPLETE WIRELIST

REVISIONS			
REV.	DATE	CHG. NO.	APP'D.

DRN. MACKENZIE	DATE 10/29/7	digital EQUIPMENT CORPORATION MAYNARD, MASSACHUSETTS
CHK'D. MACKENZIE	DATE 10/29/70	
ENG.	DATE 11/	TITLE DECTAPE CONTROL
PROJ. ENG.	DATE 11/3/	
PROD. Call	DATE 11/3/70	
FIRST USED ON PDP-11		SIZE A · CODE ML · NUMBER TC11-Ø · REV. L
SCALE		
SHEET 2 OF 3		DIST.

DEC FORM NO.16-1033
DRA 103

ADDITIONAL CUSTOMER PRINTS

Drawing Number	Rev. Let	Title
D-CS-M796-0-1	A	UNIBUS MASTER CONTROL
D-CS-M795-0-1	A	WC AND CMA MODULE
C-CS-M798-0-1		UNIBUS DRIVERS
B-CS-M783-0-1		UNIBUS DRIVERS
D-CS-M228-0-1		MARK TRACK DECODER
D-CS-M239-0-1		THREE "4" BIT CONVERTER REGISTER
B-CS-854-0-1	A	POWER CONTROL
B-CS-G879-0-1		TRANSPORT DETECTOR
D-CS-M7821-0-1		INTERRUPT CONTROL

Rev.	Date	Change Number
L	5-31-72	TC11-00012

Paul E. Janson 11-25-70
Requested by Date

Paul E. Janson 11-25-70
Authorized by Date

This drawing and specifications, herein, are the property of Digital Equipment Corporation and shall not be reproduced or copied or used in whole or in part as the basis for the manufacture or sale of items without written permission.

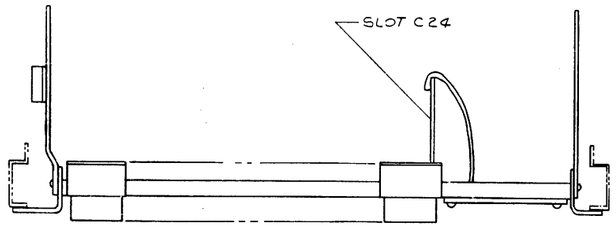

VIEW A-A

QTY.	DESCRIPTION	PART NO.	ITEM NO.
	PARTS LIST		

FIRST USED ON OPTION/MODEL: PDP11

DO NOT SCALE DRAWING

UNLESS OTHERWISE SPECIFIED
DIMENSION IN INCHES
TOLERANCES
~~[illegible]~~ ANGLES ± 0°30'
FINAL SURFACE QUALITY ✓
REMOVE BURRS AND BREAK SHARP CORNERS

MATERIAL

FINISH

DRN.	[signature]	DATE 10-27-70
CHK'D.	[signature]	DATE 10/29/70
ENG.	[signature]	DATE 10/29/70
PROJ. ENG.	[signature]	DATE 10/29/70
PROD.	[signature]	DATE 10/30/70

NEXT HIGHER ASSY: A-ML-TC11-Ø

SCALE: NONE

SHEET 1 OF 3

digital EQUIPMENT CORPORATION
MAYNARD MASSACHUSETTS

TITLE: DEC TAPE CONTROL (TC11)

SIZE	CODE	NUMBER	REV.
D	UA	TC11-Ø-Ø	C

DIST.

REVISIONS

CHK	CHANGE NO.	REV.
[illegible]	TC11-00002	A
	JANSON	
	TC11-00009	B
	P. JANSON	
	TC11-00012	C
	JANSON	

DEC FORM NO. DPD 100

This drawing and specifications, herein, are the property of Digital Equipment Corporation and shall not be reproduced or copied or used in whole or in part as the basis for the manufacture or sale of items without written permission.

PDP-11 BLANK LOGO
D-IA-7407936-1

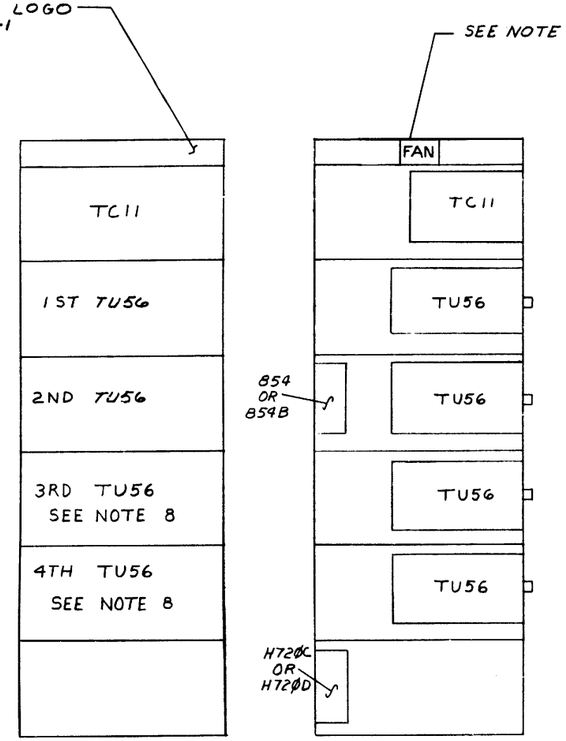

H950 CAB.
FRONT

H950 CAB
(SIDE)

NOTES:

1. FOR SYSTEM WIRING INFORMATION SEE SHEET # 3
2. REMOVE FEMALE PLUG FROM POWER CORD (#120265) & ATTACH (2) SOLDERLESS CONN #50364 ARKLESS (9007928) & (1) SOLDERLESS CONN #50325 ARKLESS (9007927) TO GND WIRE. GND WIRE IS ATTACHED TO TERMINAL STRIP MOUNTING SCREW.
3. REMOVE MALE PLUG FROM POWER CORD (120265) & ATTACH (3) SOLDERLESS CONN #50368 ARKLESS (9007926).
4. ATTACH #50906 ARKLESS (9007919) TO RED & WHITE TWISTED PAIR, ONE END IS ATTACHED TO 854 OUTPUT & THE OTHER END TO THE DISTRIBUTION BAR.
5. REMOVE MALE PLUG FROM POWER CORD (120265) & ATTACH (2) SOLDERLESS CONN #50906 ARKLESS (9007919), 1 SOLDERLESS CONN. #56325 ARKLESS (9007927) TO GND WIRE WHICH IS ATTACHED UNDERNEATH NEAREST SCREW HEAD.
6. USE ONE FAN FOR 110V SYSTEMS. CONNECT TWO FANS IN SERIES FOR 220V SYSTEMS.
7. H720 AND 854 ARE BACK-DOOR MOUNTED.
8. OPTIONALLY CAN BE "SELF-CONTAINED UNITS" SUCH AS BA11 OR RC11. INSTALL FIRST IN LOWEST POSITION AND EXPAND UP. TU56'S EXPAND DOWN.

REVISIONS
REV. | CHANGE NO. | BY
C | THIS DWG WAS D-AR-TC11-0-29 | CHK

DEC FORM NO. DRU 580

FIRST USED ON OPTION/MODEL

DO NOT SCALE DRAWING
UNLESS OTHERWISE SPECIFIED
DIMENSION IN INCHES
TOLERANCES
DECIMALS ± .005 | FRACTIONS ± 1/64 | ANGLES ± 0°30'
FINAL SURFACE QUALITY
REMOVE BURRS AND BREAK SHARP CORNERS

MATERIAL

FINISH

QTY.	DESCRIPTION	PART NO.	ITEM NO.
PARTS LIST			

DRN. G Hendrix	DATE 12/23/70	
CHK'D. R. Cook	DATE 2/26/71	
ENG. L Gibson	DATE 1/5/71	
PROJ. ENG. G. Hendrix	DATE 12/28/70	
PROD. K Hall	DATE 1/5/71	

NEXT HIGHER ASSY

SCALE

SHEET 2 OF 3

digital EQUIPMENT CORPORATION
MAYNARD, MASSACHUSETTS

TITLE
DEC TAPE CONTROL (TC11)

SIZE	CODE	NUMBER	REV.
D	UA	TC11-0-0	C

DIST. (4)

REV C
SIZE D | CODE UA | NUMBER TC11-0-0

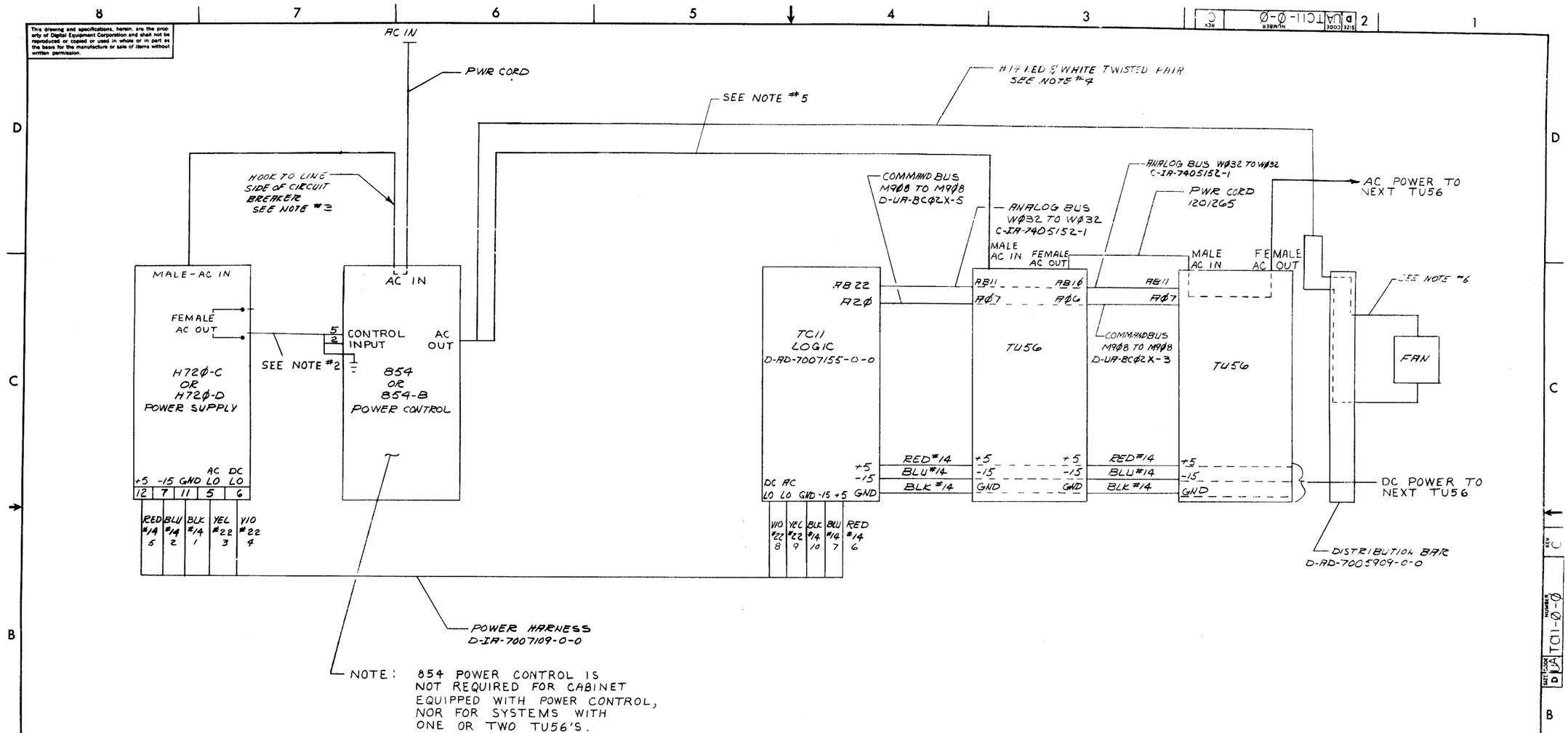

This drawing and specifications, herein, are the property of Digital Equipment Corporation and shall not be reproduced or copied or used in whole or in part as the basis for the manufacture or sale of items without written permission.

QTY.	DESCRIPTION	PART NO.	ITEM NO.
	PARTS LIST		

FIRST USED ON OPTION/MODEL

DO NOT SCALE DRAWING
UNLESS OTHERWISE SPECIFIED DIMENSION IN INCHES
TOLERANCES
DECIMALS ± .005 FRACTIONS ± 1/64 ANGLES ± 0°30'
FINAL SURFACE QUALITY
REMOVE BURRS AND BREAK SHARP CORNERS

MATERIAL

FINISH

DRN. DATE
CHK'D. DATE
ENG. DATE
PROJ. ENG. DATE
PROD. DATE

NEXT HIGHER ASSY

SCALE
SHEET 3 OF 3

digital EQUIPMENT CORPORATION
MAYNARD, MASSACHUSETTS

TITLE
DEC TAPE CONTROL (TC11)

SIZE D CODE UA NUMBER TC11-0-0 REV.

DIST.

REVISIONS
CHK | CHANGE NO. | REV.
THIS DWG WAS D-AR-TC11-0-29

DEC FORM NO. DRD 100

DIGITAL EQUIPMENT CORPORATION
MAYNARD, MASSACHUSETTS

PARTS LIST

MADE BY R. ROBICHAUD	CHECKED J. FLEMING	SECTION
DATE 10-22-70	DATE 10-26-70	1
ENG [illegible]	PROD [illegible]	ISSUED SECT.
DATE 10/29/70	DATE 10/30/70	1

ITEM NO.	DWG NO./PART NO.	DESCRIPTION	QUANTITY/VARIATION TC11-1	TC11-2
1	D-AD-7007155-0-0	LOGIC ASSY (TC11)	1	1
2	9006073-1	SCR PHL HD PAN #10-32 X ½ SST	20	20
3	9007786	SPEED NUT #C31758-032-27 TINN.	20	20
4	9007651	WASH EXT TOOTH #10	20	20
5	D-IA-7007109-0-0	POWER HARNESS	1	1
6	D-UA-854-Ø-Ø	POWER CONTROL 854 (120V) *	A/R	0
7	D-UA-854-B-Ø	POWER CONTROL 854 B (240V) *	0	A/R
8	D-UA-H72Ø-C-Ø	POWER SUPPLY H720-C (120V)	1	0
9	D-UA-H72Ø-D-Ø	POWER SUPPLY H720-D (240V)	0	1
10	D-AD-7005909-0-0	DISTRIBUTION PANEL ASSY	1	1
11	D-UA-H95Ø-Q-Ø	19 IN COVER PANEL (10½)	1	1
12	D-UA-BC11A-8-Ø	CABLE BC11A	1	1
13	D-MAD-1945-19-1	1945 HOLD DOWN BAR	1	1
14	C-~~SC12~~09856-Ø-Ø	MODULE HOLDER	6	6
15	H-850	EXT HANDLE	1	1
16	C-PL-7006501-23-0	BASIC CAB ASSY - 19"	1	1
17	A-PL-H752-C-Ø	FAN	0	1
*	854 IS NOT REQUIRED	FOR SYSTEMS WITH 1 OR 2 TU56'S, NOR		
	FOR CABINETS EQUIPPED	WITH POWER CONTROLS.		

TITLE	ASSY NO.	SIZE	CODE	NUMBER	REV.	ECO NO.
DECTAPE CONTROL (TC11)	D-UA-TC11-Ø-Ø	A	PL	TC11-Ø-Ø	C	TC11-00012
	SHEET 1 OF 1	DIST.	G			

DEC FORM NO.16-1031
DRA 110

This drawing and specifications, herein, are the property of Digital Equipment Corporation and shall not be reproduced or copied or used in whole or in part as the basis for the manufacture or sale of items without written permission.

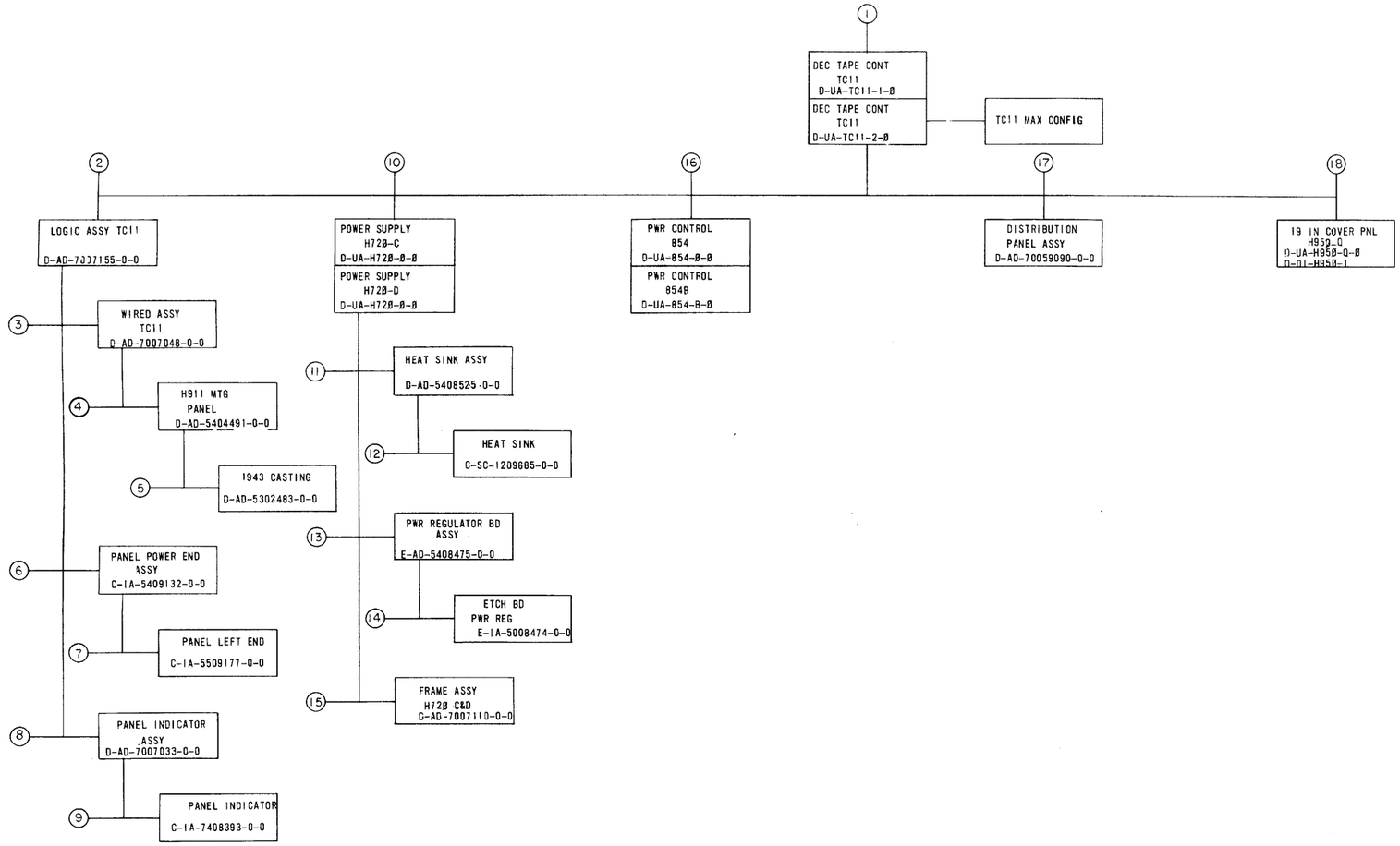

QTY.	DESCRIPTION	PART NO.	ITEM NO.
	PARTS LIST		

FIRST USED ON OPTION/MODEL: TC11

DO NOT SCALE DRAWING

UNLESS OTHERWISE SPECIFIED
DIMENSION IN INCHES
TOLERANCES
DECIMALS ± .005 FRACTIONS ± 1/64 ANGLES ± 0°30'
FINAL SURFACE QUALITY ✓
REMOVE BURRS AND BREAK SHARP CORNERS

MATERIAL —"—

FINISH —"—

DRN. [signature] DATE 1/27/70
CHK'D. [signature] DATE 1/29/70
ENG. [signature] DATE 1/2/70
PROJ. ENG. DATE
PROD. [signature] DATE 1/30/70

NEXT HIGHER ASSY: A-ML-TC11-0

SCALE —"—

SHEET 1 OF 2

digital EQUIPMENT CORPORATION
MAYNARD, MASSACHUSETTS

TITLE: DRAWING INDEX LIST (TC11)

SIZE D | CODE DI | NUMBER TC11-0-32 | REV. D

DIST.

REVISIONS

CHK	CHANGE NO.	REV.
af	TC11-00002	A
	JANSON	
	TC11-00004	B
	JANSON	
	TC11-00007	C
	P. JANSON	
	TC11-00009	D
	P. JANSON	

DEC FORM NO. DRD 100

This drawing and specifications, herein, are the property of Digital Equipment Corporation and shall not be reproduced or copied or used in whole or in part as the basis for the manufacture or sale of items without written permission.

MECHANICAL

FIND NO.	DESCRIPTION	PART NO.	DEPT USAGE PROD	CUST	F/C
1.	DEC TAPE CONTROL	D-UA-TC11-1-0			
	DEC TAPE CONTROL	D-UA-TC11-2-0			
	DEC TAPE CONTROL (P.L.)	A-PL-TC11-0-0			
	POWER HARNESS	D-IA-7007109-0-0			
2.	LOGIC ASSY TC11	D-AD-7007155-0-0			
	LOGIC ASSY (P.L.)	A-PL-7007155-0-0			
	PANEL RIGHT END	C-MD-5302485-0-0			
3.	WIRED ASSY TC11	D-AD-7007048-0-0			
	WIRED ASSY (P.L.)	A-PL-7007048-0-0			
	LOGIC FRAME DECALS	A-DC-7406371-0-0			
4.	H911 MTG PANEL	D-AD-5404491-0-0			
	H911 MTG PANEL (P.L.)	A-PL-5404491-0-0			
	288 PIN CONN BLOCK #H803	E-SC-1205348-0-0			
5.	1943 CASTING	D-AD-5302483-0-0			
	1943 CASTING (P.L.)	A-PL-5302483-0-0			
	1943 FRAME CASTING	E-MD-1202885-0-0			
6.	PANEL, POWER END ASSY	C-IA-5409132-0-0			
7.	PANEL, LEFT END	C-IA-5509177-0-0			
	SILK SCREEN	A-SS-5509177-0-1			
8.	PANEL INDICATOR ASSY	D-AD-7007033-0-0			
	PANEL INDICATOR (P.L.)	A-PL-7007033-0-0			
9.	PANEL INDICATOR	C-IA-7408393-0-0			
	SILK SCREEN	B-SS-7408393-0-1			
10.	PWR SUPPLY H720-C	D-UA-H720-C-0			
	PWR SUPPLY H720-D	D-UA-H720-D-0			
	PWR SUPPLY (P.L.)	A-PL-H720-0-0			
	PWR SUPPLY CHASSIS	E-IA-5308519-0-0			
	PWR SUPPLY COVER	C-MD-5308518-0-0			
	BRKT SUPPORT	C-MD-5303521-0-0			
	CAPACITOR BRKT	D-MD-5308520-0-0			
	PWR SUPPLY DECALS	B-DC-5308524-0-0			
	PWR SUPPLY DECALS (120V)	A-DC-5308771-0-0			
	PWR SUPPLY DECALS (240V)	A-DC-5308772-0-0			
11.	HEAT SINK ASSY	D-AD-5408525-0-0			
	HEAT SINK ASSY (P.L.)	A-PL-5408525-0-0			
	COIL, TRANSFORMER	C-SC-1609762-0-0			
12.	HEAT SINK	C-SC-1209385-0-0			
	HEAT SINK BUSHING	A-SC-1209475-0-0			
13.	PWR REGULATOR BD. ASSY	E-AD-5408475-0-0			
	PWR REGULATOR BD. ASSY (P.L.)	A-PL-5408475-0-0			
	HEAT SINK	B-MD-5308733-0-0			
	X-Y CORRDINATE HOLE LOCATION	K-CO-5408475-0-4			
	ASSY/DRILLING HOLE LAYOUT	AH-5408475-0-5			
14.	ETCH BOARD PWR REG.	E-IA-5008474-0-0			
	ASSY/DRILLING HOLE LAYOUT	AH-5408475-0-5			
	PRINTED CIRCUIT LAYOUT	PC-5008474			
15	FRAME ASSY H720 C&D	D-AD-7007110-0-0			
	FRAME ASSY H720 C&D (P.L.)	A-PL-7007110-0-0			
	CHASSIS PWR SUPPLY	D-IA-7408392-0-0			
	SCREEN, FAN	C-MD-7404881-0-0			

MECHANICAL

FIND NO.	DESCRIPTION	PART NO.	DEPT USAGE PROD	CUST	F/C
16.	PWR CONTROL ASSY (854)	D-UA-854-0-0			
	PWR CONTROL ASSY (P.L.)	A-PL-854-0-0			
	PWR CONTROL ASSY (854-B)	D-UA-854-B-0			
	PWR CONTROL ASSY (P.L.)	A-PL-854-B-0			
	CHASSIS	D-MD-5308148-0-0			
	PLEXI GLASS SHEILD	C-MD-5308149-0-0			
	DECALS 854 PWR CONT	B-DC-5308425-0-0			
	DECALS 854-B PWR CONT	B-DC-5308426-0-0			
17.	DISTRIBUTION PANEL ASSY	D-AD-7005909-0-0			
	DISTRIBUTION PANEL ASSY (P.L.)	A-PL-7005909-0-0			
	PANEL BACK DISTRIBUTION	C-MD-7406765-0-0			
	PANEL DISTRIBUTION	D-IA-7406764-0-0			
	DECALS DISTRIBUTION PANEL	A-DC-7406766-0-0			
18.	19 IN COVER PANEL	D-UA-H959-0-0			
	19 IN COVER PANEL	A-PL-H959-0-0			
	DRAWING INDEX LIST (H959)	D-DI-H959-0-1			

ELECTRICAL

FIND NO.	DESCRIPTION	PART NO.	DEPT USAGE PROD	CUST	F/C
1.	DEC TAPE CONTROL	A-ML-TC11-0			
	DEC TAPE CONTROL	D-UA-TC11-0-0			
	DEC TAPE CONTROL	A-PL-TC11-0-0			
	MODULE UTILIZATION	D-MU-TC11-0-01			
	MODULE UTILIZATION	A-PL-TC11-0-01			
	DECTAPE CONTROL CONTROL	D-BS-TC11-0-02			
	DECTAPE CONTROL ERRORS	D-BS-TC11-0-03			
	DECTAPE CONT TP, UPS, MOTION CONT	D-BS-TC11-0-04			
	DECTAPE CONTROL	D-BS-TC11-0-05			
	RWB AND LPB	D-BS-TC11-0-06			
	MARK TRACK DECODER	D-BS-TC11-0-07			
	NPR CONTROL	D-BS-TC11-0-08			
	REGISTER CONTROL	D-BS-TC11-0-09			
	SLAVE RESP AND MAINT BITS	D-BS-TC11-0-10			
	COMMAND REGISTER	D-BS-TC11-0-11			
	TU56 CONNECTIONS	D-BS-TC11-0-12			
	UNIBUS DRIVERS AND RECEIVERS	D-BS-TC11-0-13			
	DATA REGISTER 1	D-BS-TC11-0-14			
	DATA REGISTER 2	D-BS-TC11-0-15			
	DATA REGISTER 3	D-BS-TC11-0-16			
	OUTPUT GATING 1	D-BS-TC11-0-17			
	OUTPUT GATING 2	D-BS-TC11-0-18			
	ADDR SEL AND INT CONT	D-BS-TC11-0-19			
	BUS CONNECTORS	D-IC-TC11-0-20			
	BUS ADDRESS REGISTER (TCBA)	D-BS-TC11-0-21			
	WORD COUNT REGISTER (TCWC)	D-BS-TC11-0-22			
	TC11 CONTROL PANEL	D-BS-TC11-0-23			
	DECTAPE TIMING	D-TD-TC11-0-24			
	TC11 SLAVE RESPONSE	D-TD-TC11-0-25			
	READY AND ERROR SEQUENCE	D-TD-TC11-0-26			
	NPR TRANSFER DATI	D-TD-TC11-0-27			
	NPR TRANSFER DATO	D-TD-TC11-0-28			
	WIRE LIST	K-WL-TC11-0-30			
	ENGINEERING SPECIFICATION	A-SP-TC11-0-33			
	TC11 TEST PROCEDURE	A-SP-TC11-0-34			
	TC11/TU56 IN HOUSE ACCEPTANCE TEST	A-SP-TC11-0-35			
	ACCESSORY LIST	A-AL-TC11-0-36			
	SOFTWARE LIST	A-SL-TC11-0-37			
3.	WIRED ASSY	D-AD-7007048-0-0			
	WIRED ASSY	A-PL-7007048-0-0			

ELECTRICAL

FIND NO.	DESCRIPTION	PART NO.	DEPT USAGE PROD	CUST	F/C

REV D

SIZE D | CODE DI | NUMBER TC11-0-32

FIRST USED ON OPTION/MODEL: TC11

		DATE
DRN.	G. Hawkins	10/27/76
CHK'D.	C. Cook	10/29/76
ENG.		DATE
PROJ. ENG.		DATE
PROD.	K. Call	11/8/76

NEXT HIGHER ASSY: H-ML-TC11-0

SCALE: 1=1

SHEET: 1 OF 1

digital EQUIPMENT CORPORATION, MAYNARD, MASSACHUSETTS

TITLE: DRAWING INDEX LIST (TC11)

SIZE D | CODE DI | NUMBER TC11-0-32 | REV. D

DIST.

REVISIONS: REV | CHANGE NO | CHK

This drawing and specifications, herein, are the property of Digital Equipment Corporation and shall not be reproduced or copied or used in whole or in part as the basis for the manufacture or sale of items without written permission.

WIRE TABLE				
ITEM NO	DESCRIPTION AWG	COLOR	FROM CONNECTION	TO CONNECTION
5	24	BLUE	A21B2	B21B2
5	24	BLUE	B24B2	C24V2
8	24	RED	AØ1A2	BØ1A2
8	24	RED	CØ1A2	DØ1A2
8	24	RED	BØ1A2	CØ1A2
8	24	RED	A A2	B24A2
8	24	RED	C24A2	D24A2
8	24	RED	B24A2	C24A2

NOTES:

1. CONNECTIONS ON ITEM NUMBER 1 & 2 TO BE LOCATED AND SOLDERED AT MINIMUM PRACTICAL HEIGHT ABOVE BLOCKS.
2. ALL CONNECTOR BLOCKS TO BE GROUNDED TO GROUND LUGS AS SHOWN, 4 PLACES
3. USE YELLOW WIRE (ITEM #4) FOR MACHINE WRAPPED AND BLUE WIRE (ITEM #5) FOR HAND WRAPPED WIRING.

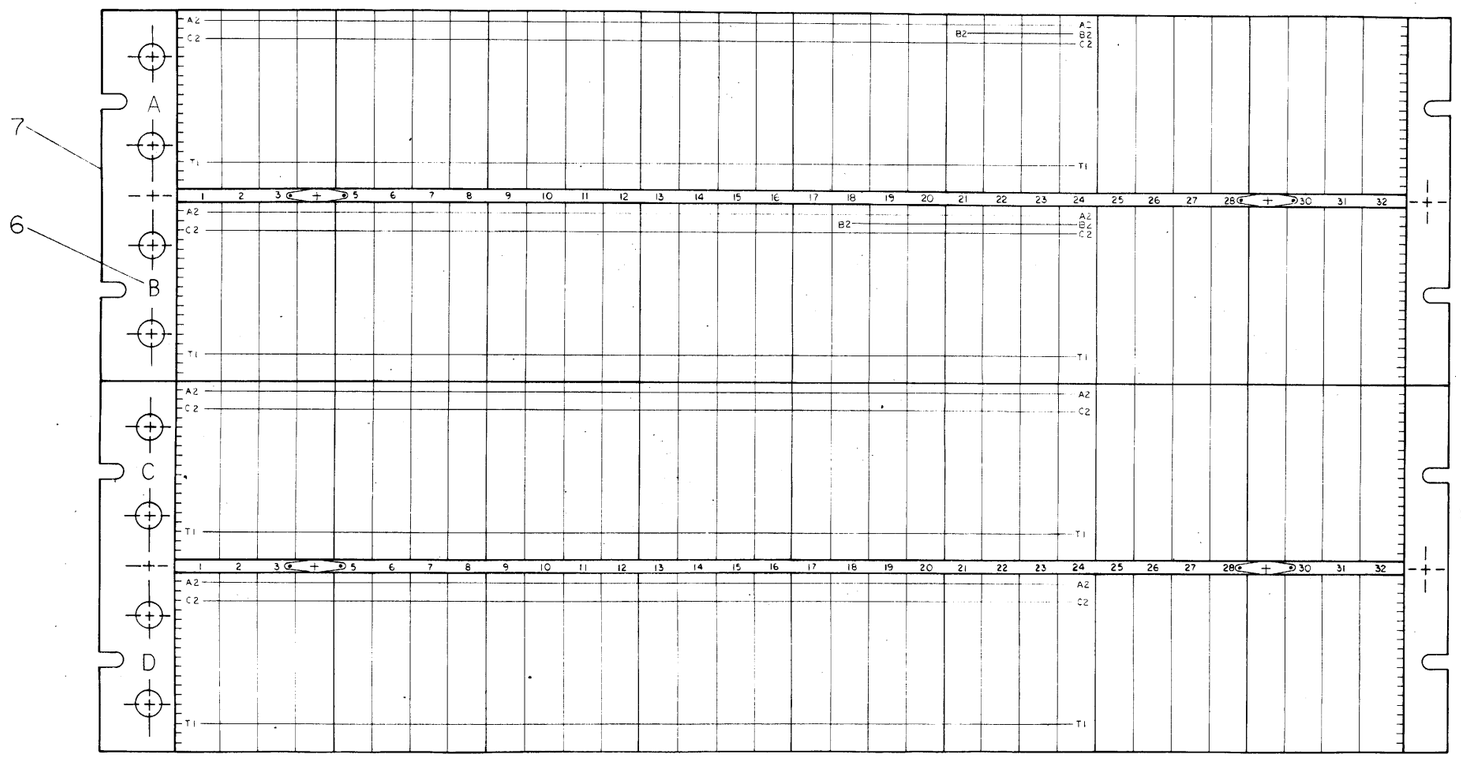

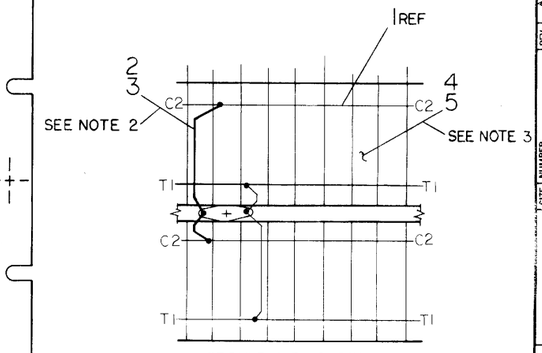

GROUND WIRING DETAIL
TYPICAL

FIRST USED ON OPTION/MODEL	QTY.	DESCRIPTION	PART NO.	ITEM NO.
PDP-11		PARTS LIST		

DO NOT SCALE DRAWING

UNLESS OTHERWISE SPECIFIED DIMENSION IN INCHES
TOLERANCES
DECIMALS ± .005 FRACTIONS ± 1/64 ANGLES ± 0°30'
FINAL SURFACE QUALITY
REMOVE BURRS AND BREAK SHARP CORNERS

MATERIAL

FINISH

DRN. T. Chalada DATE 11/3/70
CHK'D. [illegible] DATE 11/3/70
ENG. DATE
PROJ. ENG. DATE
PROD. [illegible] DATE 11/3/70
NEXT HIGHER ASSY
SCALE NONE
SHEET OF

digital EQUIPMENT CORPORATION
MAYNARD, MASSACHUSETTS

TITLE
WIRED ASS'Y
TC11

SIZE D CODE AD NUMBER 7007048-00 REV. A
DIST.

REVISIONS

CHK	CHANGE NO.	REV.
[illegible]	TC11-C0002	A

JANSON [illegible] 2-12-71

DEC FORM NO. DRD 117

DIGITAL EQUIPMENT CORPORATION
MAYNARD, MASSACHUSETTS

PARTS LIST

MADE BY KAREN KRYSIAK	CHECKED M. MACKENZIE	SECTION
DATE 9-9-70	DATE 10-29-70	1
ENG	PROD	ISSUED SECT.
DATE	DATE 11/3/70	1

ITEM NO.	DWG NO. / PART NO.	DESCRIPTION	QUANTITY / VARIATION
1	1205541	BUS STRIP	A/R
2	9107560-Ø1	22 AWG BUS WIRE	A/R
3	9107265-Ø9	#22 TUBING, TEFLON, WHITE	A/R
4	9105740-44	30 AWG SOLID TEF INS. WIRE, YELLOW	A/R
5	9107470-66	24 AWG SOLID TEF INS. WIRE, BLUE	A/R
6	A-DC-7406371-0-0	LOGIC FRAME DECALS	A/R
7	D-AD-5404491-0-0	H911 MTG PANEL	2
8	9107470-22	24 AWG SOLID TEF INS. WIRE, RED	A/R
REF	K-WL-TC11-Ø-30	WIRE LIST	1

TITLE	ASSY NO.	SIZE	CODE	NUMBER	REV.	ECO NO.
WIRED ASSY	D-AD-7ØØ7Ø48-Ø-3	A	PL	7ØØ7Ø48-Ø-Ø	A	TC11-00002
	SHEET 1 OF 1	DIST.				

DEC FORM NO.16-1031
DRA 110

This drawing and specifications, herein, are the property of Digital Equipment Corporation and shall not be reproduced or copied or used in whole or in part as the basis for the manufacture or sale of items without written permission.

Row	Usage	Slot	Item
A	BC11A	1	UNIBUS CABLE
A	BC11A/M930	2	UNIBUS CABLE/TERM
A	M793	3	
A	M784	4	A1 BUS D00, V1 BUS D14, C1 BUS D01, F2 BUS D03, D1 BUS D02, H2 BUS D05, F1 BUS D04, K2 BUS D07, J1 BUS D06, M2 BUS D09, L1 BUS D08, P2 BUS D11, N1 BUS D10, S2 BUS D13, R1 BUS D12, U2 BUS D15
A	M784	5	B1 BD00, D2 BD01, E1 BD02, F2 BD03, H1 BD04, J2 BD05, K1 BD06, L2 BD07, M1 BD08, N2 BD09, P1 BD10, R2 BD11, S1 BD12, T2 BD13, U1 BD14, V2 BD15
A	M784	6	B1 BD00, D2 BINIT, E1 BSSYN, F2 BSSYN, H1 INT ENB, J2 BDC LO, K1 BD06, L2 BINIT, M1 FCT 2, N2 FCT 3, P1 FCT 1, R2 WRITE OK, S1 RDY ENB, T2 SELECT 0, U1 SELE 0, V2 BD15
A	M795	7	WORD COUNT AND BUS ADDRESS
A	M783	8	E2 OBUS D14, U2 OBUS D08, C1 OBUS D15, K1 BUS SSYN, H2 OBUS D12, N2 BUS A17, K2 OBUS D12, T2 BUS A16, M2 OBUS D11, F2 NU UNIT SELECT, P2 OBUS D10, D2, S2 OBUS D09
A	M149	9	C1 OBUS D15, N1 OBUS D10, F1 OBUS D14, N2 OBUS D09, F2 OBUS D13, S1 OBUS D08, K1 OBUS D12, S2, K2 OBUS D11, V1 BD11
A	M302	10	F2 SLAVE CLEAR, T2 SLAVE STROBE
A	M206	11	E1 MMT, H2 SSYN, L1 CLK, P2 MAINT, S1 REV, V2 TAPE CLK
A	M239	12	COMMAND REGISTER
A	M113	13	C1 DAT 11, N1 DAT 07, F1 DAT 08, N2 DAT 04, F2 DAT 05, S1 DAT 01, K1 DAT 02, S2 DAT 09, K2 DAT 10, V2 DAT 06
A	M205	14	J2 MTE, E1 DAT 15, R2, M1, DAT 17, U2, DAT 16, CLK
A	M121	15	E1 DAT 17, J2 DAT 16, L1 DAT 17, P2 DAT 15, S1 DAT 16, V2 DAT 15
A	M205	16	J2 DAT 12, E1 DAT 03, R2, M1, DAT 09, U2, DAT 06, DAT 00
A	M121	17	E1 DAT 12, J2 DAT 06, L1 DAT 12, P2 DAT 03, S1 DAT 09, V2 DAT 00
A	M161	18	UNIT SELECT DECODER
A	M611	19	B1 UNIT SELE 0, L2 UNIT SELE 7, E1 UNIT SELE 1, P1 CON STOP, H1 UNIT SELE 2, S1 CON GO, F2 UNIT SELE 3, R2 CON REV REM, K1 UNIT SELE 4, U1 CON FWD REM, J2 UNIT SELE 5, T2 CON ALL HALT, M1 UNIT SELE 6, V2 CON PWR UP DLY
A	M908	20	COMMAND CONN.
A	G888	21	TIMING TRACK R/W AMP
A	W032	22	TU56 ANALOG CONN.
B	UNIBUS	1	
B	UNIBUS	2	
B	M105	3	ADDRESS SELECTOR
B	M782	4	INTERRUPT CONTROL
B	M796	5	UNIBUS MASTER CONTROL
B	M783	8	E2 OBUS D06, U2 OBUS D00, C1 OBUS D07, K1 BUS SSYN, H2 OBUS D05, N2 BUS A17, K2 OBUS D04, T2 BUS A16, M2 OBUS D03, F2, P2 OBUS D02, D2, S2 OBUS D01
B	M149	9	C1 OBUS D07, N1 OBUS D02, F1 OBUS D06, N2 OBUS D01, F2 OBUS D05, S1 OBUS D00, K1 OBUS D04, S2, K2 OBUS D03, V1
B	M307	10	K1 TP'S, H2 CLK
B	M205	11	J2, E1 BLKM, R2 NEW UNIT SELECT, M1, U2
B	M112	12	C1 TM ENABLE, N1 BUS TO RWB, F1 SSYN, N2 TC INT, F2 TM ENABLE, S1 WRITE OK, K1 BUS TO MAINT, S2 BINIT, K2 BUS TO XDAT, V2 REQUEST BUS
B	M113	13	C1 DAT 03, N1 DECODE DLY, F1 DAT 00, N2 CLK, F2 SELE 0, S1 UPS, K1 SELE 10, S2 RDY ENB, K2 CLK, V2 UPS
B	M205	14	J2 DAT 13, E1 DAT 04, R2, M1, DAT 10, U2, DAT 07, DAT 01
B	M121	15	E1 DAT 13, J2 DAT 07, L1 DAT 13, P2 DAT 04, S1 DAT 10, V2 DAT 01
B	M205	16	J2 DAT 14, E1 DAT 05, R2, M1, DAT 11, U2, DAT 08, DAT 02
B	M121	17	E1 DAT 14, J2 DAT 08, L1 DAT 14, P2 DAT 05, S1 DAT 11, V2 DAT 02
B	G879	18	U2 SELE
B	M502	19	D2 WRITE OK, U2
B	G888	20	DATA TRACK #2 R/W AMP
B	G888	21	DATA TRACK #1 R/W AMP
A	G888	23	MARK TRACK R/W AMP
B	G888	23	DATA TRACK #0 R/W AMP
B	M050	24	INDICATOR DRIVERS

REVISIONS		
CHK	CHANGE NO.	REV.
	TC11-00002	A
JANSON		
	TC11-00003	B
JANSON		
	TC11-00006	C
JANSON		
	TC11-00008	D
P. JANSON		
	TC11-00011	E

FIRST USED ON OPTION/MODEL: PDP-11

DO NOT SCALE DRAWING

UNLESS OTHERWISE SPECIFIED
DIMENSION IN INCHES
TOLERANCES
DECIMALS ± .005 FRACTIONS ± 1/64 ANGLES ± 0°30'
FINAL SURFACE QUALITY ✓
REMOVE BURRS AND BREAK SHARP CORNERS

MATERIAL

FINISH

DRN. K. HITCHELL DATE
CHK'D. DATE
ENG. DATE
PROJ. ENG. DATE
PROD. DATE

NEXT HIGHER ASSY: A-ML-TC11-0

SCALE

SHEET 1 OF 2

digital EQUIPMENT CORPORATION
MAYNARD MASSACHUSETTS

TITLE: MODULE UTILIZATION

SIZE D CODE MU NUMBER TC11-0-01 REV. E

DIST.

DEC FORM NO. DRD 112

This drawing and specifications, herein, are the property of Digital Equipment Corporation and shall not be reproduced or copied or used in whole or in part as the basis for the manufacture or sale of items without written permission.

USAGE

	1	2	3	4 M307	5 G736	6 M111	7 M113	8 M115	9 M115	10 M627	11 M611	12 M161	13 M127	14 M206	15 M207	16 M121	17 M113	18 M228	19 M115	20 M117	21 M115	22 M232
C				K1 H2 DELAYED TPI	PRIORITY PLUG	B1 CLEAR XDAT D2 DAT TO BUS E1 SELE Ø H1 REG SELECT F2 IN K1 MSTR R J2 SELE ØØ M1 READY L2 READY P1 INC BA-WC N2 S1 DINHB R2 WRITE OK U1 CLEAR XDAT T2 DECODE ERR V2	C1 TCST TO BUS F1 TCWC TO BUS F2 DAT TO BUS K1 BUS TO RWB K2 INC BA-WC N1 TC INT N2 WREN S1 TCBA TO BUS S2 DAT TO BUS V2 CLEAR XDAT	D1 BUS TO TCCM+1 H2 BUS TO TCWC J1 BUS TO TCCM M2 BUS TO TCBA N1 BUS TO XDAT S2 CLEAR XDAT U1 CLOCK DAT V1 BUS TO DAT	D1 CLEAR DAT H2 READY J1 CLEAR RWB 2-Ø M2 READY N1 WREN S2 READY U1 READY V1 READY	E1 ZLPB J2 DAT SHIFT ENB L1 CLPB P2 CLOCK DAT S1 BUS TO DAT V2	B1 MK TRK DECODER L2 RWC1 E1 BUS TO TCCM P1 LPB TO DAT H1 CLEAR DAT S1 SET REQ F2 BUS TO TCCM+1 R2 DO CLEAR K1 BINIT U1 BINIT J2 OBVERSE END T2 M1 RWC2 V2	FUNCTION DECODER	J2 RWB5 V2 RWB3 P2 RWB4	E1 RWB5 H2 RWB4 L1 RWB3 P2 RWB2 S1 RWB1 V2 RWBØ	E1 LPB5 H2 LPB4 L1 LPB3 P2 LPBØ S1 LPB2 V2 LPB1	E1 RWB2 J2 RWC2 L1 RWB1 P2 RWC1 S1 RWBØ V2 MK TRK DECODER	C1 READY ENB N1 MK TRK DECODER F1 RWB2 N2 MK TRK DECODER F2 RWB1 S1 MK TRK DECODER K1 RWBØ S2 SET REQ K2 UPS V2 CLPB	MARK TRACK DECODER	D1 ZDAT H2 SET REQ J1 ZDAT M2 MARK TRACK DECODER N1 ZDAT S2 WRITE U1 SET REQ V1 RSEQ	E1 TM ENABLE J2 READY ENB L1 READY P2 SET REQ S1 READY V2 ZDAT	D1 CLOCK DAT H2 DO J1 CLOCK DAT M2 DAT ENABLE N1 READY S2 GO U1 FOWARD V1 MTE	J2 C3 P2 C2	U2 C1
D				A1 NEW UNIT SELECT H2 UNIT 1 B1 NEW UNIT SELECT F2 BDØ8 K1 T2 NEW UNIT SELECT NEW UNIT SELECT	K1 UNIT SELECT DELAY H2 UPS	C1 ILO N1 DATM F1 ILO N2 DATM F2 ILO S1 RWDAT K1 RWALL S2 ENDZ K2 DATM V2 RESET ERRORS	F2 ENDZ R2 DATM H2 PAR P2 C1 MISS V1 WCO K1 READY ENB P1	C1 TP'S N1 STP F1 TP'S N2 STOP F2 TP'S S1 STOP K1 TP1 S2 TP CONTROL K2 TPØ V2 RESET ERRORS	F2 TP'S L2 TP'S	F2 DECODE DLY T2 SSYN	K1 UPS H2 UPS	B1 L2 STOP D2 TP1 P1 STP E1 PTPØ N2 ERROR STOP H1 TPØØ S1 LPB TP F2 TPØ1 R2 SELE K1 TPØ U1 ILO J2 TP CONT T2 ERROR M1 V2 MTE	C1 PTP1 N1 F1 PTPØ N2 PAR F2 TPØØ S1 MTE K1 TPØ1 S2 SELE K2 RESET ERRORS V2 NO CHANGE	D1 CLPB H2 BLKM J1 CLPB M2 MARK TRACK DECODER N1 ERROR DISABLE S2 ILO U1 DATM V1 NEW UNIT SELECT	J2 LPB TO DAT P2 LPB ONE	ERROR	B1 DATM L2 WALL EN D2 FINAL P1 WRITE EN E1 DATA N2 DO STROBE H1 ST REV CH S1 WALL F2 ST BLK MK R2 CA K1 IDLE U1 C2B J2 MK TRK DECODER T2 M1 RT ENABLE V2 DOA	E1 MTE J2 MK TRK DECODER L1 CLEAR DAT P2 GO S1 PAR V2 CLEAR XDAT	N1 DO CLEAR RWB SW F1 READY ENB N2 WALL F2 READY S1 DO STROBE K1 SELE S2 REVERSE K2 BLKM V2 ALL HALT	C1 N1 READY ENB F1 N2 MK TRK DECODER F2 S1 MK TRK DECODER K1 S2 REQ BUS K2 V2

	23	24	25	26	27	28	29	30	31	32	33	34	35	36	37	38	39	40	41	42	43	44
USAGE	M117	M984																				
C	E1 UPS J2 WREN L1 WREN P2 S1 WREN V2	LIGHT CABLE																				
D	D2 SYNC FOR MSSB L2 MSSB F2 READY N2 SET REQ J2 LPB TP R2 TC INT																					

FIRST USED ON OPTION/MODEL: PDP-11

DO NOT SCALE DRAWING

UNLESS OTHERWISE SPECIFIED
DIMENSION IN INCHES
TOLERANCES
DECIMALS ± .005 FRACTIONS ± 1/64 ANGLES ± 0°30'
FINAL SURFACE QUALITY √
REMOVE BURRS AND BREAK SHARP CORNERS

MATERIAL —

FINISH

DRN.	K. MITCHELL	DATE 11/13/70
CHK'D.		DATE
ENG.		DATE 11-17-70
PROJ. ENG.		DATE
PROD.	R. Call	DATE 11/17/70

NEXT HIGHER ASSY: A-ML-TC11-0

SCALE —

SHEET 2 OF 2

digital EQUIPMENT CORPORATION MAYNARD, MASSACHUSETTS

TITLE: MODULE UTILIZATION

SIZE D CODE MU NUMBER TC11-0-01 REV. E

DIST

REVISIONS: REV. | CHANGE NO. | CHK

DEC FORM NO. DRD 112

DIGITAL EQUIPMENT CORPORATION
MAYNARD, MASSACHUSETTS

PARTS LIST

MADE BY KAREN KRYSIAK	CHECKED M. MACKENZIE	SECTION
DATE 9-17-70	DATE 10-19-70	1
ENG L.P. Gordon	PROD D Cull	ISSUED SECT.
DATE	DATE 11/3/70	1

ITEM NO.	DWG NO./PART NO.	DESCRIPTION	QUANTITY/VARIATION
	G736	JUMPER MODULE	1
	G879	TRANSPORT DETECTOR	1
	G888	MANCHESTER READER/WRITER	5
	MØ5Ø	50MA INDICATOR DRIVER	1
	M1Ø5	ADDRESS SELECTOR MODULE (REV "C" & BEYOND)	1
	M111	INVERTER	3
	M112	NOR GATE	3
	M113	TEN 2-INPUT NAND GATES	8
	M115	EIGHT 3-INPUT NAND GATES	5
	M117	SIX 4-INPUT NAND GATES	3
	M119	THREE 8-INPUT NAND GATES	1
	M121	AND/NOR GATE	5
	M127	2-2-2-3 AND/NOR GATE	1
	M149	9 x 2 NAND WIRED OR MATRIX	2
	M161	BINARY TO OCTAL/DECIMAL DECODER	2
	M2Ø2	J-K FLIP-FLOP	1
	M2Ø3	8 R/S FLIP-FLOP	1
	M2Ø5	5 "D" FLIP-FLOP	6
	M2Ø6	GENERAL PURPOSE FLIP-FLOP	2
	M2Ø7	GENERAL PURPOSE FLIP-FLOP	1
	M228	MARK TRACK DECODER	1
	M239	THREE 4-BIT COUNTER/REGISTER	1

TITLE	ASSY NO.	SIZE	CODE	NUMBER	REV.	ECO NO.
MODULE UTILIZATION	D-MU-TC11-Ø-Ø1	A	PL	TC11-Ø-Ø1	E	TC11-00011
	SHEET 1 OF 2	DIST.				

DIGITAL EQUIPMENT CORPORATION
MAYNARD, MASSACHUSETTS

PARTS LIST

MADE BY KAREN KRYSIAK	CHECKED M. MACKENZIE	SECTION
DATE 9-17-70	DATE 10-19-70	1
ENG L.P. Gordon	PROD D Cull	ISSUED SECT.
DATE 11/3/70	DATE 11/3/70	1

ITEM NO.	DWG NO./PART NO.	DESCRIPTION	QUANTITY/VARIATION
	M3Ø2	DUAL DELAY MULTIVIBRATOR	2
	M3Ø7	INTERGRATING ONE SHOT	4
	M5Ø2	NEGATIVE INPUT CONVERTER	1
	M6Ø2	PULSE AMPLIFIER	1
	M6Ø6	PULSE GENERATOR	1
	M611	HIGH - SPEED POWER INVERTER	2
	M627	NAND POWER AMPLIFIER	1
	M796	UNIBUS MASTER CONTROL	1
	M798	UNIBUS DRIVER	1
	M7821	INTERRUPT CONTROL MODULE	1
	M783	UNIBUS TRANSMITTER MODULE	2
	M784	UNIBUS RECEIVER MODULE	2
	M795	WC & BA MODULE	1
	M141	AND/NOR GATES	1
	5408780	PRIORITY JUMPER LEVEL # 6	1

TITLE	ASSY NO.	SIZE	CODE	NUMBER	REV.	ECO NO.
MODULE UTILIZATION	D-MU-TC11-Ø-Ø1	A	PL	TC11-Ø-Ø1	E	
	SHEET 2 OF 2	DIST.				

This drawing and specifications, herein, are the property of Digital Equipment Corporation and shall not be reproduced or copied or used in whole or in part as the basis for the manufacture or sale of items without written permission.

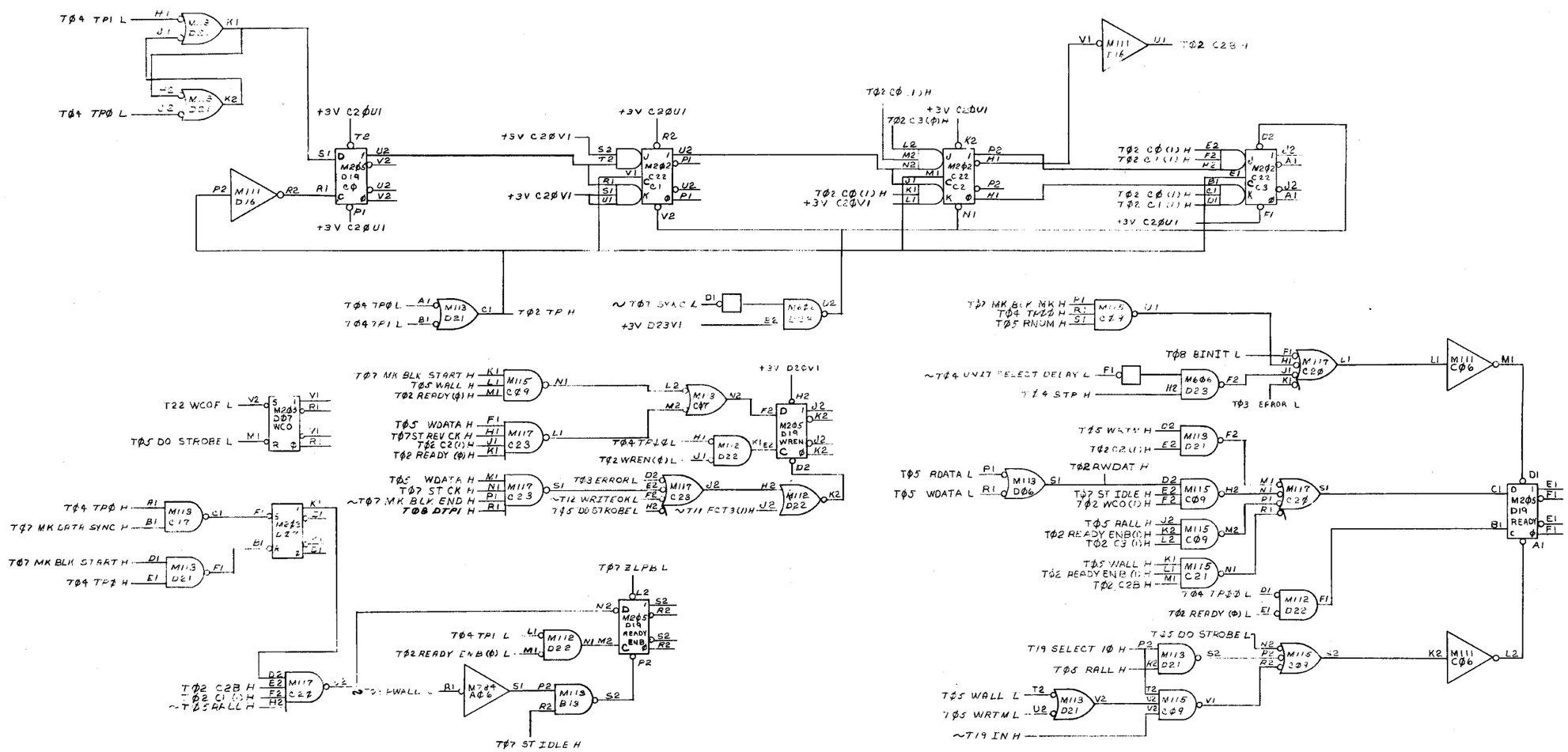

FIRST USED ON OPTION/MODEL	QTY.	DESCRIPTION	PART NO.	ITEM NO.
PDP-11		PARTS LIST		

UNLESS OTHERWISE SPECIFIED
UNLESS OTHERWISE SPECIFIED
DIMENSION IN INCHES
TOLERANCES
DECIMALS ± .005 FRACTIONS ± 1/64 ANGLES ± 0°30'
FINAL SURFACE QUALITY
REMOVE BURRS AND BREAK SHARP CORNERS

MATERIAL

FINISH

DRN. DATE 11/18/70
CHKD. DATE
ENG. DATE
PROJ. ENG. DATE
PROD. DATE 11/3/70
NEXT HIGHER ASSY
SCALE
SHEET 1 OF 1

digital EQUIPMENT CORPORATION
MAYNARD MASSACHUSETTS

TITLE
DECTAPE CONTROL
CONTROL

SIZE D CODE NUMBER TC11-Ø-Ø2 REV C
DIST.

REVISIONS

CHK	CHANGE NO.	REV.
	TC11-00002	A
	JANSON	
	TC11-00003	B
	JANSON	
	TC11-00006	C
	JANSON	

DEC FORM NO DRD 102A

This drawing and specifications, herein, are the property of Digital Equipment Corporation and shall not be reproduced or copied or used in whole or in part as the basis for the manufacture or sale of items without written permission.

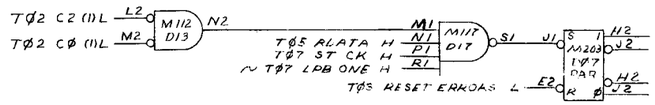

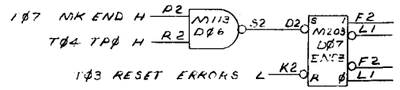

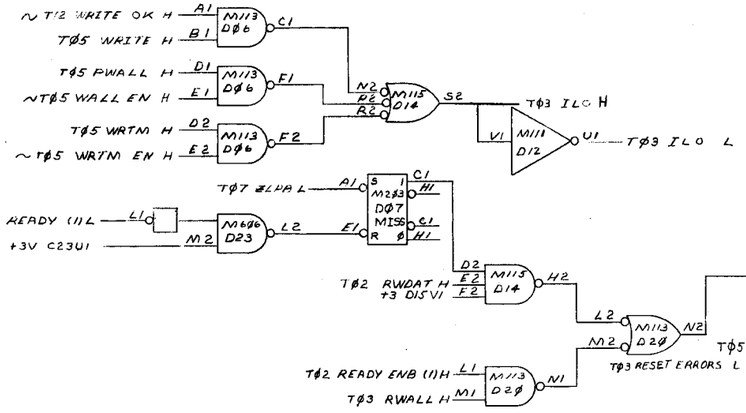

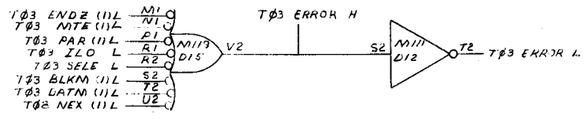

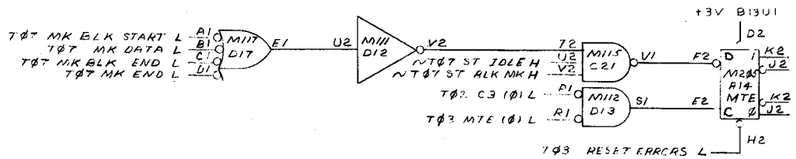

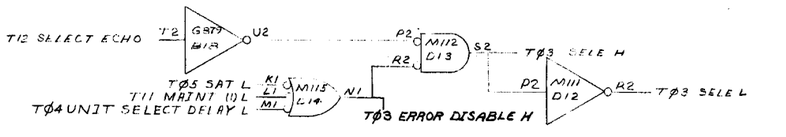

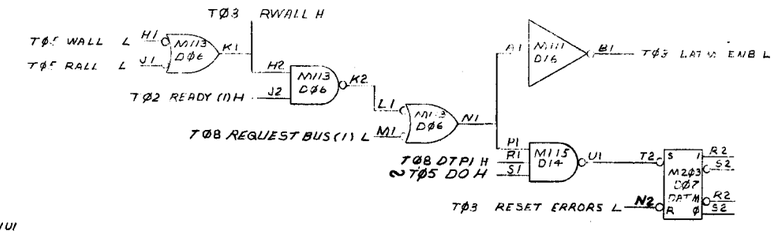

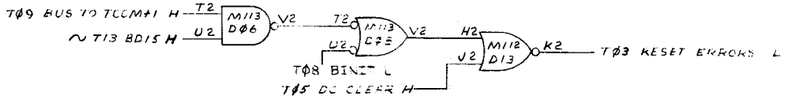

REVISIONS		
CHK	CHANGE NO.	REV.
AB	TC11-00002	A
	JANSON 2-12-71	
	TC11-00003	B
	JANSON 2-26-71	

FIRST USED ON (OPTION NO.) PDP-11	QTY.	DESCRIPTION	PART NO. / ITEM NO.
		PARTS LIST	

UNLESS OTHERWISE SPECIFIED
UNLESS OTHERWISE SPECIFIED DIMENSION IN INCHES
TOLERANCES
DECIMALS ± .005 FRACTIONS ± 1/64 ANGLES ± 0°30'
FINAL SURFACE QUALITY √
REMOVE BURRS AND BREAK SHARP CORNERS

MATERIAL —

FINISH —

DRN. — DATE —
CHKD. A. Bell DATE 11/9/70
ENG. S. Gray DATE 11/9/70
PROJ. ENG. — DATE —
PROD. A Call DATE 11/5/70
NEXT HIGHER ASSY A-ML-TC11-√
SCALE —
SHEET 1 OF 1

digital EQUIPMENT CORPORATION MAYNARD MASSACHUSETTS

TITLE: I ELECTABLE CONTROL ERRORS

SIZE D | CODE BS | NUMBER TC11-√-√3 | REV. B | DIST.

DEC FORM NO. DRD 102A

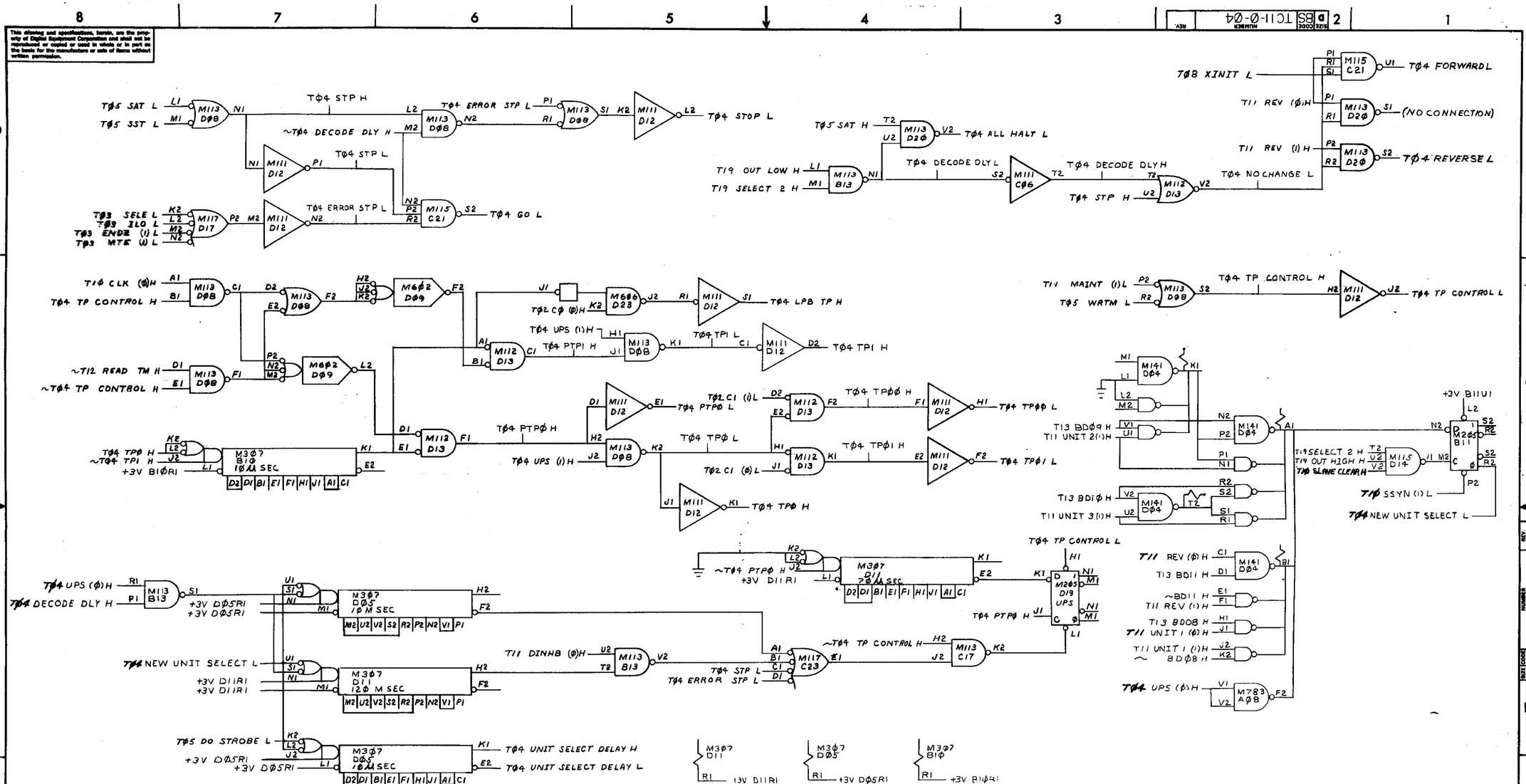

FIRST USED ON OPTION/MODEL	QTY.	DESCRIPTION	PART NO.	ITEM NO.
PDP-11		PARTS LIST		

UNLESS OTHERWISE SPECIFIED
DIMENSION IN INCHES
TOLERANCES
DECIMALS ± .005 FRACTIONS ± 1/64 ANGLES ± 0°30'
FINAL SURFACE QUALITY
REMOVE BURRS AND BREAK SHARP CORNERS

MATERIAL

FINISH

DRN. J. Vincent DATE 9-11-70
CHK'D. [signature] DATE 11/3/70
ENG. [signature] DATE 11/3/70
PROJ. ENG. [signature] DATE [illegible]
PROD. W Cull DATE 11/3/70

NEXT HIGHER ASSY
A-ML-TC11-0

SCALE
SHEET 1 OF 1

digital EQUIPMENT CORPORATION
MAYNARD, MASSACHUSETTS

TITLE
DEC TAPE CONT
TP, UPS, MOTION CONT

SIZE	CODE	NUMBER	REV.
D	BS	TC11-0-04	A

DIST.

REVISIONS

CHK	CHANGE NO.	REV.
	TC11-00008	A

P. JANSON 12-1-71
[signature] 12-1-71

DEC FORM NO. DRD 102A

This drawing and specifications, herein, are the property of Digital Equipment Corporation and shall not be reproduced or copied or used in whole or in part as the basis for the manufacture or sale of items without written permission.

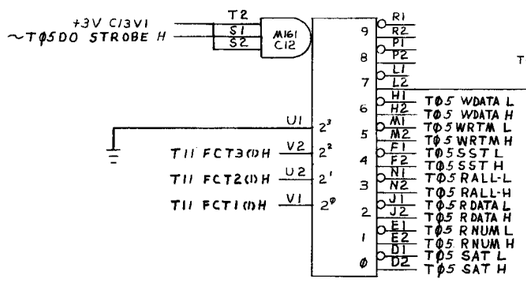

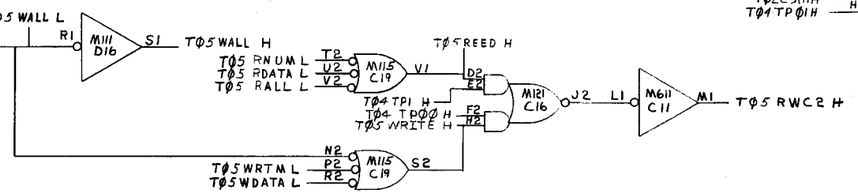

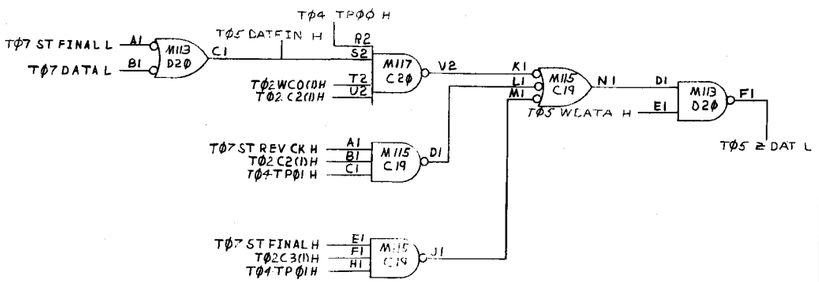

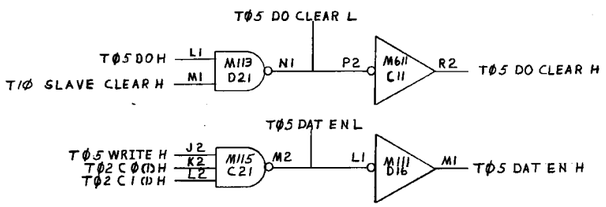

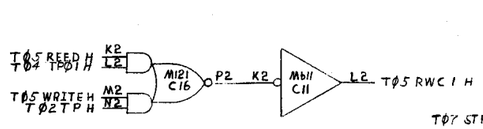

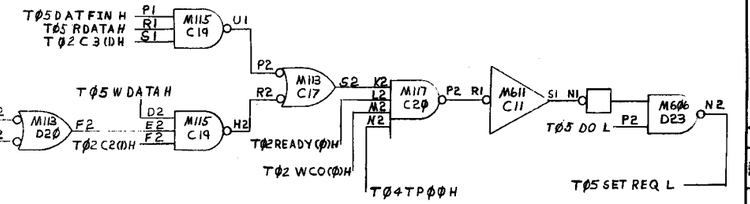

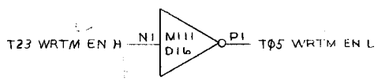

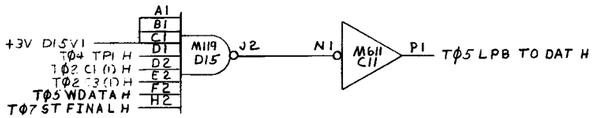

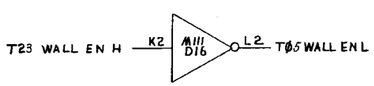

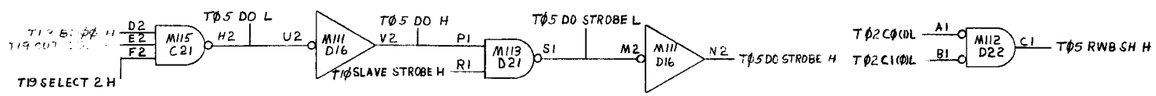

REVISIONS	REV.
CHANGE NO. TC11-00002	A
CHK.	

JANSON 2-3-71

DEC FORM NO. DRD 102A

FIRST USED ON OPTION/MODEL	QTY.	DESCRIPTION	PART NO.	ITEM NO.
PDP-11		PARTS LIST		

UNLESS OTHERWISE SPECIFIED

UNLESS OTHERWISE SPECIFIED
DIMENSION IN INCHES
TOLERANCES
DECIMALS ± .005 FRACTIONS ± 1/64 ANGLES ± 0°30'
FINAL SURFACE QUALITY √
REMOVE BURRS AND BREAK SHARP CORNERS

MATERIAL

FINISH

		DATE
DRN.	[illegible]	9/15/70
CHKD	[illegible]	11/3/70
ENG	R Carlson	11/17/70
PROJ. ENG	[illegible]	11/17/70
PROD.	[illegible]	11/23/70

NEXT HIGHER ASSY A-ML-TC11-Ø

SCALE

SHEET 1 OF 1

digital EQUIPMENT CORPORATION MAYNARD MASSACHUSETTS

TITLE
DEC TAPE CONTROL

SIZE	CODE	NUMBER	REV.
D	BS	TC11-Ø-Ø5	A

DIST.

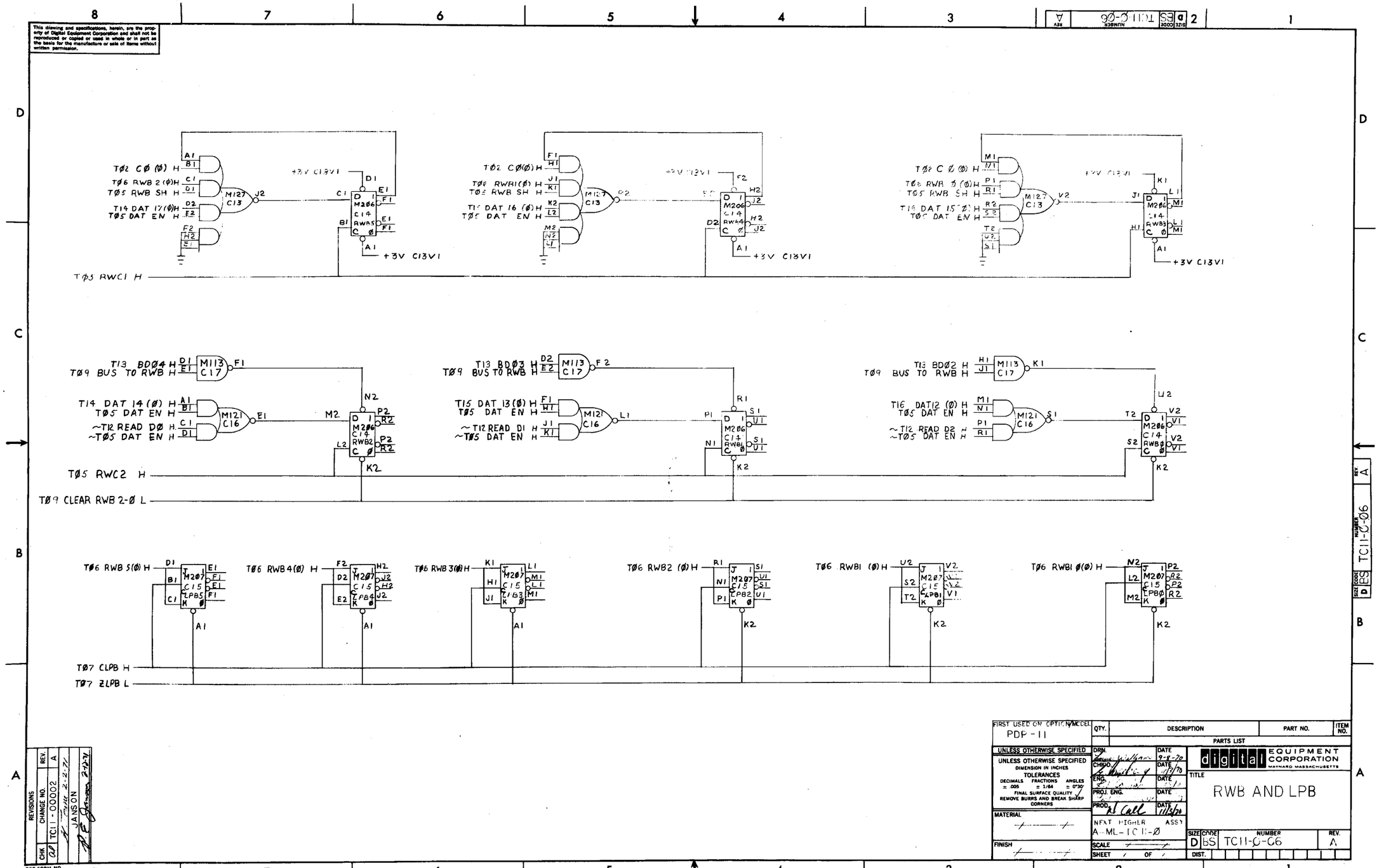

This drawing and specifications, herein, are the property of Digital Equipment Corporation and shall not be reproduced or copied or used in whole or in part as the basis for the manufacture or sale of items without written permission.

REVISIONS		
CHK	CHANGE NO.	REV.
	TC11-00002	A
	JANSON	

FIRST USED ON OPTION/MODEL: PDP-11

UNLESS OTHERWISE SPECIFIED
DIMENSION IN INCHES
TOLERANCES
DECIMALS ± .005 FRACTIONS ± 1/64 ANGLES ± 0°30'
FINAL SURFACE QUALITY
REMOVE BURRS AND BREAK SHARP CORNERS

MATERIAL

FINISH

QTY.	DESCRIPTION	PART NO.	ITEM NO.
	PARTS LIST		

DRN. — DATE 9-8-70
CHKD. — DATE 11/3/70
ENG. — DATE
PROJ. ENG. — DATE
PROD. — DATE 11/5/70

NEXT HIGHER ASSY: A-ML-TC11-Ø

SCALE
SHEET 1 OF 1

digital EQUIPMENT CORPORATION
MAYNARD MASSACHUSETTS

TITLE: RWB AND LPB

SIZE D | CODE BS | NUMBER TC11-Ø-Ø6 | REV. A

DIST.

DEC FORM NO. DRD 102A

This drawing and specifications, herein, are the property of Digital Equipment Corporation and shall not be reproduced or copied or used in whole or in part as the basis for the manufacture or sale of items without written permission.

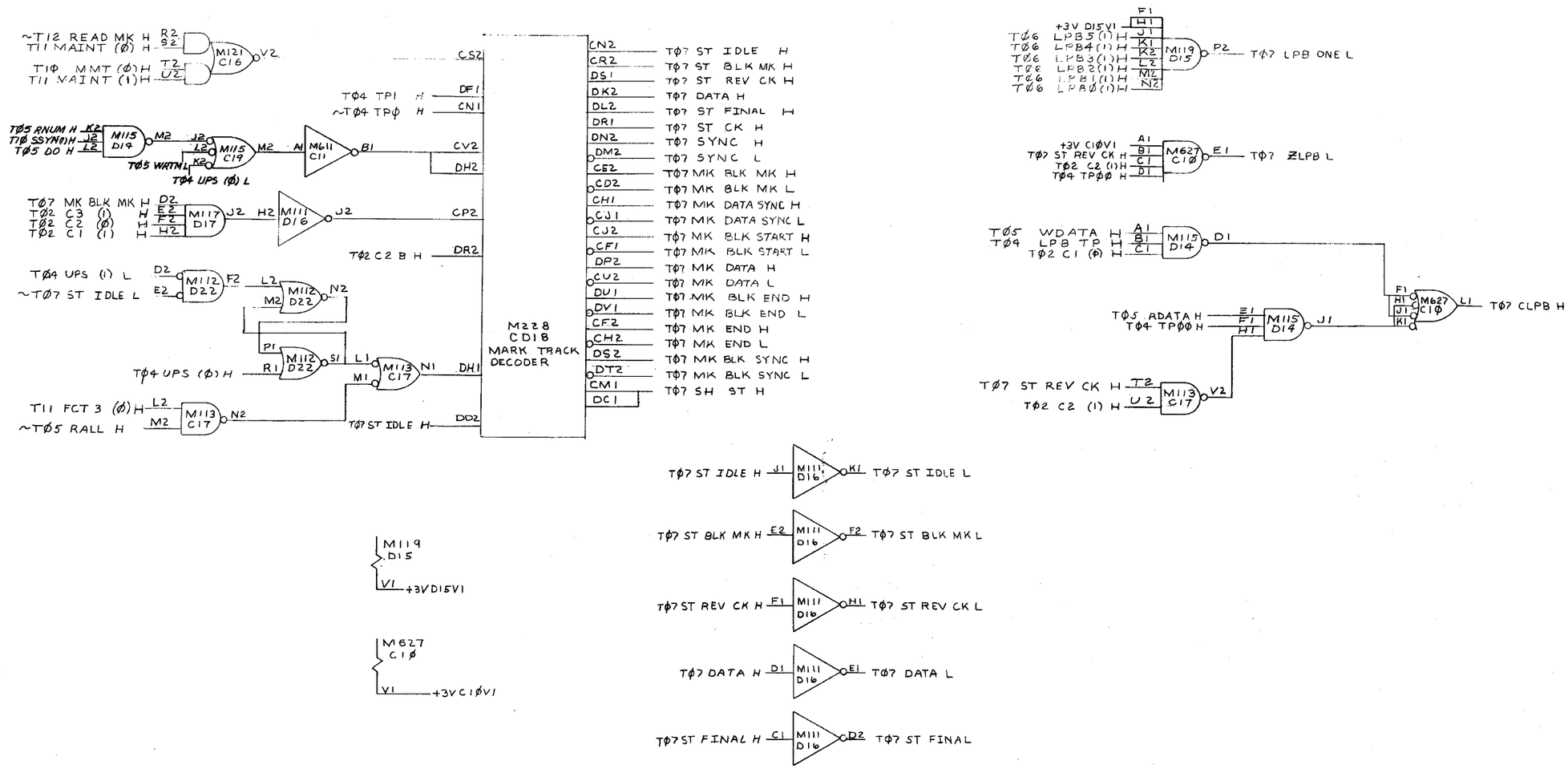

FIRST USED ON OPTION MODEL	QTY.	DESCRIPTION	PART NO.	ITEM NO.
PDP 11		PARTS LIST		

UNLESS OTHERWISE SPECIFIED
UNLESS OTHERWISE SPECIFIED
DIMENSION IN INCHES
TOLERANCES
DECIMALS ± .005 FRACTIONS ± 1/64 ANGLES ± 0°30'
FINAL SURFACE QUALITY
REMOVE BURRS AND BREAK SHARP CORNERS

MATERIAL

FINISH

DRN. E. Wilson DATE 8/8/70
CHKD. [signature] DATE 11/3/70
ENG. [signature] DATE 11/3/70
PROJ. ENG. [signature] DATE 11/3/70
PROD. [signature] DATE 11/3/70

NEXT HIGHEST ASSEMBLY A-ML-TC11-Ø

SCALE
SHEET 1 OF 1

digital EQUIPMENT CORPORATION
MAYNARD, MASSACHUSETTS

TITLE
MARK TRACK DECODER

SIZE	CODE	NUMBER	REV.
D	BS	TC11-Ø-Ø7	A

DIST.

REVISIONS

CHK	CHANGE NO.	REV.
[signature]	TC11-00011	A
	[signature]	
	JANSON	
	[signature]	

DEC FORM NO. DRD 102A

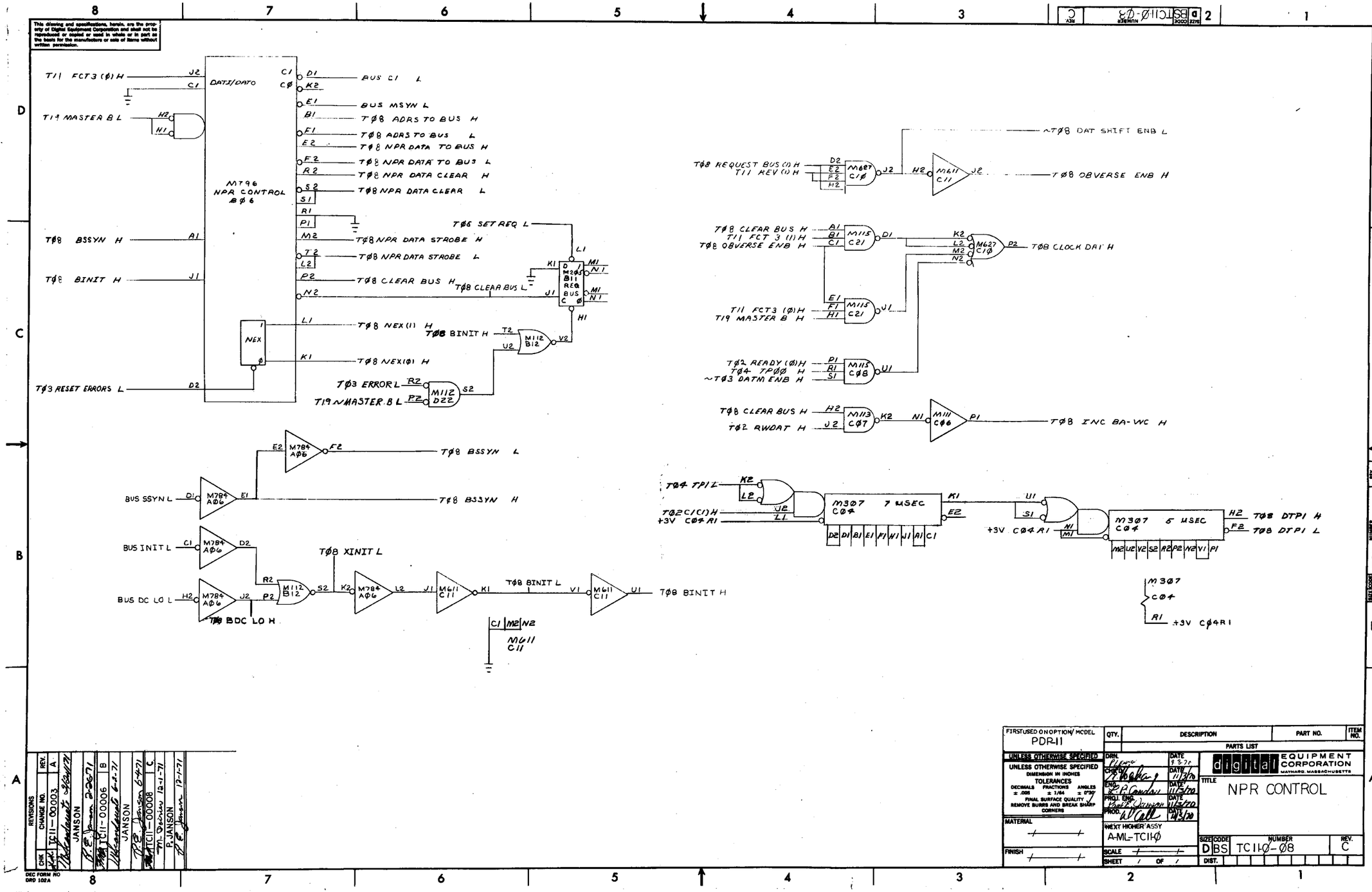

FIRST USED ON OPTION/MODEL	QTY.	DESCRIPTION	PART NO.	ITEM NO.
PDP-11		PARTS LIST		

UNLESS OTHERWISE SPECIFIED
DIMENSION IN INCHES
TOLERANCES
DECIMALS ± .005 FRACTIONS ± 1/64 ANGLES ± 0°30'
FINAL SURFACE QUALITY
REMOVE BURRS AND BREAK SHARP CORNERS

MATERIAL
FINISH

DRN. DATE 9-3-70
CHK'D DATE 11/3/70
ENG. DATE 11/3/70
PROJ. ENG. DATE 11/3/70
PROD. DATE 11/3/70

NEXT HIGHER ASSY A-ML-TC11Ø
SCALE
SHEET 1 OF 1

digital EQUIPMENT CORPORATION
MAYNARD, MASSACHUSETTS

TITLE NPR CONTROL

SIZE D CODE BS NUMBER TC11Ø-Ø8 REV. C
DIST.

REVISIONS

CHK	CHANGE NO.	REV.
	TC11-00003	A
	TC11-00006	B
	TC11-00008	C
	P. JANSON	

DEC FORM NO DRD 102A

This drawing and specifications, herein, are the property of Digital Equipment Corporation and shall not be reproduced or copied or used in whole or in part as the basis for the manufacture or sale of items without written permission.

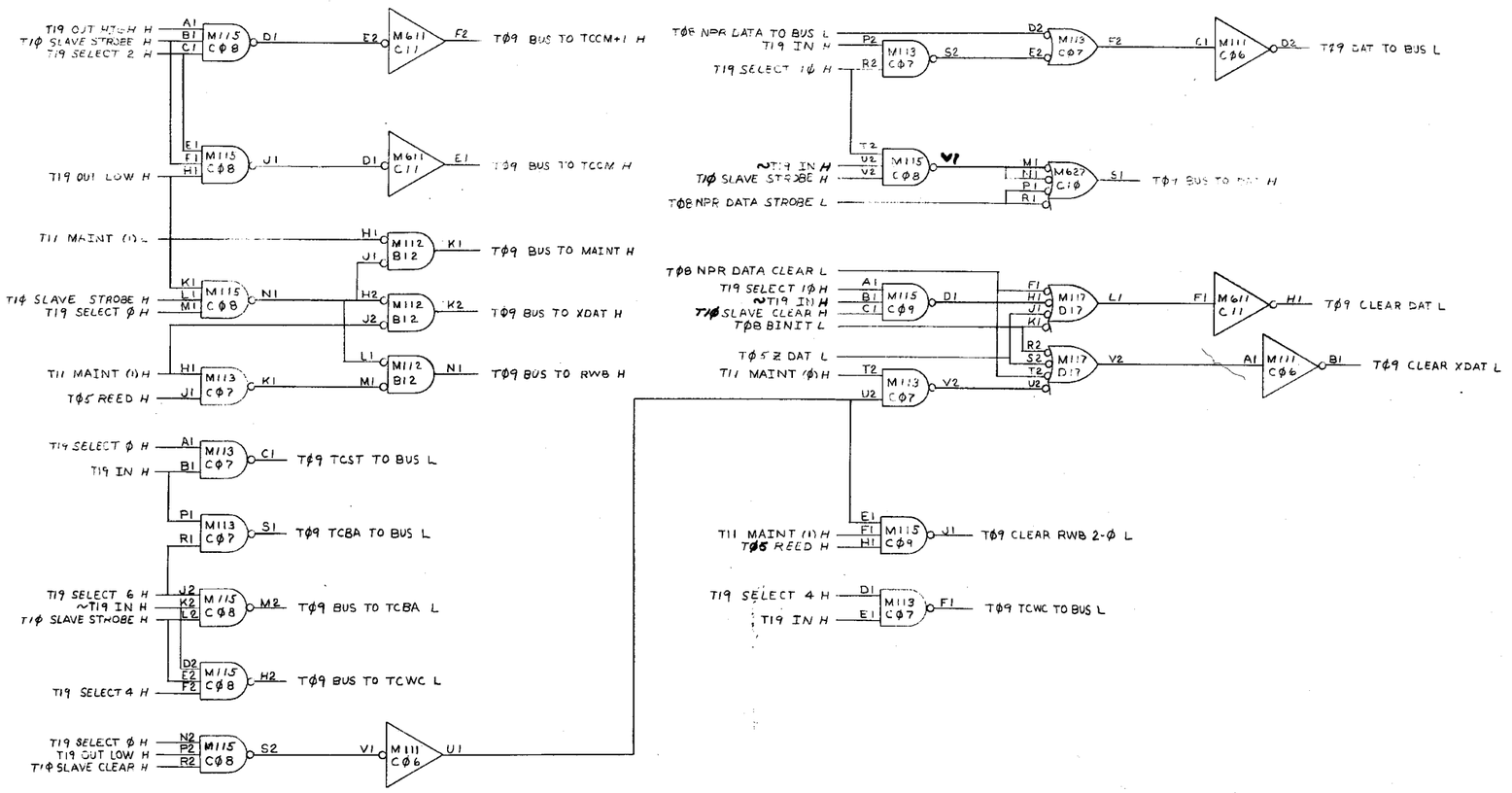

FIRST USED ON OPTION/MODEL: PDP-11	QTY.	DESCRIPTION	PART NO. / ITEM NO.
		PARTS LIST	

UNLESS OTHERWISE SPECIFIED

UNLESS OTHERWISE SPECIFIED
DIMENSION IN INCHES
TOLERANCES
DECIMALS ± .005 | FRACTIONS ± 1/64 | ANGLES ± 0°30'
FINAL SURFACE QUALITY 7
REMOVE BURRS AND BREAK SHARP CORNERS

MATERIAL

FINISH

DRN. K. Kuzyk	DATE 9-7-70	digital EQUIPMENT CORPORATION MAYNARD, MASSACHUSETTS
CHK'D. L. Mahoney	DATE 11/2/70	
ENG. S. P. Condon	DATE 11/2/70	
PROJ. ENG. Lloyd Jarvis	DATE 11/2/70	
PROD. W. Clark	DATE 11/2/70	

TITLE: REGISTER CONTROL

NEXT HIGHER ASSY: A-ML-TC11-Ø

SIZE D | CODE BS | NUMBER TC11-Ø-Ø9 | REV.

SCALE

SHEET 1 OF 1

DIST.

REVISIONS | REV. | CHANGE NO. | CHK

DEC FORM NO DRD 102A

This drawing and specifications, herein, are the property of Digital Equipment Corporation and shall not be reproduced or copied or used in whole or in part as the basis for the manufacture or sale of items without written permission.

T10 SLAVE CLEAR H

T10 SLAVE STROBE H

T9 REG SELECT L — M3002 A10 500ns — F2 — M3002 A10 500ns — T2 — M112 B12 — F1 — M2006 A11 SSYN — T0 SSYN (1) H — M7813 B8 — BUS SSYN L

T0 BINIT L

~T9 REG SELECT L — M3002 D70 500ns — T2

T13 BD06 H — M113 B13

T9 BUS TO MAINT H

T12 WRITE OK H

T05 WRTM L

T11 MAINT (0) L

T23 WRTM EN H

~T03 SELE H — M112 B12 — M117 C20 — M3007 B10 8.33 µs — +3V B10R1

+3V A13V1 — M2006 A11 — T0 BINIT L

M2005 A11 CLK

T13 BD05 H

T9 BUS TO MAINT H — M2006 A11 MMT

~T13 BD06 H

T9 BUS TO MAINT H — M113 B13

T10 TM ENABLE L — M112 B12 — T10 TM ENABLE H

M2006 A11 TAPE CNTR

T0 BINIT L

REVISIONS			
CHK	CHANGE NO.	REV.	
	TC11-00006	A	
JANSON	Mchenhard 6-2-71		
	TC11-00011	B	
JANSON			

DEC FORM NO. DRD 102A

FIRST USED ON OPTION/MODEL	QTY.	DESCRIPTION	PART NO.	ITEM NO.
PDP11		PARTS LIST		

UNLESS OTHERWISE SPECIFIED

UNLESS OTHERWISE SPECIFIED DIMENSION IN INCHES TOLERANCES DECIMALS ± .005 FRACTIONS ± 1/64 ANGLES ± 0°30' FINAL SURFACE QUALITY REMOVE BURRS AND BREAK SHARP CORNERS

MATERIAL

FINISH

DRN.	W. E. Wilson	DATE 10/19/70
CHK'D.	A. Mishra	DATE 10/19/70
ENG.		DATE 11/5/70
PROJ. ENG.		DATE 11/5/70
PROD.	W. Scull	DATE 11/13/70

NEXT HIGHER ASSY A-ML-TC11-0

SCALE

SHEET OF

digital EQUIPMENT CORPORATION MAYNARD, MASSACHUSETTS

TITLE SLAVE RESP AND MAINT BITS

SIZE	CODE	NUMBER	REV.
D	BS	TC11-0-10	B

DIST.

This drawing and specifications, herein, are the property of Digital Equipment Corporation and shall not be reproduced or copied or used in whole or in part as the basis for the manufacture or sale of items without written permission.

T7,8 BERS TO BUS H

M783 A02 — T2 — BUS RIA L

M783 B02 — N2 — BUS AIT L

T11 XBA16 (1) H

T11 XBA17 (1) H

BAOF L — H2

T18 BINIT H — J2

K2

COUNT | RESET | LOAD

XBA16 | XBA17

A | B | C | D

L1 | N2 | R2 | P2

D_A | D_B | D_C | D_D

M1 | K1 | N1 | J1

T13 BDØ4 H | T13 BDØ5 H

T7Ø9 BUS TO TCCM H

M784 AØ6 — F1 — H1 — T11 INT ENB (Ø) H

T11 INT ENB (1) H

T11 FCT 3 (1) H

M111 CØ6 — M2 — N2 — T11 FCT 3 (Ø) H

T11 FCT 2 (1) H

M784 AØ6 — L1 — M1 — T11 FCT 2 (Ø) H

M784 AØ6 — N1 — P1 — T11 FCT 1 (Ø) H

T11 FCT 1 (1) H

S2 | M2 | T2 | L2

COUNT | RESET | LOAD

INT ENB | FCT3 | FCT2 | FCT1

D_A | D_B | D_C | D_D

P1 | D1 | R1 | E1

T13 BDØ6 H | T13 BDØ3H | T13 BDØ2H | T13 BDØ1H

F1 | H1 | S1

T7Ø8 BINIT H

M239 A12

T11 DINHB (1) H

M111 CØ6 — R1 — S1 — T11 DINHB (Ø) H

T11 UNIT 3 (1) H

T11 UNIT 2 (1) H

M141 DØ4 — E2 — H2 — T11 UNIT1 (Ø) H

T11 UNIT 1 (1) H

U2 | E2 | V2 | D2

COUNT | RESET | LOAD

DINHB | UNIT3 | UNIT2 | UNIT1

D_A | D_B | D_C | D_D

C1 | F2 | U1 | B1 | V1 | A1

T7Ø9 BUS TO TCCM+1 H

T13 BD12 H | T13 BD1ØH | T13 BD09H | T13 BDØBH

T7Ø8 BINIT L

P2 R2 P2R2

M2Ø6 A11

+3V A13V1 — N2 — MAINT — K2 — D C

S1U1 S1U1

+3V A13V1 — R1 — REV — K2 — D C

T7Ø9 BUS TO TCCM+1 H

M2 | L2 — T13 BD13H

P1 | N1 — T13 BD11H

REVISIONS

REV.	CHANGE NO.	CHK
A	TC11-00002	al

M. Tom 2-2-71

JANSON

R Olson 2-9-71

DEC FORM NO DRD 102A

FIRST USED ON OPTION/MODEL	QTY.	DESCRIPTION	PART NO.	ITEM NO.
PDP-11		PARTS LIST		

UNLESS OTHERWISE SPECIFIED

UNLESS OTHERWISE SPECIFIED
DIMENSION IN INCHES
TOLERANCES
DECIMALS ± .005 | FRACTIONS ± 1/64 | ANGLES ± 0°30'
FINAL SURFACE QUALITY
REMOVE BURRS AND BREAK SHARP CORNERS

MATERIAL

FINISH

DRN. Margaret Wardlaw	DATE 9/8/70	
CHK'D M. Tom Va 1	DATE 11/3/70	
ENG. L P Carden	DATE 11/3/70	
PROJ. ENG. Paul D Severson	DATE 11/3/70	
PROD. W Cull	DATE 11/3/70	

NEXT HIGHER ASSY
A-ML-TC11-Ø

SCALE

SHEET 1 OF 1

digital EQUIPMENT CORPORATION MAYNARD, MASSACHUSETTS

TITLE
COMMAND REGISTER

SIZE D | CODE BS | NUMBER TC11-Ø-11 | REV. A

DIST.

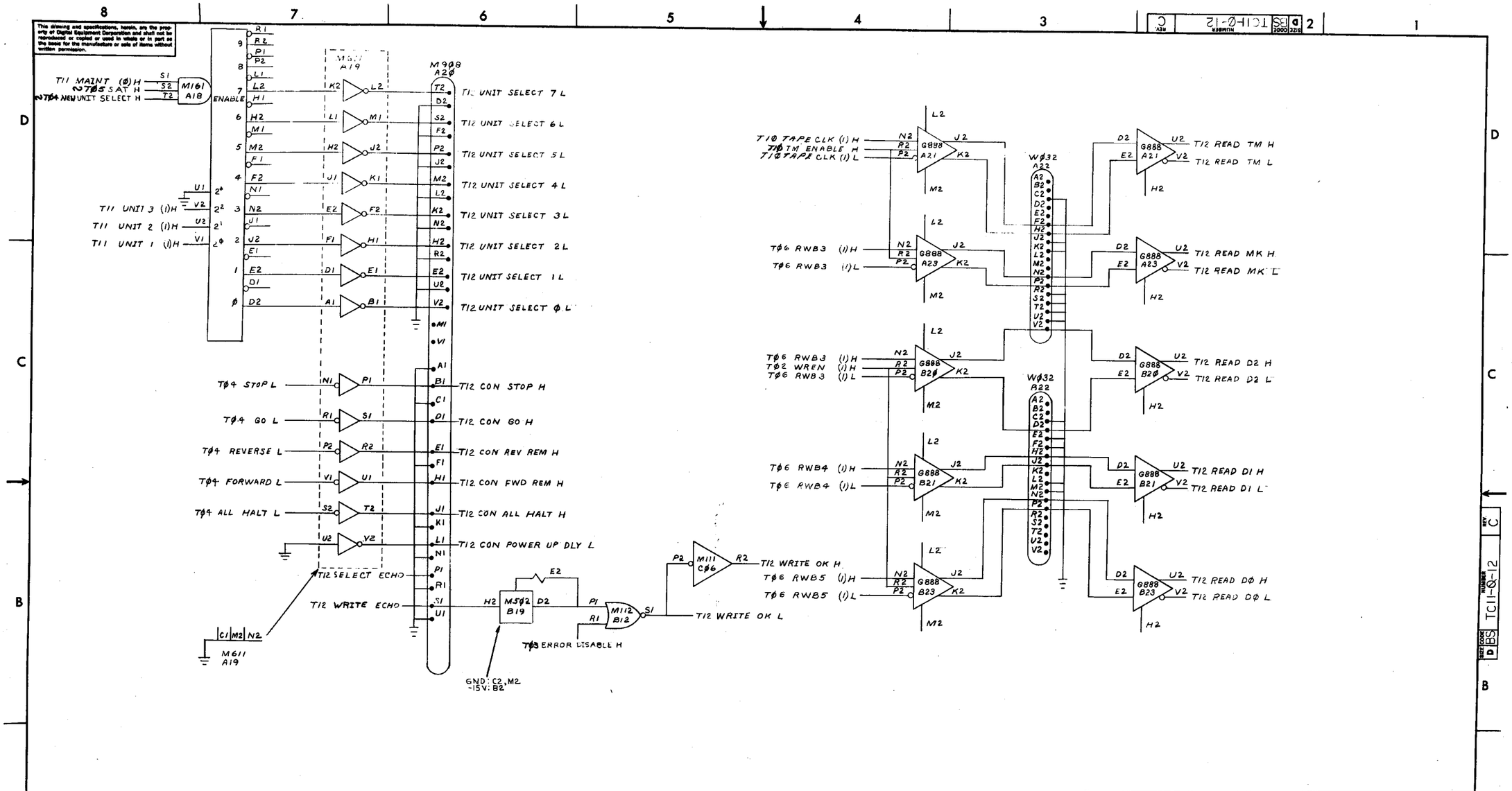

This drawing and specifications, herein, are the property of Digital Equipment Corporation and shall not be reproduced or copied or used in whole or in part as the basis for the manufacture or sale of items without written permission.

REVISIONS		
CHK	CHANGE NO.	REV.
	TC11-00002	A
JANSON		
	TC11-00003	B
JANSON		
	TC11-00008	C
P. JANSON		

FIRST USED ON OPTION/MODEL: PDP-11

UNLESS OTHERWISE SPECIFIED
DIMENSION IN INCHES
TOLERANCES
DECIMALS ± .005 FRACTIONS ± 1/64 ANGLES ± 0°30'
FINAL SURFACE QUALITY
REMOVE BURRS AND BREAK SHARP CORNERS

MATERIAL

FINISH

QTY.	DESCRIPTION	PART NO.	ITEM NO.

PARTS LIST

DRN. J. Vincent DATE 9-8-70
CHK'D DATE 11/3/70
ENG. DATE 11/3/70
PROJ. ENG. DATE 11/3/70
PROD. DATE 11/3/70

NEXT HIGHER ASSY: A-ML-TC11-Ø

SCALE
SHEET 1 OF 1

digital EQUIPMENT CORPORATION
MAYNARD, MASSACHUSETTS

TITLE: TU56 CONNECTIONS

SIZE D | CODE BS | NUMBER TC11-Ø-12 | REV. C

DIST.

DEC FORM NO. DRD 102A

This drawing and specifications, herein, are the property of Digital Equipment Corporation and shall not be reproduced or copied or used in whole or in part as the basis for the manufacture or sale of items without written permission.

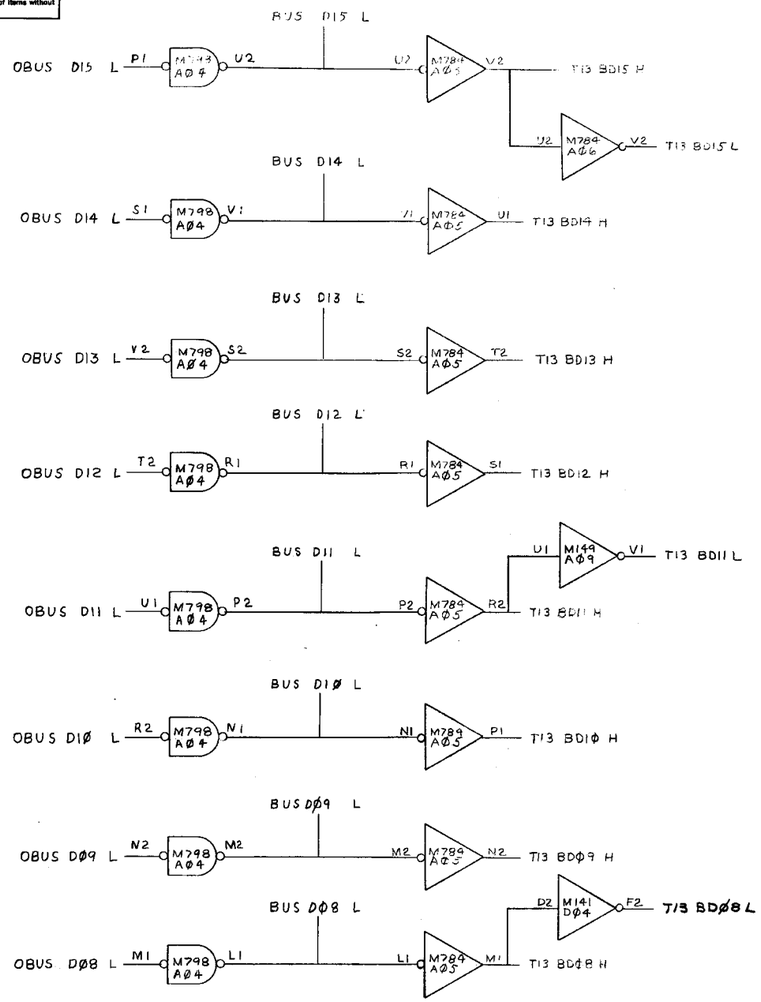

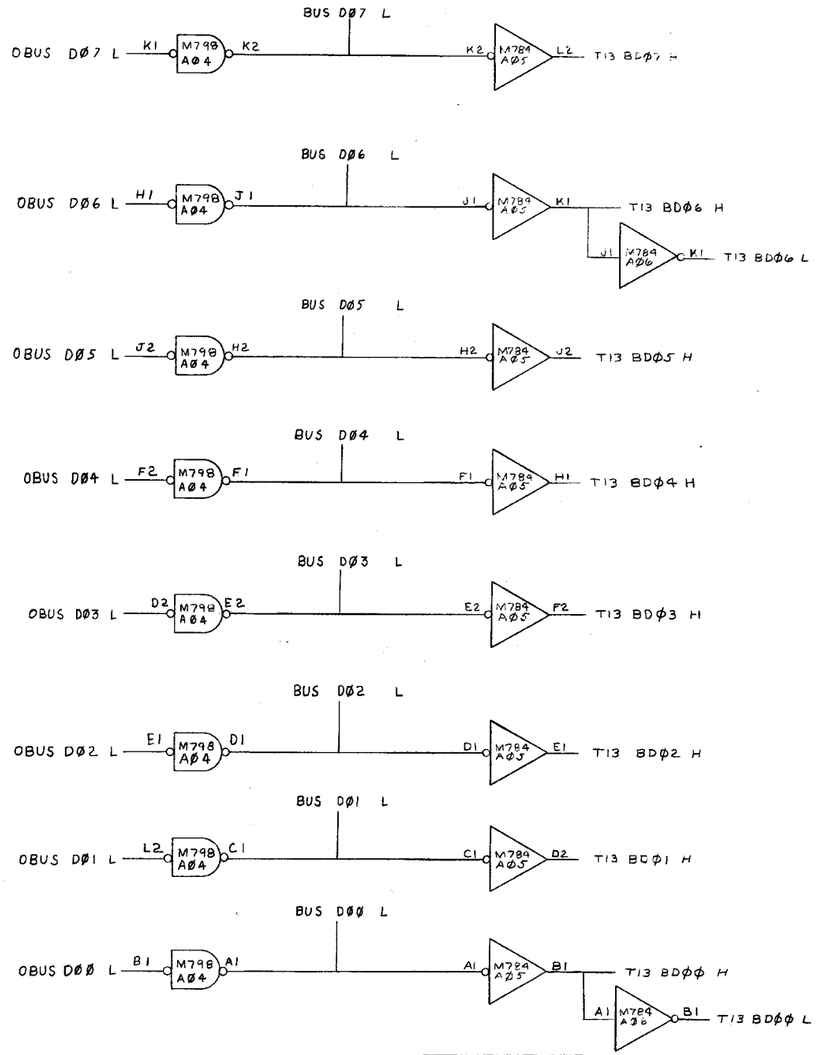

REVISIONS	REV.
CHANGE NO.	
CHK	

DEC FORM NO. DRD 102A

FIRST USED ON OPTION/MODEL	QTY.	DESCRIPTION	PART NO.	ITEM NO.
PDP-11		PARTS LIST		

UNLESS OTHERWISE SPECIFIED

UNLESS OTHERWISE SPECIFIED
DIMENSION IN INCHES
TOLERANCES
DECIMALS ± .005 FRACTIONS ± 1/64 ANGLES ± 0°30'
FINAL SURFACE QUALITY 7
REMOVE BURRS AND BREAK SHARP CORNERS

MATERIAL

FINISH

DRN.		DATE 11/3/70
CH'K'D.		DATE 11/3/70
ENG.		DATE 11/3/70
PROJ. ENG.		DATE 11/3/70
PROD.		DATE 11/3/70

NEXT HIGHER ASSY
A-ML TC11-0

SCALE

SHEET 1 OF 1

digital EQUIPMENT CORPORATION
MAYNARD, MASSACHUSETTS

TITLE
UNIBUS DRIVERS AND RECEIVERS

SIZE	CODE	NUMBER	REV.
D	BS	TC11-0-13	

DIST.

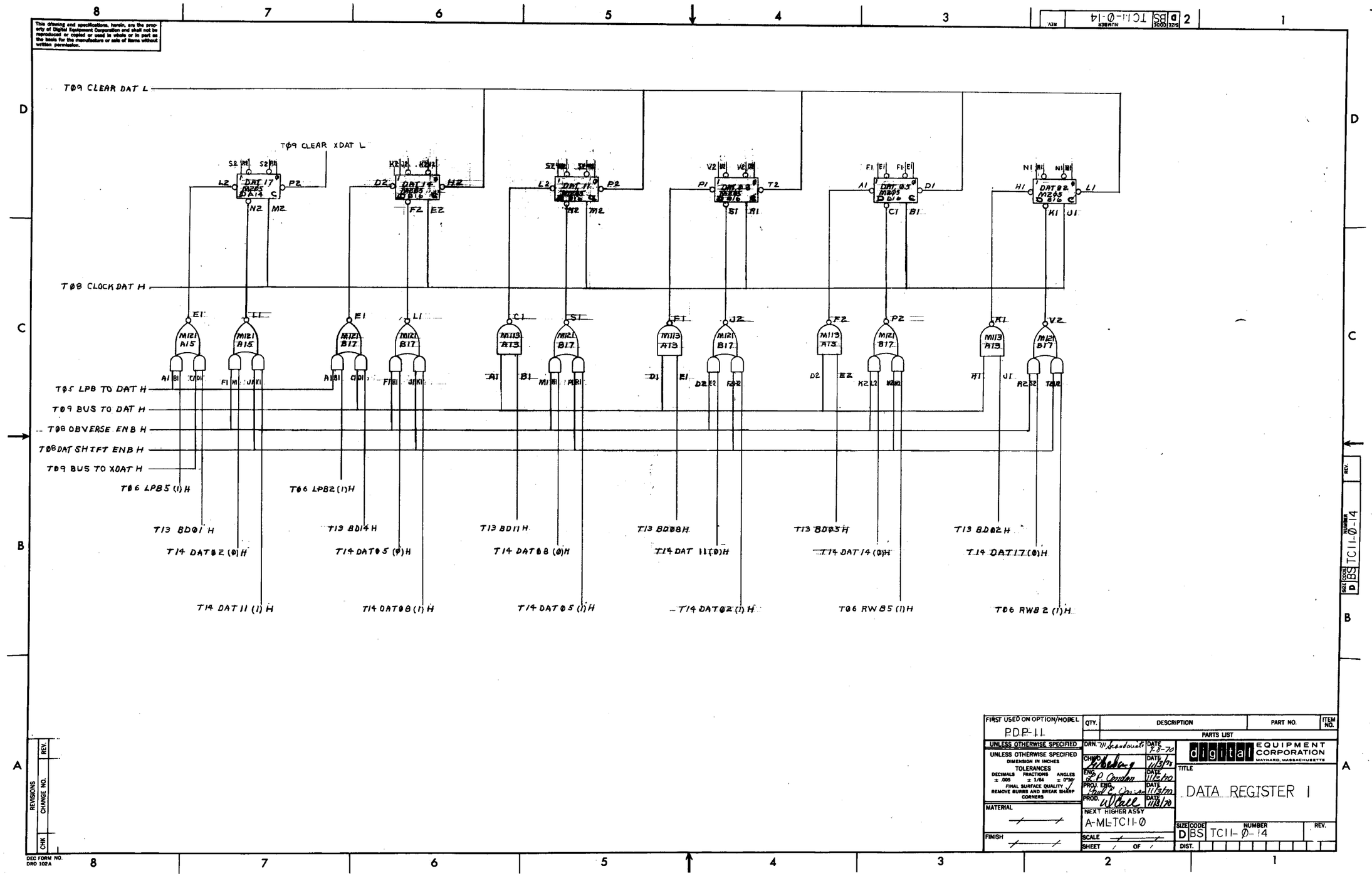

This drawing and specifications, herein, are the property of Digital Equipment Corporation and shall not be reproduced or copied or used in whole or in part as the basis for the manufacture or sale of items without written permission.

FIRST USED ON OPTION/MODEL: PDP-11	QTY.	DESCRIPTION	PART NO. / ITEM NO.
UNLESS OTHERWISE SPECIFIED		PARTS LIST	
UNLESS OTHERWISE SPECIFIED DIMENSION IN INCHES TOLERANCES DECIMALS ± .005 FRACTIONS ± 1/64 ANGLES ± 0°30' FINAL SURFACE QUALITY REMOVE BURRS AND BREAK SHARP CORNERS	DRN. M. Scandurato DATE 7-8-70	digital EQUIPMENT CORPORATION MAYNARD, MASSACHUSETTS	
	CHKD. [signature] DATE 11/3/70	TITLE: DATA REGISTER 1	
	ENG. L.P. Condon DATE 11/3/70		
	PROJ. ENG. [signature] DATE 11/3/70		
MATERIAL	PROD. W. Call DATE 11/3/70		
	NEXT HIGHER ASSY: A-ML-TC11-0	SIZE D CODE BS NUMBER TC11-0-14	REV.
FINISH	SCALE	DIST.	
	SHEET 1 OF 1		

REVISIONS: REV. / CHANGE NO. / CHK

DEC FORM NO. DRD 102A

SIZE D CODE BS NUMBER TC11-0-14 REV.

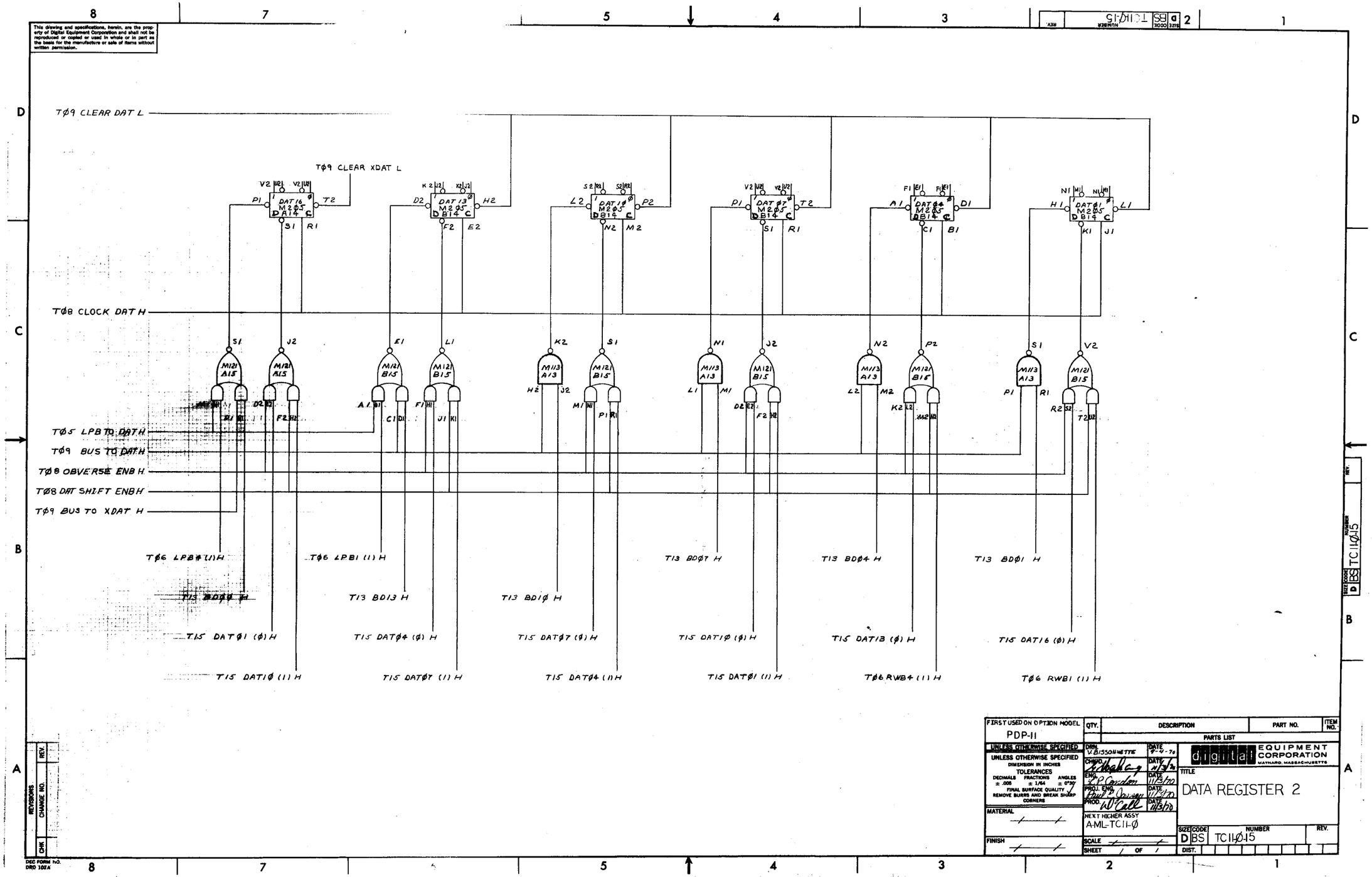

This drawing and specifications, herein, are the property of Digital Equipment Corporation and shall not be reproduced or copied or used in whole or in part as the basis for the manufacture or sale of items without written permission.

FIRST USED ON OPTION MODEL	QTY.	DESCRIPTION	PART NO.	ITEM NO.
PDP-11		PARTS LIST		

UNLESS OTHERWISE SPECIFIED
DIMENSION IN INCHES
TOLERANCES
DECIMALS ± .005 FRACTIONS ± 1/64 ANGLES ± 0°30'
FINAL SURFACE QUALITY
REMOVE BURRS AND BREAK SHARP CORNERS

MATERIAL

FINISH

DRN. V. BISSONNETTE DATE 9-4-70
CHKD. [signature] DATE 11/3/70
ENG. L.P. Condon DATE 11/3/70
PROJ. ENG. Paul F. Jansen DATE 11/3/70
PROD. W. Call DATE 11/3/70

NEXT HIGHER ASSY A-ML-TC11-Ø

SCALE

SHEET 1 OF 1

digital EQUIPMENT CORPORATION
MAYNARD, MASSACHUSETTS

TITLE
DATA REGISTER 2

SIZE D CODE BS NUMBER TC11Ø15 REV.

DIST.

REVISIONS
CHK. CHANGE NO. REV.

DEC FORM NO. DRO 102A

This drawing and specifications, herein, are the property of Digital Equipment Corporation and shall not be reproduced or copied or used in whole or in part as the basis for the manufacture or sale of items without written permission.

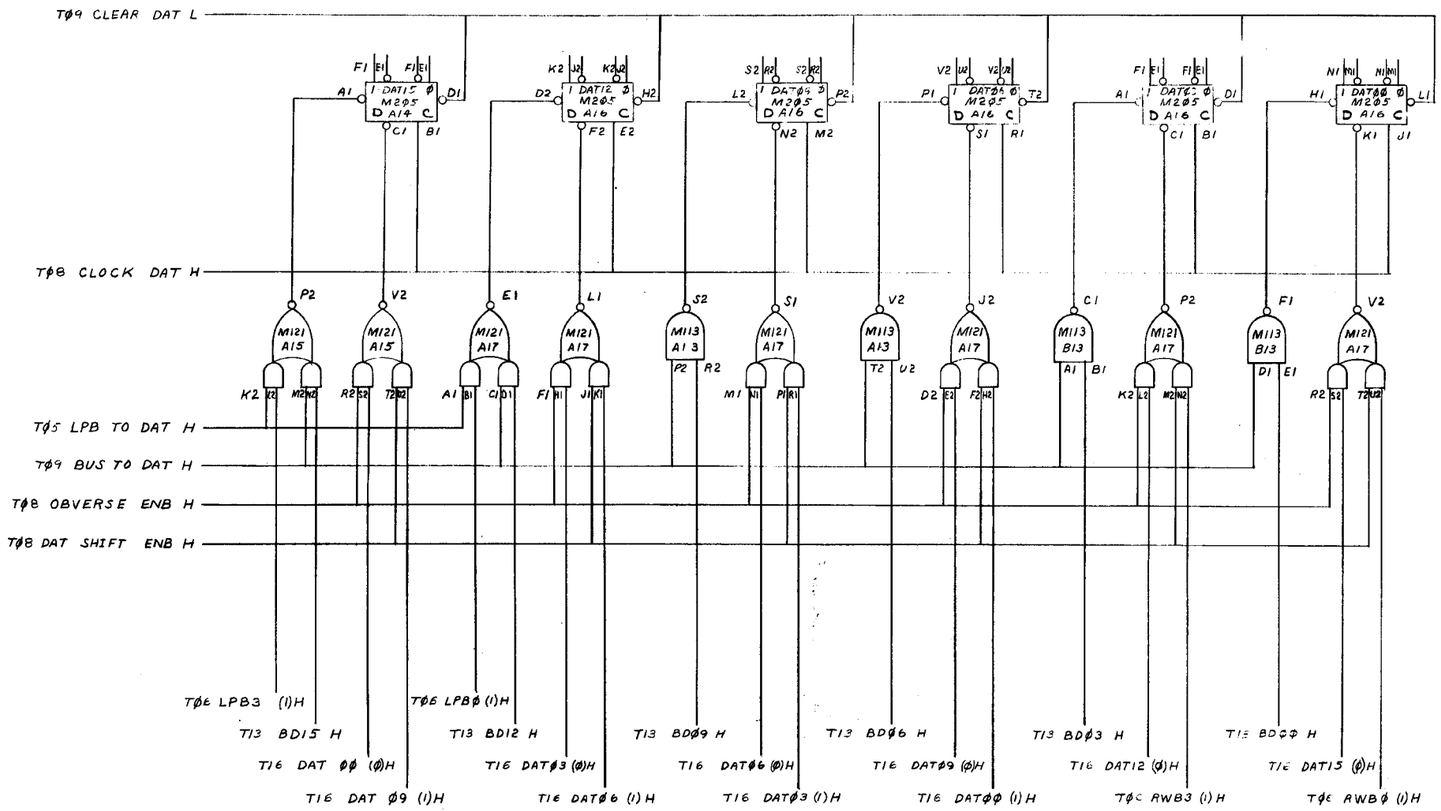

FIRST USED ON OPTION/MODEL	QTY.	DESCRIPTION	PART NO.	ITEM NO.
PDP-11		PARTS LIST		

UNLESS OTHERWISE SPECIFIED
DIMENSION IN INCHES
TOLERANCES
DECIMALS ± .005 FRACTIONS ± 1/64 ANGLES ± 0°30'
FINAL SURFACE QUALITY
REMOVE BURRS AND BREAK SHARP CORNERS

MATERIAL

FINISH

DRN. J. Vincent	DATE 9-9-70	digital EQUIPMENT CORPORATION MAYNARD, MASSACHUSETTS
CHKD. [signature]	DATE 11/3/70	TITLE
ENG. [signature]	DATE 11/3/70	DATA REGISTER 3
PROJ. ENG. [signature]	DATE [illegible]	
PROD. [signature]	DATE 11/3/70	
NEXT HIGHER ASSY A-ML-TC11-Ø		SIZE D CODE BS NUMBER TC11-Ø-16 REV.
SCALE		
SHEET 1 OF 1		DIST.

REVISIONS | CHANGE NO. | REV. | CHK

DEC FORM NO. DRD 102A

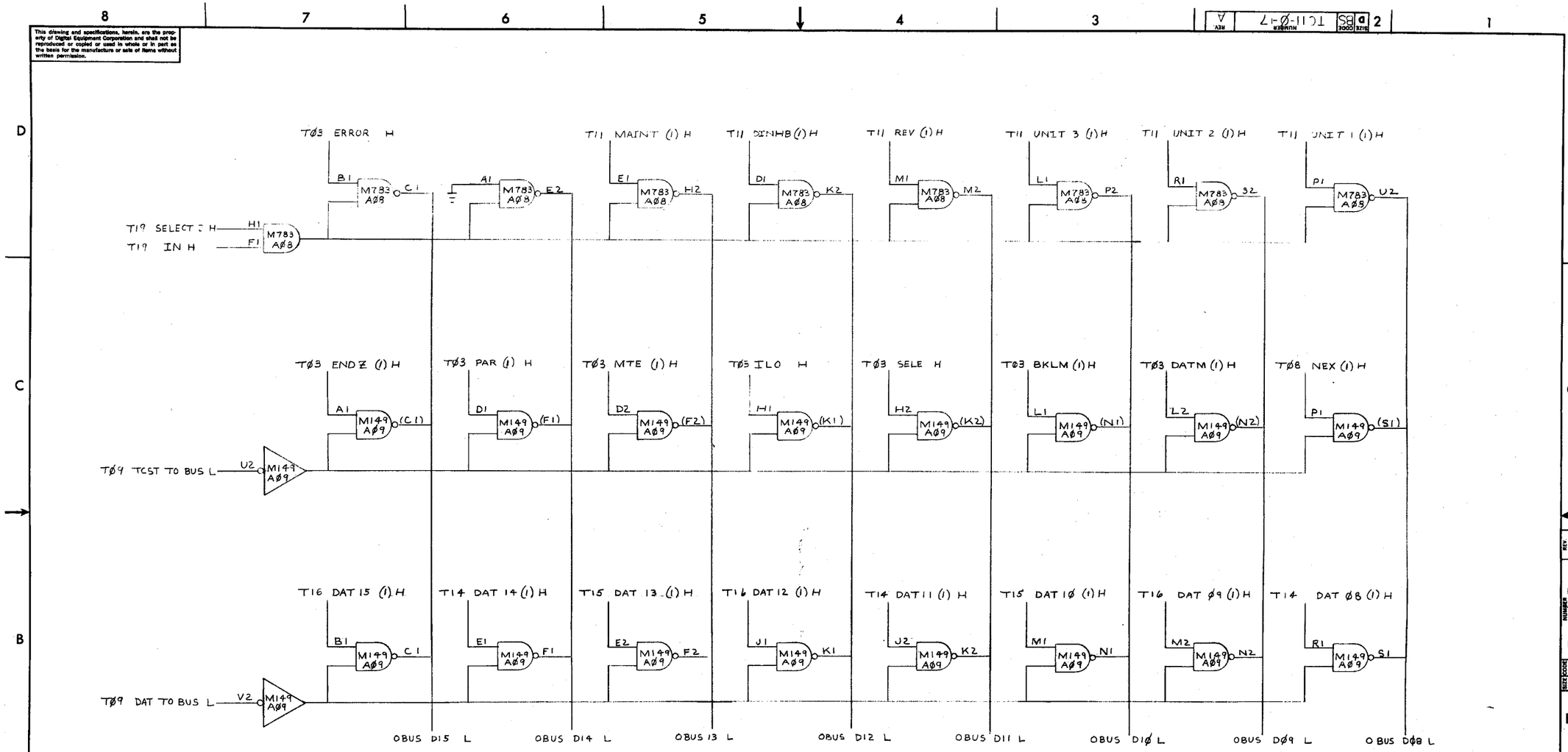

This drawing and specifications, herein, are the property of Digital Equipment Corporation and shall not be reproduced or copied or used in whole or in part as the basis for the manufacture or sale of items without written permission.

REVISIONS		
CHK	CHANGE NO.	REV.
QP	TC11-00002	A

JANSON

DEC FORM NO. DRD 102A

FIRST USED ON OPTION/MODEL	QTY.	DESCRIPTION	PART NO.	ITEM NO.
PDP-11		PARTS LIST		

UNLESS OTHERWISE SPECIFIED
UNLESS OTHERWISE SPECIFIED DIMENSION IN INCHES
TOLERANCES
DECIMALS ± .005 FRACTIONS ± 1/64 ANGLES ± 0°30'
FINAL SURFACE QUALITY
REMOVE BURRS AND BREAK SHARP CORNERS

MATERIAL

FINISH

DRN. E Wilson DATE 8/8/70
CHK'D. DATE 10/3/70
ENG. DATE 1/5/70
PROJ. ENG. DATE 1/5/70
PROD. DATE 11/5/70

NEXT HIGEST ASSY A-ML-TC11-0

SCALE

SHEET 1 OF 1

digital EQUIPMENT CORPORATION MAYNARD, MASSACHUSETTS

TITLE OUTPUT GATING 1

SIZE D CODE BS NUMBER TC11-0-17 REV. A

DIST.

This drawing and specifications, herein, are the property of Digital Equipment Corporation and shall not be reproduced or copied or used in whole or in part as the basis for the manufacture or sale of items without written permission.

T19 SELECT 2 H — H1
T19 IN H — F1
M783 B08

T02 READY(1) H — B1 — C1
T11 INTENB(1) H — A1 — E2
T11 XBA17(1) H — E1 — H2
T11 XBA16(1) H — D1 — K2
T11 FCT3(1) H — N1 — M2
T11 FCT2(1) H — L1 — P2
T11 FCT1(1) H — R2 — S2
P1 — U2

T09 TCST TO BUS L — U2
M149 B09

T04 UPS(1) H — A1 — (C1)
T10 CLK(1) H — D1 — (F1)
T10 MNT(1) H — D2 — (F2)
T06 RWB5(1) H — H1 — (K1)
T06 RWB4(1) H — H2 — (K2)
T06 RWB3(1) H — L1 — (N1)
T14 DAT 17(1) H — L2 — (N2)
T15 DAT 16(1) H — P1 — (S1)

T09 DAT TO BUS L — V2
M149 B09

T15 DAT 07(1) H — B1 — C1
T16 DAT 06(1) H — E1 — F1
T14 DAT 05(1) H — E2 — F2
T15 DAT 04(1) H — J1 — K1
T16 DAT 03(1) H — J2 — K2
T14 DAT 02(1) H — M1 — N1
T15 DAT 01(1) H — M2 — N2
T16 DAT 00(1) H — R1 — S1

O BUS D07 L
O BUS D06 L
O BUS D05 L
O BUS D04 L
O BUS D03 L
O BUS D02 L
O BUS D01 L
O BUS D00 L

FIRST USED ON OPTION/MODEL	PDP-11
UNLESS OTHERWISE SPECIFIED	
UNLESS OTHERWISE SPECIFIED DIMENSION IN INCHES TOLERANCES DECIMALS ± .005 FRACTIONS ± 1/64 ANGLES ± 0°30' FINAL SURFACE QUALITY REMOVE BURRS AND BREAK SHARP CORNERS	
MATERIAL	
FINISH	
DRN.	DATE 9/9/70
CHKD.	DATE 11/3/70
ENG.	DATE
PROJ. ENG.	DATE
PROD.	DATE 11/3/70
NEXT HIGHER ASSY	A-ML-TC11-0
SCALE	
SHEET OF	

QTY. | DESCRIPTION | PART NO. | ITEM NO.
PARTS LIST

digital EQUIPMENT CORPORATION MAYNARD, MASSACHUSETTS

TITLE: OUTPUT GATING 2

SIZE D | CODE BS | NUMBER TC11-0-18 | REV.
DIST.

REVISIONS | REV. | CHANGE NO. | CHK.

DEC FORM NO DRD 102A

SIZE D BS TC11-0-18 REV

This drawing and specifications, herein, are the property of Digital Equipment Corporation and shall not be reproduced or copied or used in whole or in part as the basis for the manufacture or sale of items without written permission.

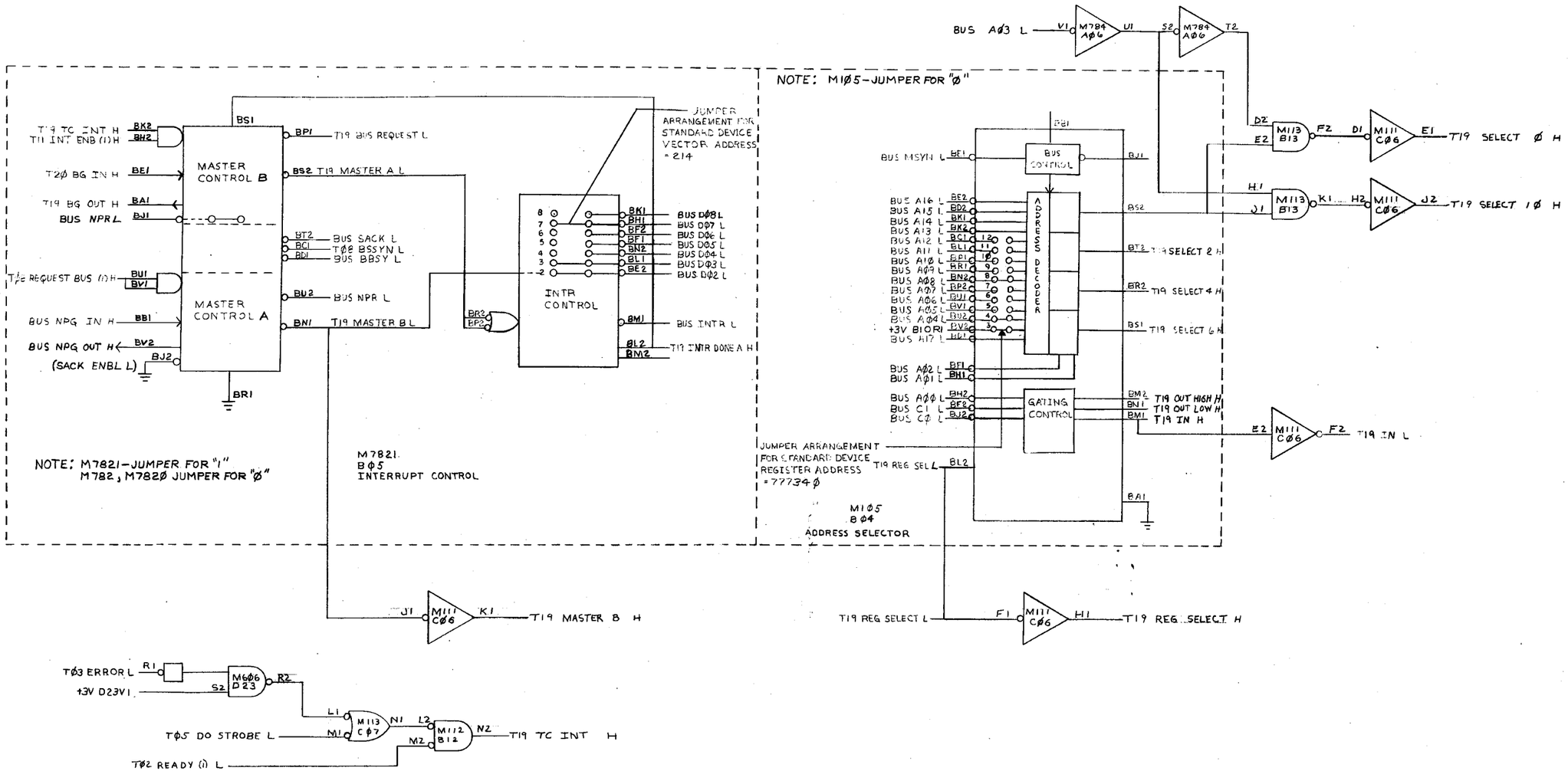

FIRST USED ON OPTION/MODEL	QTY.	DESCRIPTION	PART NO.	ITEM NO.
PDP-11		PARTS LIST		

UNLESS OTHERWISE SPECIFIED
UNLESS OTHERWISE SPECIFIED DIMENSION IN INCHES
TOLERANCES
DECIMALS ± .005 FRACTIONS ± 1/64 ANGLES ± 0°30'
FINAL SURFACE QUALITY
REMOVE BURRS AND BREAK SHARP CORNERS

MATERIAL

FINISH

DRN. E. Wilson DATE 8/9/70
CHK'D G. Hoskins DATE 11/3/70
ENG. R.P. Condon DATE 11/3/70
PROJ. ENG. Paul E. Jansen DATE 11/3/70
PROD. D. Call DATE 11/3/70

NEXT HIGHEST ASSY A-ML-TC11-Ø

SCALE

SHEET 1 OF 1

digital EQUIPMENT CORPORATION
MAYNARD, MASSACHUSETTS

TITLE
ADDR SEL AND INT CONT

SIZE D CODE BS NUMBER TC11-Ø-19 REV. C

DIST.

REVISIONS

CHK	CHANGE NO.	REV.
	TC11-00002	A
	TC11-00006	B
	TC11-00008	C

DEC FORM NO. DRD 102A

This drawing and specifications, herein, are the property of Digital Equipment Corporation and shall not be reproduced or copied or used in whole or in part as the basis for the manufacture or sale of items without written permission.

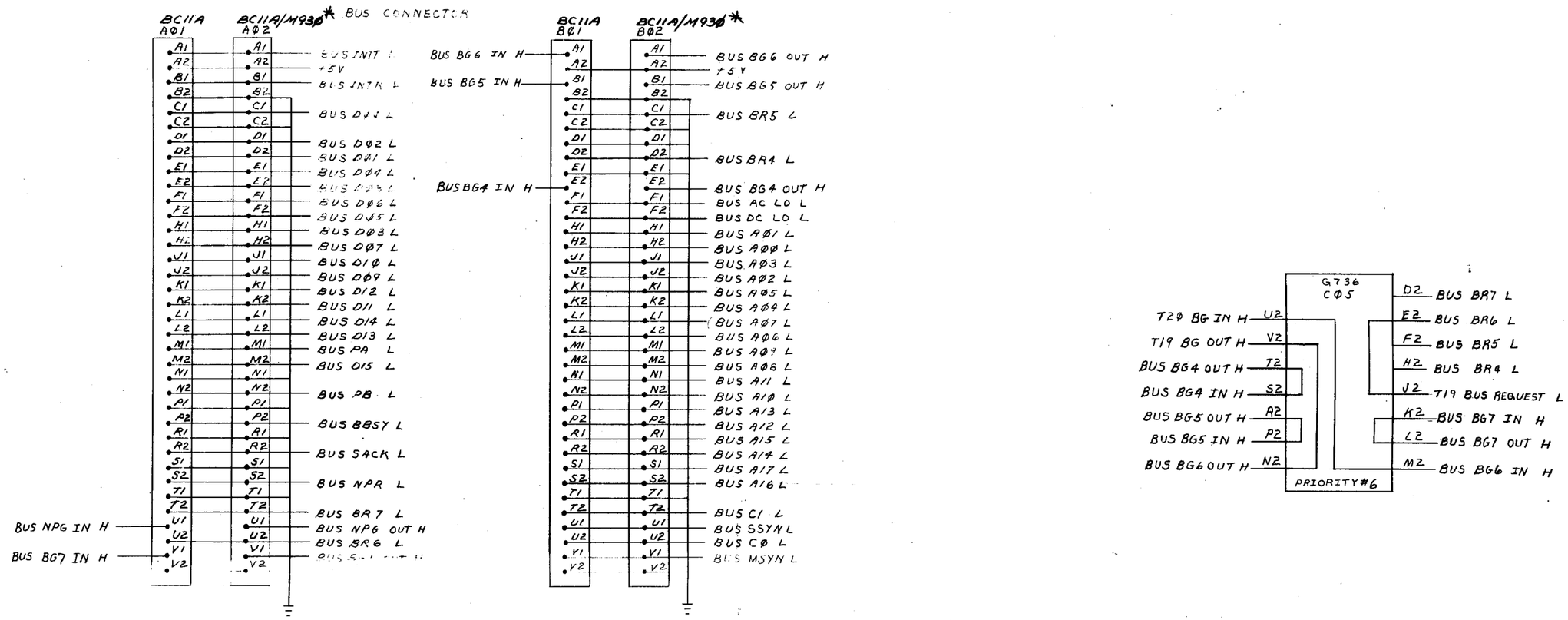

*NOTE:

1. FOR A02/B02 IF TC11 IS THE LAST DEVICE ON THE BUS SLOT A02/B02 HAS IN IT A M930, OTHERWISE IT HAS A BC11A.

QTY.	DESCRIPTION	PART NO.	ITEM NO.
	PARTS LIST		

FIRST USED ON OPTION/MODEL: PDP-11

DO NOT SCALE DRAWING
UNLESS OTHERWISE SPECIFIED
DIMENSION IN INCHES
TOLERANCES
DECIMALS ± .005 FRACTIONS ± 1/64 ANGLES ± 0°30'
FINAL SURFACE QUALITY
REMOVE BURRS AND BREAK SHARP CORNERS

MATERIAL
FINISH

DRN. DATE 9/11/70
CHK'D DATE 11/3/70
ENG. DATE 11/3/70
PROJ. ENG. DATE
PROD. DATE 11/3/70
NEXT HIGHER ASSY LTC-1-7
SCALE
SHEET OF

digital EQUIPMENT CORPORATION
MAYNARD, MASSACHUSETTS

TITLE: BUS CONNECTOR

SIZE D CODE IC NUMBER TC11-0-20 REV.
DIST.

REVISIONS: REV. | CHANGE NO. | CHK

DEC FORM NO. DRD 100

This drawing and specifications, herein, are the property of Digital Equipment Corporation and shall not be reproduced or copied or used in whole or in part as the basis for the manufacture or sale of items without written permission.

M 795
AB Ø7

T08 ADRS TO BUS L BU2

T09 TC8A TO BUS L AD2

AF1

T08 INC BA-WC H AA1

T22 REG CLR L

T09 BUS TO TC8A L BV2

BR1

BU1

BV1

AK2
AJ2 BUS A01 L
AL1 BUS A02 L
AK1 BUS A03 L
AE1 0 BUS D00 L
AJ1 0 BUS D01 L
AL2 0 BUS D02 L
AH2 0 BUS D03 L

AV1 BUS A04 L
AS1 BUS A05 L
AR2 BUS A06 L
AP2 BUS A07 L
BR2 0 BUS D04 L
AR1 0 BUS D05 L
AS2 0 BUS D06 L
AP1 0 BUS D07 L

BK1 BUS A08 L
BE1 BUS A09 L
BD1 BUS A10 L
BB1 BUS A11 L
BN2 0 BUS D08 L
BC1 0 BUS D09 L
BD2 0 BUS D10 L
BA1 0 BUS D11 L

BP1 BUS A12 L
BL1 BUS A13 L
BK2 BUS A14 L
BJ2 BUS A15 L
BM2 0 BUS D12 L
BH2 0 BUS D13 L
BM1 0 BUS D14 L
BJ1 0 BUS D15 L
BP2 T21 BAOF L

AF2 T13 BD03 H
AM1 T13 BD02 H
AH1 T13 BD01 H
AN1 T13 BD00 H

AM2 T13 BD07 H
AJ1 T13 BD06 H
AN2 T13 BD05 H
AT2 T13 BD04 H

AU2 T13 BD11 H
BE2 T13 BD10 H
AV2 T13 BD09 H
BF1 T13 BD08 H

BH1 T13 BD15 H
BN1 T13 BD14 H
BF2 T13 BD13 H
BL2 T13 BD12 H

REVISIONS	REV.	CHANGE NO.	CHK
	A	TC11-00006	JANSON 6-21-71

DEC FORM NO. DRD 102A

FIRST USED ON OPTION/MODEL	QTY.	DESCRIPTION	PART NO.	ITEM NO.
PDP-11		PARTS LIST		

UNLESS OTHERWISE SPECIFIED
UNLESS OTHERWISE SPECIFIED
DIMENSION IN INCHES
TOLERANCES
DECIMALS ± .005 FRACTIONS ± 1/64 ANGLES ± 0°30'
FINAL SURFACE QUALITY / REMOVE BURRS AND BREAK SHARP CORNERS

MATERIAL

FINISH

DRN.	J.H.Leonard	DATE 9-10-70
CHKD.	[illegible]	DATE 11/30/70
ENG.	R.P.Gordon	DATE 11/30/70
PROJ. ENG.	Paul E. Janson	DATE 11/30/70
PROD.	[illegible]	DATE 11/30/70

NEXT HIGHER ASSY
A-ML-TC11-0

SCALE

SHEET 1 OF 1

digital EQUIPMENT CORPORATION
MAYNARD, MASSACHUSETTS

TITLE
BUS ADDRESS REGISTER (TCBA)

SIZE	CODE	NUMBER	REV.
D	BS	TC11-0-21	A

DIST.

This drawing and specifications, herein, are the property of Digital Equipment Corporation and shall not be reproduced or copied or used in whole or in part as the basis for the manufacture or sale of items without written permission.

M795
ABØ7

T09 TCWC TO BUS L — BT2
TØ8 BINIT H — BD1
T22 REG CLR L
+3V A15V1 — BB1
TØ8 INC BR-WC H — BC1
T09 BUS TO TCWC L — AE2 — BS1

O BUS DØØ L — (RE1)
O BUS DØ1 L — (RJ1)
O BUS DØ2 L — (RL2)
O BUS DØ3 L — (RH2)
O BUS DØ4 L — BR2
O BUS DØ5 L — (RA1)
O BUS DØ6 L — (AS2)
O BUS DØ7 L — (RP1)
O BUS DØ8 L — (BN2)
O BUS DØ9 L — (BC1)
O BUS DI0 L — (BD2)
O BUS DI1 L — (BA1)

(BM2) O BUS DI2 L
(BH2) O BUS DI3 L
(BM1) O BUS DI4 L
(BJ1) O BUS DI5 L
BS2 T22 WCOF L

AO BO CO DO
CL2
CL1
ST
DA DB DC DD

(AF2) T13 BDØ3 H
(AN1) T13 BDØ2 H
(AH1) T13 BDØ1 H
(AN1) T13 BDØØ H
(AM2) T13 BDØ7 H
(AU1) T13 BDØ6 H
(AN2) T13 BDØ5 H
(AT2) T13 BDØ4 H
(AU2) T13 BD11 H
(BE2) T13 BDI0 H
(AV2) T13 BDØ9 H
(BF1) T13 BDØ8 H
(BH1) T13 BD15 H
(BN1) T13 BD14 H
(BF2) T13 BD13 H
(BL2) T13 BD12 H

REVISIONS			
	CHANGE NO.	REV.	
CHK.	TC11-00006	A	
Richard Lewis 6-2-71			
JANSON			
P.E. Janson 6-4-71			

FIRST USED ON OPTION/MODEL: PDP11	QTY.	DESCRIPTION	PART NO.	ITEM NO.
		PARTS LIST		

UNLESS OTHERWISE SPECIFIED
UNLESS OTHERWISE SPECIFIED
DIMENSION IN INCHES
TOLERANCES
DECIMALS ± .005 | FRACTIONS ± 1/64 | ANGLES ± 0°30'
FINAL SURFACE QUALITY / REMOVE BURRS AND BREAK SHARP CORNERS
MATERIAL
FINISH

DRN. Margaret Dixie — DATE 9/14/70
CHKD. [illegible] — DATE 11/3/70
ENG. [illegible] — DATE 11/3/70
PROJ ENG. [illegible] — DATE 11/3/70
PROD. [illegible] — DATE 11/3/70
NEXT HIGHER ASSY: A-ML-TC11-Ø
SCALE —
SHEET 1 OF 1

digital EQUIPMENT CORPORATION
MAYNARD, MASSACHUSETTS

TITLE: WORD COUNT REGISTER (TCWC)

SIZE D | CODE BS | NUMBER TC11-Ø-22 | REV. A
DIST.

DEC FORM NO. DRD 102A

This drawing and specifications, herein, are the property of Digital Equipment Corporation and shall not be reproduced or copied or used in whole or in part as the basis for the manufacture or sale of items without written permission.

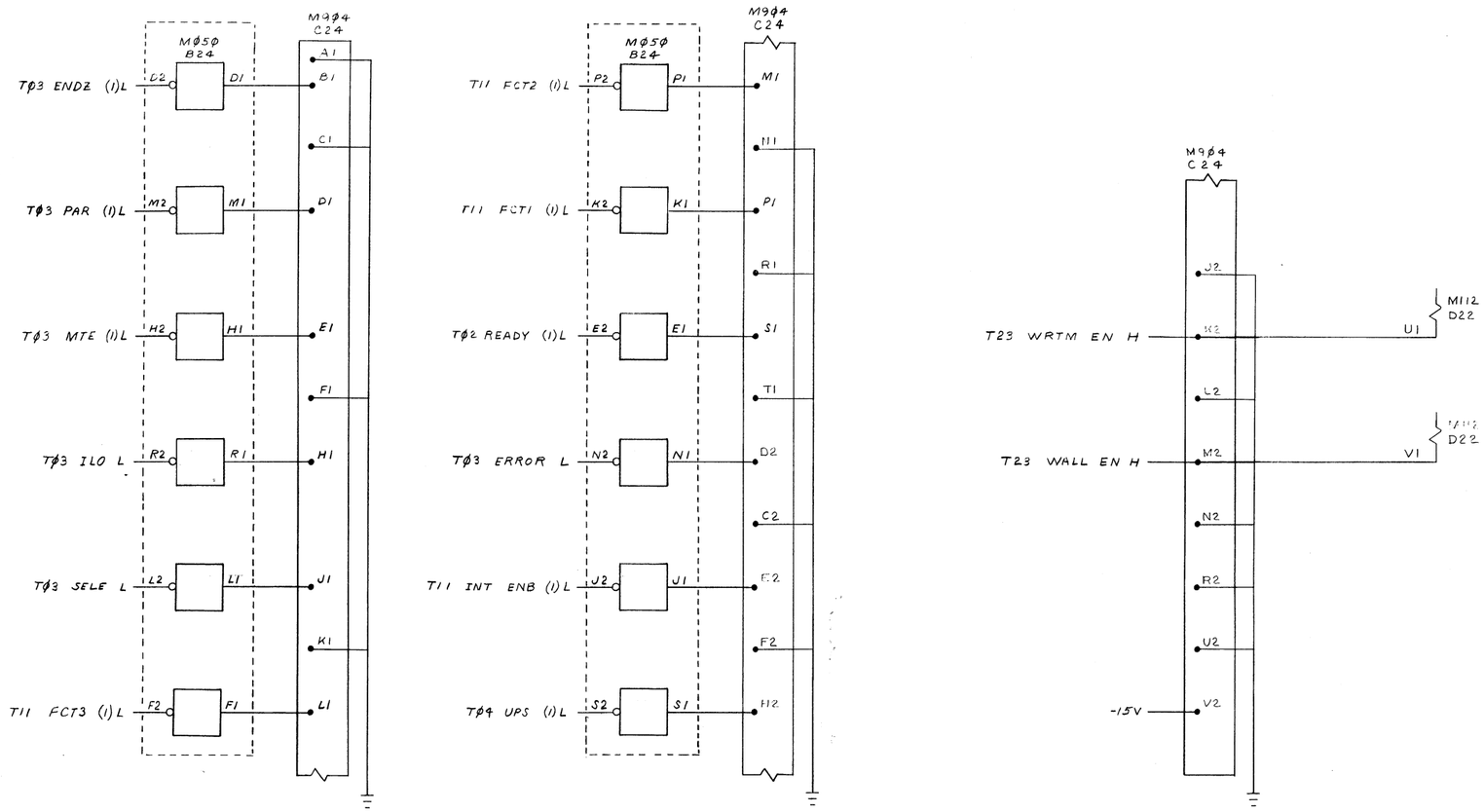

FIRST USED ON OPTION/MODEL	QTY.	DESCRIPTION	PART NO.	ITEM NO.
PDP-11		PARTS LIST		

UNLESS OTHERWISE SPECIFIED
UNLESS OTHERWISE SPECIFIED
DIMENSION IN INCHES
TOLERANCES
DECIMALS ± .005 FRACTIONS ± 1/64 ANGLES ± 0°30'
FINAL SURFACE QUALITY
REMOVE BURRS AND BREAK SHARP CORNERS

MATERIAL

FINISH

DRN. J. Vincent	DATE 9-9-70	
CHK'D. [signature]	DATE 11/3/70	
ENG. [signature]	DATE 11/3/70	
PROJ. ENG. [signature]	DATE 11/3/70	
PROD. [signature]	DATE 11/3/70	

NEXT HIGHER ASSY
A-ML-TC11-Ø

SCALE

SHEET 1 OF 1

digital EQUIPMENT CORPORATION
MAYNARD, MASSACHUSETTS

TITLE
TC11 CONTROL PANEL

SIZE	CODE	NUMBER	REV.
D	BS	TC11-Ø-23	

DIST.

REVISIONS | CHANGE NO. | REV. | CHK

DEC FORM NO. DRD 102A

This drawing and specifications, herein, are the property of Digital Equipment Corporation and shall not be reproduced or copied or used in whole or in part as the basis for the manufacture or sale of items without written permission.

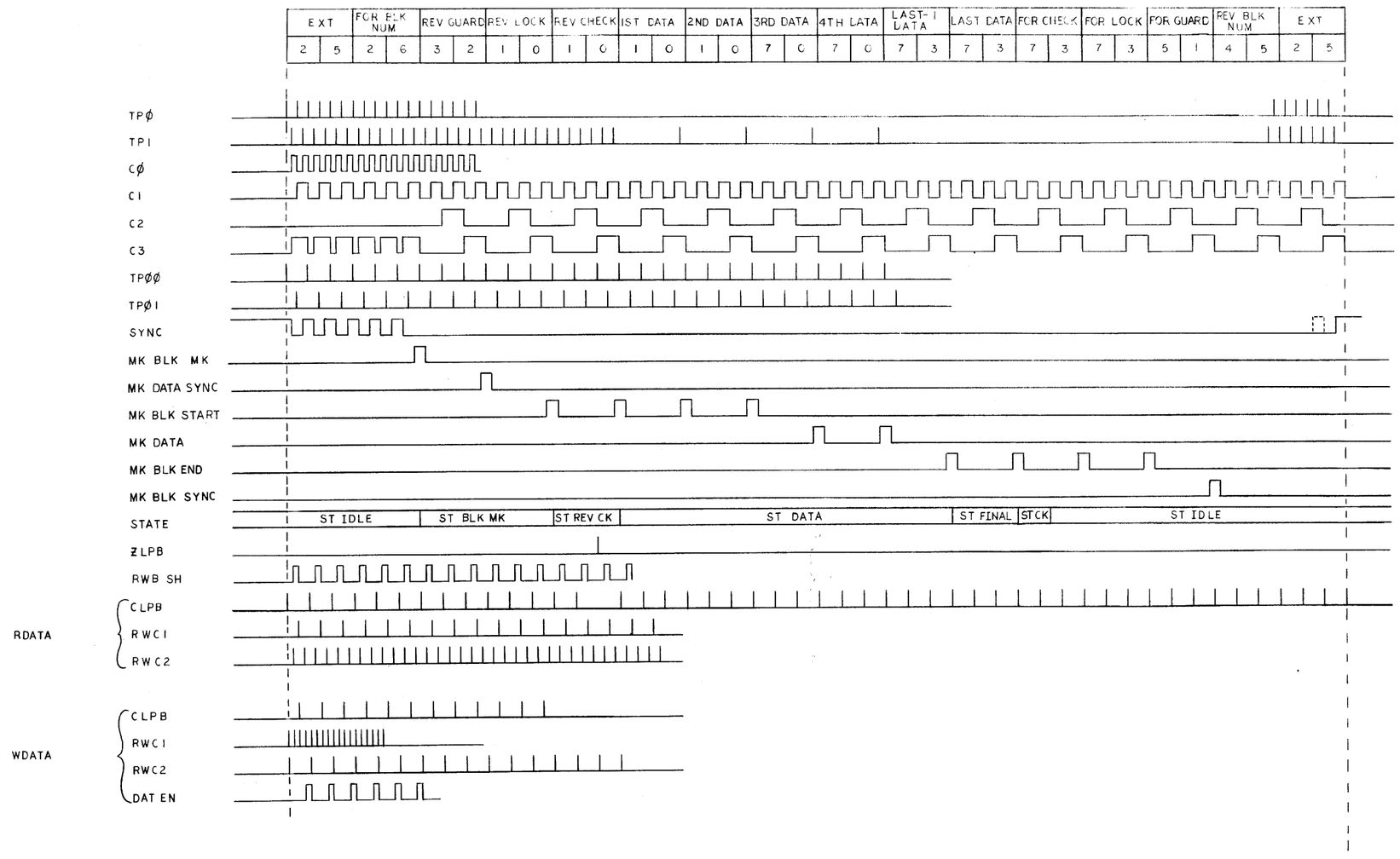

FIRST USED ON OPTION/MODEL	QTY.	DESCRIPTION	PART NO.	ITEM NO.
PDP-11		PARTS LIST		

UNLESS OTHERWISE SPECIFIED

UNLESS OTHERWISE SPECIFIED
DIMENSION IN INCHES
TOLERANCES
DECIMALS ± .005 FRACTIONS ± 1/64 ANGLES ± 0°30'
FINAL SURFACE QUALITY
REMOVE BURRS AND BREAK SHARP CORNERS

MATERIAL

FINISH

DRN.		DATE 10-22-70
CHK'D.		DATE 11/3/70
ENG.		DATE 11/3/70
PROJ. ENG.		DATE 11/3/70
PROD.		DATE 11/3/70

NEXT HIGHER ASSY
A-ML-TC11-Ø

SCALE

SHEET 1 OF 1

digital EQUIPMENT CORPORATION
MAYNARD, MASSACHUSETTS

TITLE
DECTAPE TIMING

SIZE	CODE	NUMBER	REV.
D	TD	TC11-Ø-24	

DIST.

REVISIONS | CHANGE NO. | REV. | CHK

DEC FORM NO. DRD 102A

This drawing and specifications, herein, are the property of Digital Equipment Corporation and shall not be reproduced or copied or used in whole or in part as the basis for the manufacture or sale of items without written permission.

TCII SLAVE RESPONSE

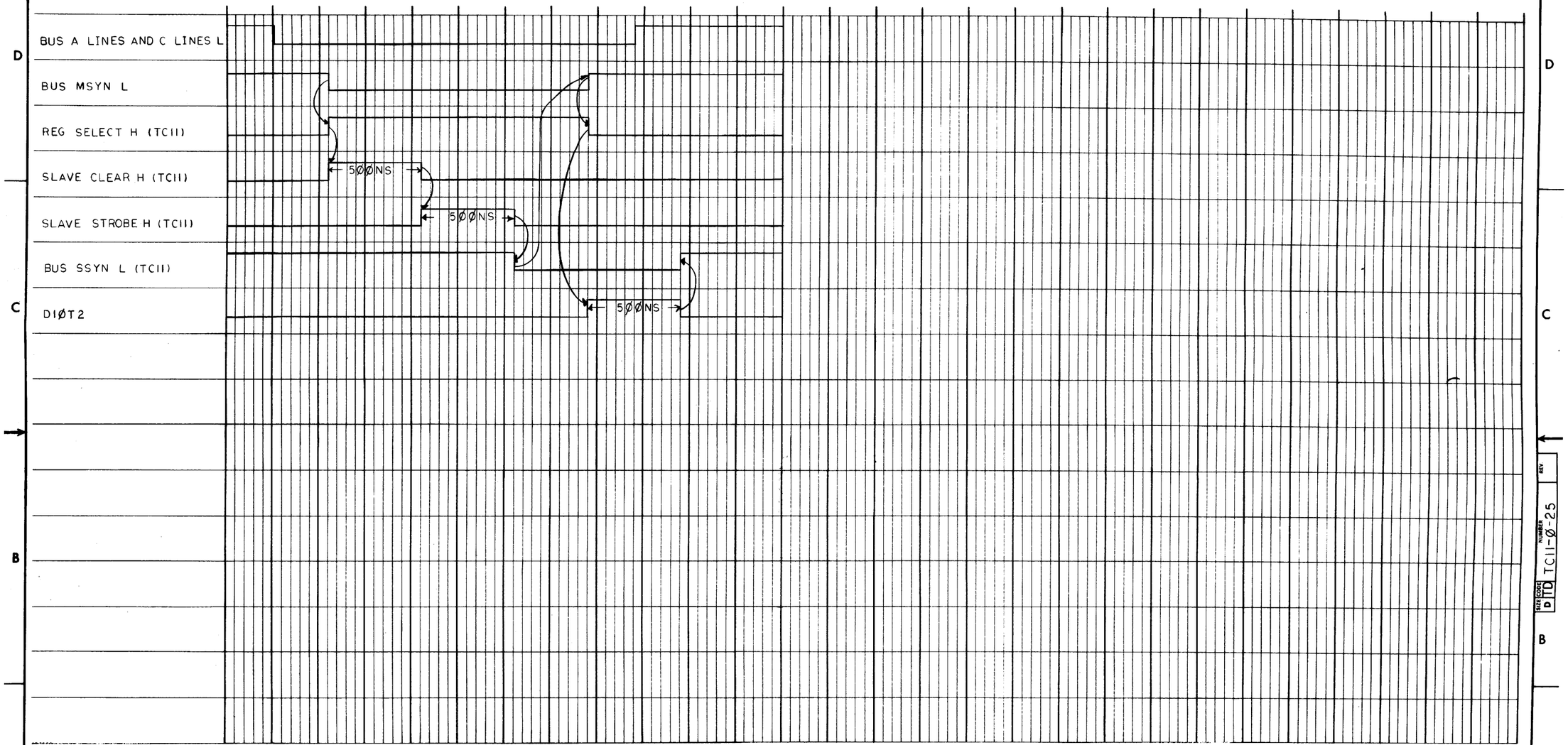

FIRST USED ON OPT/MOD	QTY.	DESCRIPTION	PART NO.	ITEM NO.
PDP-11		PARTS LIST		

UNLESS OTHERWISE SPECIFIED
DIMENSION IN INCHES
TOLERANCES
DECIMALS ± .005 FRACTIONS ± 1/64 ANGLES ± 0°30'
FINAL SURFACE QUALITY
REMOVE BURRS AND BREAK SHARP CORNERS

MATERIAL

FINISH

DRN.		DATE 10-19-70
CHK'D.		DATE 11/3/70
ENG.		DATE 11/3/70
PROJ. ENG.		DATE 11/3/70
PROD.		DATE 11/3/70

NEXT HIGHER ASSY A-ML-TCII-Ø

SCALE NONE

SHEET OF

digital EQUIPMENT CORPORATION MAYNARD, MASSACHUSETTS

TITLE TCII SLAVE RESPONSE

SIZE	CODE	NUMBER	REV.
D	TD	TCII-Ø-25	

DIST.

REVISIONS: REV. | CHANGE NO. | CHK

DEC FORM NO. DRD 102A

This drawing and specifications, herein, are the property of Digital Equipment Corporation and shall not be reproduced or copied or used in whole or in part as the basis for the manufacture or sale of items without written permission.

SIZE D CODE TD NUMBER TC11-Ø-26 REV.

READY AND ERROR SEQUENCE

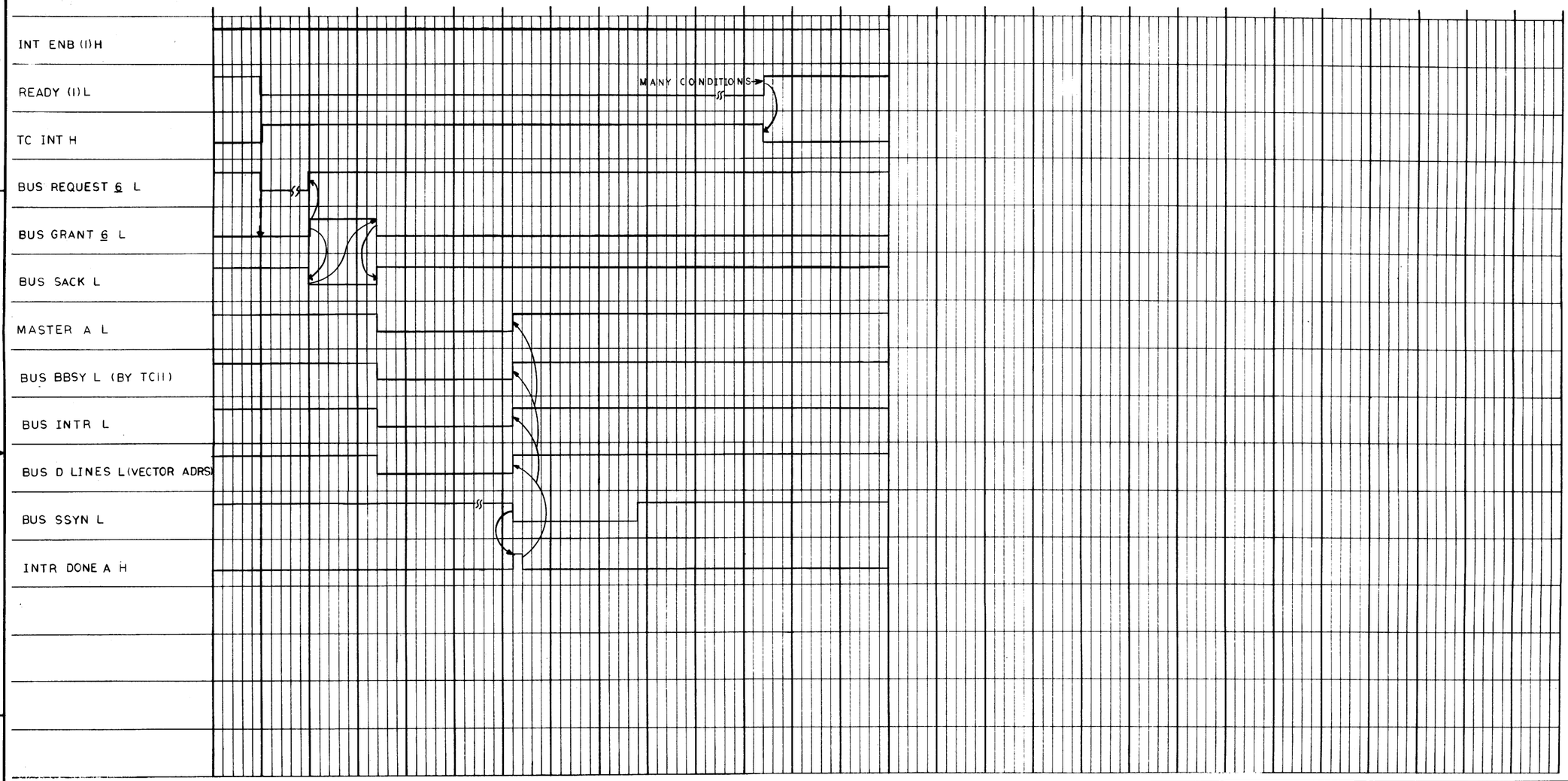

FIRST USED ON OPT/MOD	QTY.	DESCRIPTION	PART NO.	ITEM NO.
PDP-11		PARTS LIST		

UNLESS OTHERWISE SPECIFIED
DIMENSION IN INCHES
TOLERANCES
DECIMALS ± .005 FRACTIONS ± 1/64 ANGLES ± 0°30'
FINAL SURFACE QUALITY
REMOVE BURRS AND BREAK SHARP CORNERS

MATERIAL

FINISH

DRN.	Karen Kryanke	DATE 10-20-70
CHK'D.	G. Vaghay	DATE 11/3/70
ENG.	R.P. Condon	DATE 11/3/70
PROJ. ENG.	Paul E. Jensen	DATE 11/3/70
PROD.	D. Cull	DATE 11/3/70

NEXT HIGHER ASSY
A-ML-TC11-Ø

SCALE NONE
SHEET OF

digital EQUIPMENT CORPORATION
MAYNARD, MASSACHUSETTS

TITLE
READY AND ERROR SEQUENCE

SIZE	CODE	NUMBER	REV.
D	TD	TC11-Ø-26	

DIST.

REVISIONS: REV. / CHANGE NO. / CHK

DEC FORM NO. DRD 102A

This drawing and specifications, herein, are the property of Digital Equipment Corporation and shall not be reproduced or copied or used in whole or in part as the basis for the manufacture or sale of items without written permission.

NPR TRANSFER→DATI

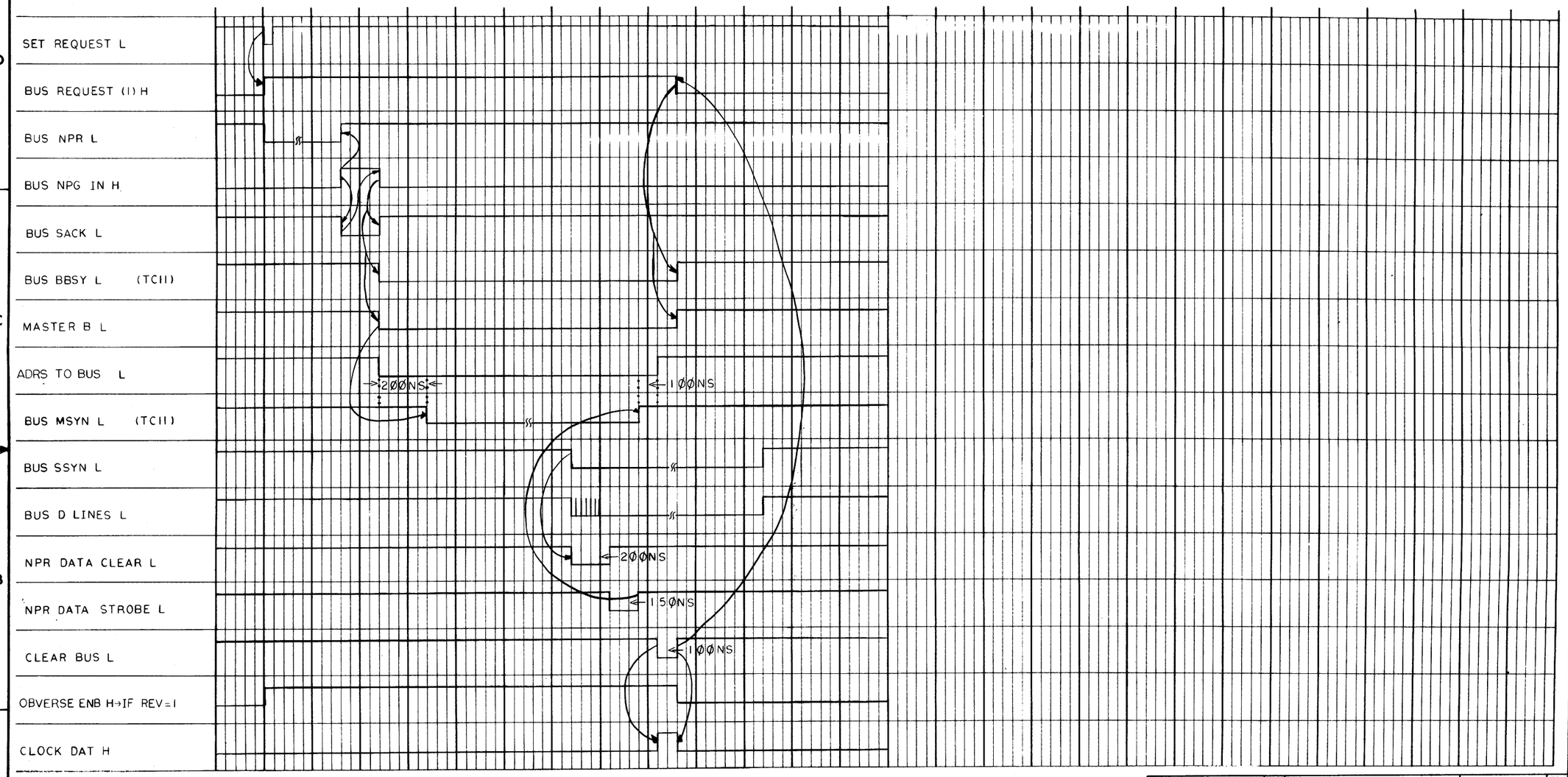

FIRST USED ON OPT/MOD	QTY.	DESCRIPTION	PART NO.	ITEM NO.
PDP-11		PARTS LIST		

UNLESS OTHERWISE SPECIFIED
UNLESS OTHERWISE SPECIFIED
DIMENSION IN INCHES
TOLERANCES
DECIMALS ± .005 FRACTIONS ± 1/64 ANGLES ± 0°30'
FINAL SURFACE QUALITY
REMOVE BURRS AND BREAK SHARP CORNERS

MATERIAL

FINISH

DRN. [signature] DATE 10-20-70
CHK'D. [signature] DATE 11/3/70
ENG. L. P. Condon DATE 11/3/70
PROJ. ENG. Paul E. Davison DATE 11/3/70
PROD. [signature] DATE 11/3/70

NEXT HIGHER ASSY
A-ML-TC11-Ø

SCALE NONE
SHEET OF

digital EQUIPMENT CORPORATION
MAYNARD, MASSACHUSETTS

TITLE
NPR
TRANSFER→DATI

SIZE D CODE TD NUMBER TC11-Ø-27 REV.
DIST.

REVISIONS
REV.
CHANGE NO.
CHK

DEC FORM NO. DRD 102A

This drawing and specifications, herein, are the property of Digital Equipment Corporation and shall not be reproduced or copied or used in whole or in part as the basis for the manufacture or sale of items without written permission.

NPR TRANSFER→DATO

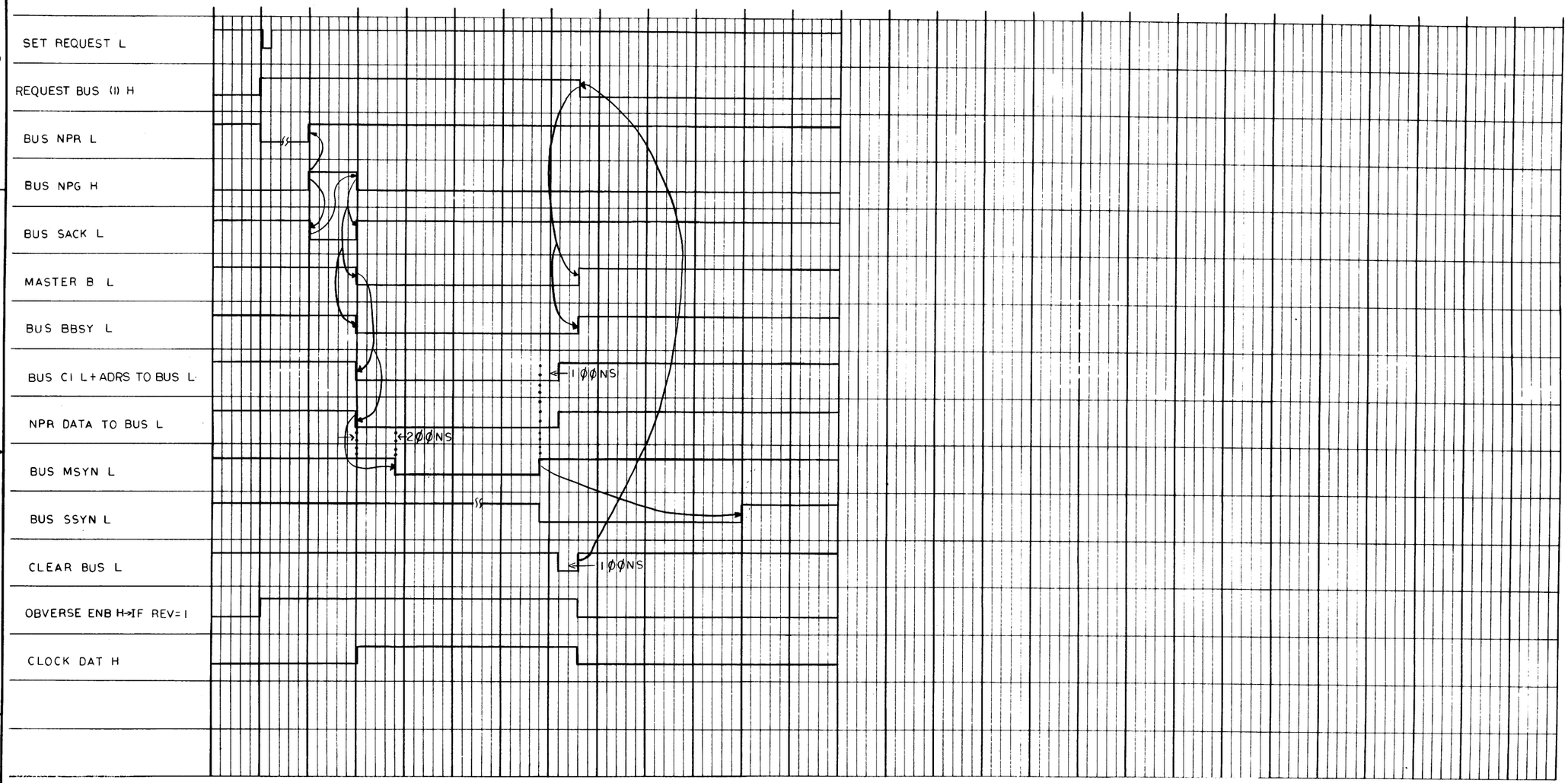

FIRST USED ON OPT/MOD	QTY.	DESCRIPTION	PART NO.	ITEM NO.
PDP-11		PARTS LIST		

UNLESS OTHERWISE SPECIFIED
UNLESS OTHERWISE SPECIFIED DIMENSION IN INCHES
TOLERANCES
DECIMALS ± .005 FRACTIONS ± 1/64 ANGLES ± 0°30'
FINAL SURFACE QUALITY
REMOVE BURRS AND BREAK SHARP CORNERS

MATERIAL

FINISH

DRN.	[signature]	DATE 10-21-70
CHK'D.	[signature]	DATE 11/3/70
ENG.	[signature]	DATE 11/3/70
PROJ. ENG.	Paul E. Janson	DATE 11/3/70
PROD.	[signature]	DATE 11/3/70

NEXT HIGHER ASSY A-ML-TC11-Ø

SCALE NONE

SHEET OF

digital EQUIPMENT CORPORATION MAYNARD, MASSACHUSETTS

TITLE NPR TRANSFER→DATO

SIZE	CODE	NUMBER	REV.
D	TD	TC11-Ø-28	

DIST.

REVISIONS: REV. / CHANGE NO. / CHK

DEC FORM NO. DRD 102A

DRWG NO	REVLTR
K-WL-TC11-Ø-3Ø	F

REVISIONS			
REV LTR	ECO NO	DATE	ENG
A	TC11-00002	2-2-71	
B	TC11-00003	2-25-71	
C	TC11 00006	6-2-71	
D	TC11-00008	12-1-71	
E	TC11-00010	4-13-72	
F	TC11-00011	5-15-72	

DRAWN T. CHUNDA	DATE 10/20/70	digital EQUIPMENT CORPORATION MAYNARD, MASSACHUSETTS
CHECKED G. Vogliano	DATE 11/3/70	
ENG Larry P. Cordes	DATE 11/3/70	
PROJ ENG R.E. Jonson	DATE 11/3/70	
PROG W Call	DATE 11/3/70	

TITLE: DECTAPE CONTROL TC11

FOR TAPE* FILE*

ASSY NO

SIZE	CODE	DWG. NO.	REV LTR
K	WL	TC11-Ø-3Ø	F

SCALE | SHEET OF | DIST.

HN0288,V16(16) 03/31/72

A/P	PIN NAME	ORDER PIN	BAY - ORDER	Q	DRAW	RV	PG	Y	X	Z	REMARKS	LENGTH	EXCEPTIONS	RUN NUMBER
												24-MAY-72	21112	PAGE 1
+3	A13V1	A13V1	1-01 *		T01S					2				1
+3	A13V1	A11U2	1-02 *		T10					1				1
+5	A13V1	A11R1	1-03 *		T11					2				1
+3	A13V1	A11N2	1-04 *		T11					1				1
+5	A13V1	A11K1	1-05 *		T10					2				1
+3	A13V1	A11F2	1-06 *		T10					1				1
+3	A13V1	A11D1	1-07 *		T10					2				1
+3	A13V1	A07B1	1-08 *		T21									1
+5	A13V1		1									22-0/8		1
+3	B10R1	B10L1	1-01 *		T04					2				2
+3	B10R1	B10M1	1-02 *		T10					1				2
+5	B10R1	B10R1	1-03 *		T04S					2				2
+5	B10R1	B04V2	1-04 *		T19									2
+5	B10R1		1									10-4/8		2
+3	B11U1	B11D1	1-01 *		T03					2				3
+3	B11U1	B11L2	1-02 *		T04					1				3
+5	B11U1	B11U1	1-03 *		T01S									3
+3	B11U1		1									6-6/8		3
+3	B13U1	A14D2	1-01 *		T03					1				4
+5	B13U1	B13U1	1-02 *		T01S									4
+3	B13U1		1									7-0/8		4
+3	C04R1	C04N1	1-01 *		T08					2				5
+5	C04R1	C04M1	1-02 *		T08					1				5
+3	C04R1	C04R1	1-03 *		T08S					2				5
+5	C04R1	C04L1	1-04 *		T08									5
+3	C04R1		1									8-0/8		5
+3	C10V1	C10A1	1-01 *		T07					1				6
+5	C10V1	C10V1	1-02 *		T07S									6
+5	C10V1		1									4-4/8		6
+5	C13V1	C13V1	1-01 *		T01S					2				7
+5	C13V1	C12T2	1-02 *		T05					1				7
+5	C13V1	C12S2	1-03 *		T05					2				7
+5	C13V1	C14K1	1-04 *		T06					1				7
+5	C13V1	C14F2	1-05 *		T06					2				7
+5	C13V1	C14D1	1-06 *		T06					1				7
+5	C13V1	C14A1	1-07 *		T06									7
+5	C13V1		1									17-2/8		7

HN0288,V16(16) 03/31/72

A/P	PIN NAME	ORDER PIN	BAY - ORDER	Q	DRAW	RV	PG	Y	X	Z	REMARKS	LENGTH	EXCEPTIONS	RUN NUMBER
												24-MAY-72	21112	PAGE 2
+5	C20U1	C22F1	1-01 *		T02					1				8
+5	C20U1	C22K2	1-02 *		T02					2				8
+3	C20U1	C22R2	1-03 *		T02					1				8
+3	C20U1	C20U1	1-04 *		T01S					2				8
+5	C20U1	D19T2	1-05 *		T02					1				8
+5	C20U1	D19P1	1-06 *		T02									8
+3	C20U1		1									17-6/8		8
+3	C20V1	C22L1	1-01 *		T02					2				9
+5	C20V1	C22S1	1-02 *		T02					1				9
+5	C20V1	C22S2	1-03 *		T02					2				9
+5	C20V1	C22U1	1-04 *		T02					1				9
+3	C20V1	C20V1	1-05 *		T01S									9
+5	C20V1		1									11-4/8		9
+3	C23U1	C23U1	1-01 *		T01S					1				10
+5	C23U1	D23M2	1-02 *		T03									10
+3	C23U1		1									4-4/8		10
+5	D05R1	D05N1	1-01 *		T04					2				11
+3	D05R1	D05M1	1-02 *		T04					1				11
+5	D05R1	D05R1	1-03 *		T04S					2				11
+5	D05R1	D05L1	1-04 *		T04					1				11
+5	D05R1	D05J2	1-05 *		T04									11
+3	D05R1		1									10-6/8		11
+3	D11R1	D11N1	1-01 *		T04					2				12
+3	D11R1	D11M1	1-02 *		T04					1				12
+5	D11R1	D11R1	1-03 *		T04S					2				12
+3	D11R1	D11L1	1-04 *		T04									12
+3	D11R1		1									8-0/8		12
+3	D15V1	D15A1	1-01 *		T05					1				13
+5	D15V1	D15B1	1-02 *		T05					2				13
+3	D15V1	D15C1	1-03 *		T05					1				13
+3	D15V1	D15F1	1-04 *		T07					2				13
+3	D15V1	D14F2	1-05 *		T03					1				13
+5	D15V1	D15H1	1-06 *		T07					2				13
+5	D15V1	D15V1	1-07 *		T07S									13
+3	D15V1		1									16-4/8		13
+3	D20V1	D19H2	1-01 *		T02					1				14
+3	D20V1	D20V1	1-02 *		T01S									14
+5	D20V1		1									4-0/8		14

RUN NAME	A/P PIN	ORDER	BAY - ORDER	PIN NAME	Q	DRAW	RV	PG	Y	X	Z	REMARKS	LENGTH	EXCEPTIONS	RUN NUMBER
*3	D23V1	1-01	*	T01S							1				15
*3	D23V1	1-02	*	T19							2				15
*3	D23V1	1-03	*	T02								6=2/8			15
*3	D23V1	1									1				16
A06D2	A08D2	1-01	*	T08S								7=4/8			16
A06D2	B12R2	1-02	*	T08							1				17
A06D2		1										8=2/8			17
A06L2	A08L2	1-01	*	T02S							1				18
A06L2	C11J1	1-02	*	T02								7=2/8			18
A06L2		1									1				19
A06S1	A08S1	1-01	*	T19S								6=4/8			19
A06S1	B13P2	1-02	*	T19							1				20
A06S1		1									2				20
A06T2	A08T2	1-01	*	T19S								9=2/8			20
A06T2	B13D2	1-02	*	T19							1				21
A06T2		1										2=4/8			21
A06U1	A08S2	1-01	*	T19							1				22
A06U1	A08U1	1-02	*	T19S								2=6/8			22
A06U1	B13H1	1-03	*	T19							1				23
A06U1		1										4=0/8			23
A10D2	A10D2	1-01	*	T10S							1				24
A10D2	A10E2	1-02	*	T10							2				24
A10D2		1										5=6/8			24
A10V2	A10R2	1-01	*	T10							1				25
A10V2	A10V2	1-02	*	T10S								6=6/8			25
A10V2		1													25
A11L1	A11L1	1-01	*	T10S											
A11L1	A14J1	1-02	*	T10											
A11L1		1													
A11M1	A11J1	1-01	*	T10											
A11M1	A11M1	1-02	*	T10S											
A11M1	A11S2	1-03	*	T10											
A11M1		1													
A13C1	A13C1	1-01	*	T14S											
A13C1	B16L2	1-02	*	T14											
A13C1		1													

RUN NAME	A/P PIN	ORDER	BAY - ORDER	PIN NAME	Q	DRAW	RV	PG	Y	X	Z	REMARKS	LENGTH	EXCEPTIONS	RUN NUMBER
A13F1	A13F1	1-01	*	T14S							1				26
A13F1	B16P1	1-02	*	T14								6=4/8			26
A13F1		1									1				27
A13F2	A13F2	1-01	*	T14S								5=0/8			27
A13F2	B16A1	1-02	*	T14							1				28
A13F2		1										5=4/8			28
A13K1	A13K1	1-01	*	T14S							1				29
A13K1	B16H1	1-02	*	T14								5=4/8			29
A13K1		1									1				30
A13K2	A13K2	1-01	*	T15S								5=4/8			30
A13K2	B14L2	1-02	*	T15							1				31
A13K2		1										3=6/8			31
A13N1	A13N1	1-01	*	T15S							1				32
A13N1	B14P1	1-02	*	T15								4=2/8			32
A13N1		1									1				33
A13N2	A13N2	1-01	*	T15S								4=2/8			33
A13N2	B14A1	1-02	*	T15							1				34
A13N2		1										3=6/8			34
A13S1	A13S1	1-01	*	T15S							1				35
A13S1	B14H1	1-02	*	T15								3=0/8			35
A13S1		1									1				36
A13S2	A13S2	1-01	*	T16S								3=4/8			36
A13S2	A16L2	1-02	*	T16							1				37
A13S2		1										2=6/8			37
A13V2	A13V2	1-01	*	T16S											
A13V2	A16P1	1-02	*	T16											
A13V2		1													
A15E1	A14L2	1-01	*	T14											
A15E1	A15E1	1-02	*	T14S											
A15E1		1													
A15J2	A14S1	1-01	*	T15											
A15J2	A15J2	1-02	*	T15S											
A15J2		1													
A15L1	A14N2	1-01	*	T14											
A15L1	A15L1	1-02	*	T14S											
A15L1		1													

RUN NAME	A/P	PIN NAME	ORDER PIN	BAY - ORDER	Q	DRAW RV PG Y	X	Z	REMARKS	LENGTH	EXCEPTIONS	RUN NUMBER
A15P2		A14A1		1-01 *		T16		1				38
A15P2		A15P2		1-02 *		T16S						38
A15P2				1						4-2/8		38
A15S1		A14P1		1-01 *		T15		1				39
A15S1		A15S1		1-02 *		T15S						39
A15S1				1						3-0/8		39
A15V2		A14C1		1-01 *		T16		1				40
A15V2		A15V2		1-02 *		T16S						40
A15V2				1						4-4/8		40
A17E1		A16D2		1-01 *		T16		1				41
A17E1		A17E1		1-02 *		T16S						41
A17E1				1						2-4/8		41
A17J2		A16S1		1-01 *		T16		1				42
A17J2		A17J2		1-02 *		T16S						42
A17J2				1						3-4/8		42
A17L1		A16F2		1-01 *		T16		1				43
A17L1		A17L1		1-02 *		T16S						43
A17L1				1						3-0/8		43
A17P2		A16C1		1-01 *		T16		1				44
A17P2		A17P2		1-02 *		T16S						44
A17P2				1						4-0/8		44
A17S1		A16N2		1-01 *		T16		1				45
A17S1		A17S1		1-02 *		T16S						45
A17S1				1						2-6/8		45
A17V2		A16K1		1-01 *		T16		1				46
A17V2		A17V2		1-02 *		T16S						46
A17V2				1						3-6/8		46
A18D2		A18D2		1-01 *		T12S		1				47
A18D2		A19A1		1-02 *		T12						47
A18D2				1						2-6/8		47
A18E2		A18E2		1-01 *		T12S		1				48
A18E2		A19D1		1-02 *		T12						48
A18E2				1						2-6/8		48
A18F2		A18F2		1-01 *		T12S		1				49
A18F2		A19J1		1-02 *		T12						49
A18F2				1						2-6/8		49

RUN NAME	A/P	PIN NAME	ORDER PIN	BAY - ORDER	Q	DRAW RV PG Y	X	Z	REMARKS	LENGTH	EXCEPTIONS	RUN NUMBER
A18H2		A18H2		1-01 *		T12S		1				50
A18H2		A19L1		1-02 *		T12						50
A18H2				1						3-0/8		50
A18J2		A18J2		1-01 *		T12S		1				51
A18J2		A19F1		1-02 *		T12						51
A18J2				1						2-6/8		51
A18L2		A18L2		1-01 *		T12S		1				52
A18L2		A19K2		1-02 *		T12						52
A18L2				1						2-6/8		52
A18M2		A18M2		1-01 *		T12S		1				53
A18M2		A19H2		1-02 *		T12						53
A18M2				1						3-0/8		53
A18N2		A18N2		1-01 *		T12S		1				54
A18N2		A19E2		1-02 *		T12						54
A18N2				1						3-4/8		54
A21J2		A21D2		1-01 *		T12		2				55
A21J2		A21J2		1-02 *		T12S		1				55
A21J2		A22F2		1-03 *		T12						55
A21J2				1						5-6/8		55
A21K2		A21E2		1-01 *		T12		2				56
A21K2		A21K2		1-02 *		T12S		1				56
A21K2		A22H2		1-03 *		T12						56
A21K2				1						5-6/8		56
A23J2		A23D2		1-01 *		T12		2				57
A23J2		A23J2		1-02 *		T12S		1				57
A23J2		A22N2		1-03 *		T12						57
A23J2				1						5-6/8		57
A23K2		A23E2		1-01 *		T12		2				58
A23K2		A23K2		1-02 *		T12S		1				58
A23K2		A22P2		1-03 *		T12						58
A23K2				1						5-6/8		58
ADRS TO BUS	H	B00S1		1-01 *		T11		1				59
ADRS TO BUS	H	B00N1		1-02 *		T11		2				59
ADRS TO BUS	H	B00B1		1-03 *		T00S						59
ADRS TO BUS				1						6-6/8		59

RUN NAME	A/P	PIN NAME	ORDER PIN	BAY - ORDER	Q	DRAW RV PG Y	X	Z	REMARKS	LENGTH	EXCEPTIONS	RUN NUMBER
ADRS TO BUS	L	B06F1		1-01 *		T08S		1				60
ADRS TO BUS	L	B07U2		1-02 *		T21						60
ADRS TO BUS				1						4-0/8		60
ALL HALT	L	A19S2		1-01 *		T12		1				61
ALL HALT	L	D20V2		1-02 *		T04S						61
ALL HALT				1						11-0/8		61
B04S2		B13E2		1-01 *		T19		1				62
B04S2		B13J1		1-02 *		T19		2				62
B04S2		B04S2		1-03 *		T19S						62
B04S2				1						9-6/8		62
B07U1		B07U1		1-01 *		T21		1				63
B07U1		B07V1		1-02 *		T21S						63
B07U1				1						2-4/8		63
B10A1		B10A1		1-01 *		T05S		1				64
B10A1		B10C1		1-02 *		T05						64
B10A1				1						2-4/8		64
B10D1		B10D1		1-01 *		T05S		1				65
B10D1		B10D2		1-02 *		T05						65
B10D1				1						2-4/8		65
B10F2		B10F2		1-01 *		T10S		1				66
B10F2		B10N1		1-02 *		T10						66
B10F2				1						3-2/8		66
B10H2		A11H1		1-01 *		T10		1				67
B10H2		B10H2		1-02 *		T10S						67
B10H2				1						5-2/8		67
B10K1		B10K1		1-01 *		T04S		1				68
B10K1		D13A1		1-02 *		T04		2				68
B10K1		D13E1		1-03 *		T04		1				68
B10K1		D23J1		1-04 *		T04						68
B10K1				1						17-6/8		68
B10M2		B10M2		1-01 *		T10S		1				69
B10M2		B10U2		1-02 *		T10						69
B10M2				1						3-0/8		69
B10P1		B10P1		1-01 *		T10S		1				70
B10P1		B10V1		1-02 *		T10						70
B10P1				1						3-0/8		70

RUN NAME	A/P	PIN NAME	ORDER PIN	BAY - ORDER	Q	DRAW RV PG Y	X	Z	REMARKS	LENGTH	EXCEPTIONS	RUN NUMBER
B12C1		B12C1		1-01 *		T10S		1				71
B12C1		C20B1		1-02 *		T10						71
B12C1				1						7-4/8		71
B12F1		A11D2		1-01 *		T10		1				72
B12F1		B12F1		1-02 *		T10S						72
B12F1				1						5-4/8		72
B12V2		B11H1		1-01 *		T08		1				73
B12V2		B12V2		1-02 *		T08S						73
B12V2				1						4-0/8		73
B13C1		A10A1		1-01 *		T16		1				74
B13C1		B13C1		1-02 *		T16						74
B13C1				1						6-0/8		74
B13F1		A10H1		1-01 *		T16		1				75
B13F1		B13F1		1-02 *		T16S						75
B13F1				1						5-4/8		75
B13F2		B13F2		1-01 *		T19S		1				76
B13F2		C00D1		1-02 *		T19						76
B13F2				1						7-0/8		76
B13K1		B13K1		1-01 *		T19S		1				77
B13K1		C00H2		1-02 *		T19						77
B13K1				1						6-4/8		77
B13K2		A14L1		1-01 *		T10		1				78
B13K2		B13K2		1-02 *		T10S						78
B13K2				1						5-2/8		78
B13N2		A14H1		1-01 *		T10		1				79
B13N2		B13N2		1-02 *		T10S						79
B13N2				1						5-6/8		79
B13S1		B13S1		1-01 *		T04S		1				80
B13S1		D11S1		1-02 *		T04		2				80
B13S1		D09S1		1-03 *		T04						80
B13S1				1						13-2/8		80
B13S2		B13S2		1-01 *		T02S		1				81
B13S2		D19P2		1-02 *		T02						81
B13S2				1						8-4/8		81

A/P	PIN NAME	ORDER PIN	BAY - ORDER	Q	DRAW	RV	PG	Y	X	Z	REMARKS	LENGTH	21112 EXCEPTIONS	RUN NUMBER
B13V2	B13V2		1-01 *		T04S					1				82
B13V2	C23B1		1-02 *											82
B13V2			1									7-2/8		82
B15E1	B14D2		1-01 *		T15					1				83
B15E1	B15E1		1-02 *		T15S									83
B15E1			1									2-4/8		83
B15J2	B14S1		1-01 *		T15					1				84
B15J2	B15J2		1-02 *		T15S									84
B15J2			1									3-4/8		84
B15L1	B14F2		1-01 *		T15					1				85
B15L1	B15L1		1-02 *		T15S									85
B15L1			1									3-0/8		85
B15P2	B14C1		1-01 *		T15					1				86
B15P2	B15P2		1-02 *		T15									86
B15P2			1									4-0/8		86
B15S1	B14N2		1-01 *		T15					1				87
B15S1	B15S1		1-02 *		T15S									87
B15S1			1									2-6/8		87
B15V2	B14K1		1-01 *		T15					1				88
B15V2	B15V2		1-02 *		T15S									88
B15V2			1									3-6/8		88
B17E1	B16D2		1-01 *		T14					1				89
B17E1	B17E1		1-02 *		T14S									89
B17E1			1									2-4/8		89
B17J2	B16S1		1-01 *		T14					1				90
B17J2	B17J2		1-02 *		T14S									90
B17J2			1									3-4/8		90
B17L1	B16F2		1-01 *		T14					1				91
B17L1	B17L1		1-02 *		T14S									91
B17L1			1									3-0/8		91
B17P2	B16C1		1-01 *		T14					1				92
B17P2	B17P2		1-02 *		T14S									92
B17P2			1									4-0/8		92
B17S1	B16N2		1-01 *		T14					1				93
B17S1	B17S1		1-02 *		T14S									93
B17S1			1									2-6/8		93

A/P	PIN NAME	ORDER PIN	BAY - ORDER	Q	DRAW	RV	PG	Y	X	Z	REMARKS	LENGTH	21112 EXCEPTIONS	RUN NUMBER
B17V2	B16K1		1-01 *		T14					1				94
B17V2	B17V2		1-02 *		T14S									94
B17V2			1									3-6/8		94
B18U2	B18U2		1-01 *		T03S					1				95
B18U2	D13P2		1-02 *		T03									95
B18U2			1									8-2/8		95
B19D2	B19D2		1-01 *		T12S					1				96
B19D2	B19E2		1-02 *		T12					2				96
B19D2	B12P1		1-03 *		T12									96
B19D2			1									9-0/8		96
B20J2	A22V2		1-01 *		T12					1				97
B20J2	B20D2		1-02 *		T12					2				97
B20J2	B20J2		1-03 *		T12S									97
B20J2			1									6-4/8		97
B20K2	B20K2		1-01 *		T12S					2				98
B20K2	B20E2		1-02 *		T12					1				98
B20K2	B22D2		1-03 *		T12									98
B20K2			1									6-2/8		98
B21J2	B21D2		1-01 *		T12					2				99
B21J2	B21J2		1-02 *		T12S					1				99
B21J2	B22H2		1-03 *		T12									99
B21J2			1									5-4/8		99
B21K2	B21E2		1-01 *		T12					2				100
B21K2	B21K2		1-02 *		T12S					1				100
B21K2	B22J2		1-03 *		T12									100
B21K2			1									5-6/8		100
B23J2	B23D2		1-01 *		T12					2				101
B23J2	B23J2		1-02 *		T12S					1				101
B23J2	B22N2		1-03 *		T12									101
B23J2			1									5-6/8		101
B23K2	B23E2		1-01 *		T12					2				102
B23K2	B23K2		1-02 *		T12S					1				102
B23K2	B22P2		1-03 *		T12									102
B23K2			1									5-6/8		102
B24D1	B24D1		1-01 *		T24S					1				103
B24D1	C24B1		1-02 *		T24									103
B24D1			1									4-4/8		103

RUN NAME	A/P	PIN NAME	ORDER PIN	BAY - ORDER	Q	DRAW RV PG Y	X	Z	REMARKS	LENGTH	EXCEPTIONS	RUN NUMBER
B24E1		B24E1		1-01 *		T24S		1				104
B24E1		C24S1		1-02 *		T24						104
B24E1				1						6-0/8		104
B24F1		B24F1		1-01 *		T24S		1				105
B24F1		C24L1		1-02 *		T24						105
B24F1				1						5-2/8		105
B24H1		B24H1		1-01 *		T24S		1				106
B24H1		C24E1		1-02 *		T24						106
B24H1				1						4-4/8		106
B24J1		B24J1		1-01 *		T24S		1				107
B24J1		C24E2		1-02 *		T24						107
B24J1				1						4-4/8		107
B24K1		B24K1		1-01 *		T24S		1				108
B24K1		C24P1		1-02 *		T24						108
B24K1				1						5-2/8		108
B24L1		B24L1		1-01 *		T24S		1				109
B24L1		C24J1		1-02 *		T24						109
B24L1				1						4-4/8		109
B24M1		B24M1		1-01 *		T24S		1				110
B24M1		C24D1		1-02 *		T24						110
B24M1				1						4-0/8		110
B24N1		B24N1		1-01 *		T24S		1				111
B24N1		C24D2		1-02 *		T24						111
B24N1				1						4-0/8		111
B24P1		B24P1		1-01 *		T24S		1				112
B24P1		C24M1		1-02 *		T24						112
B24P1				1						4-4/8		112
B24R1		B24R1		1-01 *		T24S		1				113
B24R1		C24H1		1-02 *		T24						113
B24R1				1						4-0/8		113
B24S1		B24S1		1-01 *		T24S		1				114
B24S1		C24H2		1-02 *		T24						114
B24S1				1						4-0/8		114
BA0F	L	A12H2		1-01 *		T11		1				115
BA0F	L	B07P2		1-02 *		T21S						115
BA0F				1						7-0/8		115

RUN NAME	A/P	PIN NAME	ORDER PIN	BAY - ORDER	Q	DRAW RV PG Y	X	Z	REMARKS	LENGTH	EXCEPTIONS	RUN NUMBER
BD00	H	A09B1		1-01 *		T13S		1				116
BD00	H	A06A1		1-02 *		T13		2				116
BD00	H	A07N1		1-03 *		T21S/T22S		1				116
BD00	H	A15R1		1-04 *		T15		2				116
BD00	H	B13E1		1-05 *		T16		1				116
BD00	H	C21D2		1-06 *		T05						116
BD00				1						25-4/8		116
BD00	L	A06B1				T13S					1-PIN RUN	117
BD01	H	A05D2		1-01 *		T13S		2				118
BD01	H	A07H1		1-02 *		T21S/T22S		1				118
BD01	H	A12E1		1-03 *		T11		2				118
BD01	H	A15D1		1-04 *		T14		1				118
BD01	H	A13R1		1-05 *		T15						118
BD01				1						16-2/8		118
BD02	H	A05E1		1-01 *		T13S		2				119
BD02	H	A07M1		1-02 *		T21S/T22S		1				119
BD02	H	A12R1		1-03 *		T11		2				119
BD02	H	A13J1		1-04 *		T14		1				119
BD02	H	C17H1		1-05 *		T06						119
BD02				1						20-4/8		119
BD03	H	A05F2		1-01 *		T13S		2				120
BD03	H	A07F2		1-02 *		T21S/T22S		1				120
BD03	H	A12D1		1-03 *		T11		2				120
BD03	H	B13B1		1-04 *		T16		1				120
BD03	H	C17D2		1-05 *		T06						120
BD03				1						19-0/8		120
BD04	H	A05H1		1-01 *		T13S		2				121
BD04	H	A07T2		1-02 *		T21S/T22S		1				121
BD04	H	A12M1		1-03 *		T11		2				121
BD04	H	A13M2		1-04 *		T15		1				121
BD04	H	C17D1		1-05 *		T06						121
BD04				1						19-4/8		121
BD05	H	A05J2		1-01 *		T13S		2				122
BD05	H	A07N2		1-02 *		T21S/T22S		1				122
BD05	H	A11C1		1-03 *		T10		2				122
BD05	H	A12K1		1-04 *		T11		1				122
BD05	H	A13E2		1-05 *		T14						122
BD05				1						14-4/8		122

A/P	PIN NAME	ORDER PIN	BAY - ORDER	Q	DRAW RV PG Y	X	Z	REMARKS	LENGTH	21112 EXCEPTIONS	RUN NUMBER
H	A05K1		1-01 *		T13S		1				123
H	A06J1		1-02 *		T13		2				123
H	A07U1		1-03 *		T21S/T22S		1				123
H	A12P1		1-04 *		T11		2				123
H	A13U2		1-05 *		T16		1				123
H	B13H2		1-06 *		T10						123
			1						18-6/8		123
L	A06K1		1-01 *		T13S		1				124
L	B13L2		1-02 *		T10						124
			1						7-4/8		124
H	A05L2		1-01 *		T13S		2				125
H	A07M2		1-02 *		T21S/T22S		1				125
H	A13M1		1-03 *		T15						125
			1						8-2/8		125
H	A12A1		1-01 *		T11		1				126
H	A13E1		1-02 *		T14		2				126
H	A05M1		1-03 *		T13S		1				126
H	B07F1		1-04 *		T21S/T22S		2				126
H	D04D2		1-05 *		T13		1				126
H	D04H1		1-06 *		T04						126
			1						25-6/8		126
L	D04F2		1-01 *		T13S		1				127
L	D04K2		1-02 *		T04						127
			1						2-6/8		127
H	A13R2		1-01 *		T16		2				128
H	A12V1		1-02 *		T11		1				128
H	A07V2		1-03 *		T21S/T22S		2				128
H	A05N2		1-04 *		T13S		1				128
H	D04N2		1-05 *		T04		2				128
H	D04V1		1-06 *		T04						128
			1						25-2/8		128
H	A12B1		1-01 *		T11		2				129
H	A13J2		1-02 *		T15		1				129
H	A05P1		1-03 *		T13S		2				129
H	B07E2		1-04 *		T21S/T22S		1				129
H	D04R2		1-05 *		T04		2				129
H	D04V2		1-06 *		T04						129
			1						27-2/8		129

A/P	PIN NAME	ORDER PIN	BAY - ORDER	Q	DRAW RV PG Y	X	Z	REMARKS	LENGTH	21112 EXCEPTIONS	RUN NUMBER
H	A13B1		1-01 *		T14		1				130
H	A11P1		1-02 *		T11		2				130
H	A09U1		1-03 *		T13		1				130
H	A07U2		1-04 *		T21S/T22S		2				130
H	A05R2		1-05 *		T13S		1				130
H	D04D1		1-06 *		T04						130
			1						23-6/8		130
L	A09V1		1-01 *		T13S		1				131
L	D04E1		1-02 *		T04						131
			1						9-6/8		131
H	A17D1		1-01 *		T16		1				132
H	A12U1		1-02 *		T11		2				132
H	A05S1		1-03 *		T13S		1				132
H	B07L2		1-04 *		T21S/T22S						132
			1						16-6/8		132
H	B07F2		1-01 *		T21S/T22S		2				133
H	A05T2		1-02 *		T13S		1				133
H	A11M2		1-03 *		T11		2				133
H	B15D1		1-04 *		T15						133
			1						14-6/8		133
H	A05U1		1-01 *		T13S		2				134
H	B07N1		1-02 *		T21S/T22S		1				134
H	B17D1		1-03 *		T14						134
			1						12-6/8		134
H	A15N2		1-01 *		T16		2				135
H	A09V2		1-02 *		T13S		1				135
H	A06U2		1-03 *		T13		2				135
H	B07H1		1-04 *		T21S/T22S						135
			1						14-4/8		135
L	A06V2		1-01 *		T13S		1				136
L	D06U2		1-02 *		T03						136
			1						10-2/8		136
H	B12P2		1-01 *		T08		1				137
H	A06J2		1-02 *		T08S						137
			1						7-0/8		137
H	B05E1		1-01 *				1				138
H	C05U2		1-02 *		T20S						138
			1						6-4/8		138

RUN NAME	A/P	PIN NAME	ORDER PIN	BAY - ORDER	Q	DRAW RV PG Y	X	Z	REMARKS	LENGTH	EXCEPTIONS	RUN NUMBER
BG OUT	H	B05A1		1-01 *				1				139
BG OUT	H	C05V2		1-02 *		T20S						139
BG OUT				1						7-2/8		139
BINIT	H	B06J1		1-01 *		T08		1				140
BINIT	H	A07D1		1-02 *		T22		2				140
BINIT	H	A12H1		1-03 *		T11		1				140
BINIT	H	A12J2		1-04 *		T11		2				140
BINIT	H	B12T2		1-05 *		T08		1				140
BINIT	H	C11U1		1-06 *		T08S						140
BINIT				1						24-6/8		140
BINIT	L	A11A1		1-01 *		T10-3		2				141
BINIT	L	A11K2		1-02 *		T10/T12-2		1				141
BINIT	L	C11K1		1-03 *		T08S		2				141
BINIT	L	C11V1		1-04 *		T08		1				141
BINIT	L	D08U2		1-05 *		T03		2				141
BINIT	L	D17R2		1-06 *		T09		1				141
BINIT	L	D17K1		1-07 *		T09		2				141
BINIT	L	C20F1		1-08 *		T02						141
BINIT				1						37-0/8		141
BLKM(0)	H	B11F1		1-01 *		T03S		1				142
BLKM(0)	H	D15S2		1-02 *		T03						142
BLKM(0)				1						9-6/8		142
BLKM(1)	H	A09L1		1-01 *		T17		1				143
BLKM(1)	H	B11E1		1-02 *		T03S						143
BLKM(1)				1						4-6/8		143
BSSYN	H	A08E1		1-01 *		T08S		1				144
BSSYN	H	A08E2		1-02 *		T08		2				144
BSSYN	H	B05A1		1-03 *		T08						144
BSSYN				1						7-2/8		144
BSSYN	L	A08F2		1-01 *		T08S		1				145
BSSYN	L	B05C1		1-02 *		T19						145
BSSYN				1						5-0/8		145
BUS A00	L	B01H2		1-01 *		T20S		2				146
BUS A00	L	B02H2		1-02 *		T20S		1				146
BUS A00	L	B04H2		1-03 *		T19						146
BUS A00				1						6-0/8		146

RUN NAME	A/P	PIN NAME	ORDER PIN	BAY - ORDER	Q	DRAW RV PG Y	X	Z	REMARKS	LENGTH	EXCEPTIONS	RUN NUMBER
BUS A01	L	A07J2		1-01 *		T21S		1				147
BUS A01	L	B04H1		1-02 *		T19		2				147
BUS A01	L	B02H1		1-03 *		T20S		1				147
BUS A01	L	B01H1		1-04 *		T20S						147
BUS A01				1						11-6/8		147
BUS A02	L	A07L1		1-01 *		T21S		1				148
BUS A02	L	B04F1		1-02 *		T19		2				148
BUS A02	L	B02J2		1-03 *		T20S		1				148
BUS A02	L	B01J2		1-04 *		T20S						148
BUS A02				1						11-2/8		148
BUS A03	L	A07K1		1-01 *		T21S		2				149
BUS A03	L	A06V1		1-02 *		T19		1				149
BUS A03	L	B02J1		1-03 *		T20S		2				149
BUS A03	L	B01J1		1-04 *		T20S						149
BUS A03				1						11-4/8		149
BUS A04	L	A07V1		1-01 *		T21S		1				150
BUS A04	L	B04U2		1-02 *		T19		2				150
BUS A04	L	B02K2		1-03 *		T20S		1				150
BUS A04	L	B01K2		1-04 *		T20S						150
BUS A04				1						12-0/8		150
BUS A05	L	A07S1		1-01 *		T21S		1				151
BUS A05	L	B04V1		1-02 *		T19		2				151
BUS A05	L	B02K1		1-03 *		T20S		1				151
BUS A05	L	B01K1		1-04 *		T20S						151
BUS A05				1						12-6/8		151
BUS A06	L	A07R2		1-01 *		T21S		1				152
BUS A06	L	B04U1		1-02 *		T19		2				152
BUS A06	L	B02L2		1-03 *		T20S		1				152
BUS A06	L	B01L2		1-04 *		T20S						152
BUS A06				1						12-4/8		152
BUS A07	L	A07P2		1-01 *		T21S		1				153
BUS A07	L	B04P2		1-02 *		T19		2				153
BUS A07	L	B02L1		1-03 *		T20S		1				153
BUS A07	L	B01L1		1-04 *		T20S						153
BUS A07				1						12-2/8		153
BUS A08	L	B01M2		1-01 *		T20S		2				154
BUS A08	L	B02M2		1-02 *		T20S		1				154
BUS A08	L	B04N2		1-03 *		T19		2				154
BUS A08	L	B07K1		1-04 *		T21S						154
BUS A08				1						10-0/8		154

RUN NAME	A/P	PIN NAME	ORDER PIN	BAY - ORDER	Q	DRAW RV PG Y	X	Z	REMARKS	LENGTH	EXCEPTIONS	RUN NUMBER
BUS A09	L	B01M1		1-01 *		T20S		2				155
BUS A09	L	B02M1		1-02 *		T20S		1				155
BUS A09	L	B04R1		1-03 *		T19		2				155
BUS A09	L	B07E1		1-04 *		T21S						155
BUS A09				1						10-6/8		155
BUS A10	L	B01N2		1-01 *		T20S		1				156
BUS A10	L	B02N2		1-02 *		T20S		2				156
BUS A10	L	B04P1		1-03 *		T19		1				156
BUS A10	L	B07D1		1-04 *		T21S						156
BUS A10				1						10-2/8		156
BUS A11	L	B01N1		1-01 *		T20S		1				157
BUS A11	L	B02N1		1-02 *		T20S		2				157
BUS A11	L	B04L1		1-03 *		T19		1				157
BUS A11	L	B07B1		1-04 *		T21S						157
BUS A11				1						10-4/8		157
BUS A12	L	B04C1		1-01 *		T19		1				158
BUS A12	L	B01P2		1-02 *		T20S		2				158
BUS A12	L	B02P2		1-03 *		T20S		1				158
BUS A12	L	B07P1		1-04 *		T21S						158
BUS A12				1						11-4/8		158
BUS A13	L	B01P1		1-01 *		T20S		2				159
BUS A13	L	B02P1		1-02 *		T20S		1				159
BUS A13	L	B04K2		1-03 *		T19		2				159
BUS A13	L	B07L1		1-04 *		T21S						159
BUS A13				1						10-2/8		159
BUS A14	L	B01R2		1-01 *		T20S		1				160
BUS A14	L	B02R2		1-02 *		T20S		2				160
BUS A14	L	B04K1		1-03 *		T19		1				160
BUS A14	L	B07K2		1-04 *		T21S						160
BUS A14				1						10-0/8		160
BUS A15	L	B01R1		1-01 *		T20S		2				161
BUS A15	L	B02R1		1-02 *		T20S		1				161
BUS A15	L	B04D2		1-03 *		T19		2				161
BUS A15	L	B07J2		1-04 *		T21S						161
BUS A15				1						11-0/8		161
BUS A16	L	B01S2		1-01 *		T20S		1				162
BUS A16	L	B02S2		1-02 *		T20S		2				162
BUS A16	L	B04E2		1-03 *		T19		1				162
BUS A16	L	B08T2		1-04 *		T11S						162
BUS A16				1						11-6/8		162

RUN NAME	A/P	PIN NAME	ORDER PIN	BAY - ORDER	Q	DRAW RV PG Y	X	Z	REMARKS	LENGTH	EXCEPTIONS	RUN NUMBER
BUS A17	L	B01S1		1-01 *		T20S		1				163
BUS A17	L	B02S1		1-02 *		T20S		2				163
BUS A17	L	B04D1		1-03 *		T19		1				163
BUS A17	L	B08N2		1-04 *		T11S						163
BUS A17				1						12-0/8		163
BUS AC LO	L	B01F1		1-01 *		T20S		1				164
BUS AC LO	L	B02F1		1-02 *		T20S						164
BUS AC LO				1						2-6/8		164
BUS BBSY	L	A01P2		1-01 *		T20S		2				165
BUS BBSY	L	A02P2		1-02 *		T20S		1				165
BUS BBSY	L	B05D1		1-03 *		T19S						165
BUS BBSY				1						7-2/8		165
BUS BG4 IN	H	B01E2		1-01 *		T20S		1				166
BUS BG4 IN	H	C05S2		1-02 *		T20S						166
BUS BG4 IN				1						7-0/8		166
BUS BG4 OUT	H	B02E2		1-01 *		T20S		1				167
BUS BG4 OUT	H	C05T2		1-02 *		T20S						167
BUS BG4 OUT				1						7-0/8		167
BUS BG5 IN	H	B01B1		1-01 *		T20S		1				168
BUS BG5 IN	H	C05P2		1-02 *		T20S						168
BUS BG5 IN				1						7-2/8		168
BUS BG5 OUT	H	B02B1		1-01 *		T20S		1				169
BUS BG5 OUT	H	C05R2		1-02 *		T20S						169
BUS BG5 OUT				1						7-0/8		169
BUS BG6 IN	H	B01A1		1-01 *		T20S		1				170
BUS BG6 IN	H	C05M2		1-02 *		T20S						170
BUS BG6 IN				1						7-0/8		170
BUS BG6 OUT	H	B02A1		1-01 *		T20S		1				171
BUS BG6 OUT	H	C05N2		1-02 *		T20						171
BUS BG6 OUT				1						7-0/8		171
BUS BG7 IN	H	A01V1		1-01 *		T20S		1				172
BUS BG7 IN	H	C05K2		1-02 *		T20S						172
BUS BG7 IN				1						7-4/8		172
BUS BG7 OUT	H	A02V1		1-01 *		T20S		1				173
BUS BG7 OUT	H	C05L2		1-02 *		T20S						173
BUS BG7 OUT				1						7-2/8		173

TC11,F RUN NAME	A/P PIN NAME	ORDER PIN ORDER	BAY- Q	DRAW	RV	REMARKS	LENGTH	EXCEPTIONS	RUN NUMBER
BUS BR4	B01D2	1-01 *	T20S		2				174
BUS BR4	B02D2	1-02 *	T20S		1				174
BUS BR4	C05H2	1-03 *	T20						174
BUS BR4		1					8-4/8		174
BUS BR5	B01C1	1-01 *	T20S		2				175
BUS BR5	B02C1	1-02 *	T20S		1				175
BUS BR5	C05F2	1-03 *	T20						175
BUS BR5		1					8-6/8		175
BUS BR6	A01U2	1-01 *	T20S		2				176
BUS BR6	A02U2	1-02 *	T20S		1				176
BUS BR6	C05E2	1-03 *	T20S						176
BUS BR6		1					9-4/8		176
BUS BR7	A01T2	1-01 *	T20S		2				177
BUS BR7	A02T2	1-02 *	T20S		1				177
BUS BR7	C05D2	1-03 *	T20						177
BUS BR7		1					9-4/8		177
BUS C0	B01U2	1-01 *	T20S		2				178
BUS C0	B02U2	1-02 *	T20S		1				178
BUS C0	B04J2	1-03 *	T19						178
BUS C0		1					6-6/8		178
BUS C1	B01T2	1-01 *	T20S		2				179
BUS C1	B02T2	1-02 *	T20S		1				179
BUS C1	B04F2	1-03 *	T19						179
BUS C1	B06D1	1-04 *	T08S						179
BUS C1		1					10-0/8		179
BUS D00	A01C1	1-01 *	T20S		2				180
BUS D00	A02C1	1-02 *	T20S		1				180
BUS D00	A04A1	1-03 *	T13S						180
BUS D00	A05A1	1-04 *	T13						180
BUS D00		1					9-0/8		180
BUS D01	A01D2	1-01 *	T20S		2				181
BUS D01	A02D2	1-02 *	T20S		1				181
BUS D01	A04C1	1-03 *	T13S						181
BUS D01	A05C1	1-04 *	T13						181
BUS D01		1					8-4/8		181

TC11,F RUN NAME	A/P PIN NAME	ORDER PIN ORDER	BAY- Q	DRAW	RV	REMARKS	LENGTH	EXCEPTIONS	RUN NUMBER
BUS D02	A01D1	1-01 *	T20S		2				182
BUS D02	A02D1	1-02 *	T20S		1				182
BUS D02	A04D1	1-03 *	T13S						182
BUS D02	A05D1	1-04 *	T13						182
BUS D02	B05E2	1-05 *	T19S						182
BUS D02		1					14-0/8		182
BUS D03	A01E2	1-01 *	T20S		2				183
BUS D03	A02E2	1-02 *	T20S		1				183
BUS D03	A04E2	1-03 *	T13S						183
BUS D03	A05E2	1-04 *	T13						183
BUS D03	B05L1	1-05 *	T19S						183
BUS D03		1					14-4/8		183
BUS D04	A01E1	1-01 *	T20S		2				184
BUS D04	A02E1	1-02 *	T20S		1				184
BUS D04	A04F1	1-03 *	T13S						184
BUS D04	A05F1	1-04 *	T13						184
BUS D04	B05N2	1-05 *	T19S						184
BUS D04		1					15-0/8		184
BUS D05	A01F2	1-01 *	T20S		2				185
BUS D05	A02F2	1-02 *	T20S		1				185
BUS D05	A04H2	1-03 *	T13S						185
BUS D05	A05H2	1-04 *	T13						185
BUS D05	B05F1	1-05 *	T19S						185
BUS D05		1					13-6/8		185
BUS D06	A01F1	1-01 *	T20S		2				186
BUS D06	A02F1	1-02 *	T20S		1				186
BUS D06	A04J1	1-03 *	T13S						186
BUS D06	A05J1	1-04 *	T13						186
BUS D06	B05F2	1-05 *	T19S						186
BUS D06		1					14-0/8		186
BUS D07	A01H2	1-01 *	T20S		2				187
BUS D07	A02H2	1-02 *	T20S		1				187
BUS D07	A04K2	1-03 *	T13S						187
BUS D07	A05K2	1-04 *	T13						187
BUS D07	B05H1	1-05 *	T19S						187
BUS D07		1					14-0/8		187

RUN NAME	A/P	PIN NAME	ORDER PIN	BAY - ORDER	Q	DRAW RV PG Y	X	Z	REMARKS	LENGTH	EXCEPTIONS	RUN NUMBER
BUS D08	L	A01H1		1-01 *		T20S		2				188
BUS D08	L	A02H1		1-02 *		T20S		1				188
BUS D08	L	A04L1		1-03 *		T13S		2				188
BUS D08	L	A05L1		1-04 *		T13		1				188
BUS D08	L	B05K1		1-05 *		T19S						188
BUS D08				1						14-2/8		188
BUS D09	L	A01J2		1-01 *		T20S		2				189
BUS D09	L	A02J2		1-02 *		T20S		1				189
BUS D09	L	A04M2		1-03 *		T13S		2				189
BUS D09	L	A05M2		1-04 *		T13						189
BUS D09				1						9-0/8		189
BUS D10	L	A01J1		1-01 *		T20S		2				190
BUS D10	L	A02J1		1-02 *		T20S		1				190
BUS D10	L	A04N1		1-03 *		T13S		2				190
BUS D10	L	A05N1		1-04 *		T13						190
BUS D10				1						9-0/8		190
BUS D11	L	A01K2		1-01 *		T20S		2				191
BUS D11	L	A02K2		1-02 *		T20S		1				191
BUS D11	L	A04P2		1-03 *		T13S		2				191
BUS D11	L	A05P2		1-04 *		T13						191
BUS D11				1						9-0/8		191
BUS D12	L	A01K1		1-01 *		T20S		2				192
BUS D12	L	A02K1		1-02 *		T20S		1				192
BUS D12	L	A04R1		1-03 *		T13S		2				192
BUS D12	L	A05R1		1-04 *		T13						192
BUS D12				1						9-2/8		192
BUS D13	L	A01L2		1-01 *		T20S		2				193
BUS D13	L	A02L2		1-02 *		T20S		1				193
BUS D13	L	A04S2		1-03 *		T13S		2				193
BUS D13	L	A05S2		1-04 *		T13						193
BUS D13				1						9-0/8		193
BUS D14	L	A01L1		1-01 *		T20S		2				194
BUS D14	L	A02L1		1-02 *		T20S		1				194
BUS D14	L	A04V1		1-03 *		T13S		2				194
BUS D14	L	A05V1		1-04 *		T13						194
BUS D14				1						9-2/8		194

RUN NAME	A/P	PIN NAME	ORDER PIN	BAY - ORDER	Q	DRAW RV PG Y	X	Z	REMARKS	LENGTH	EXCEPTIONS	RUN NUMBER
BUS D15	L	A01M2		1-01 *		T20S		2				195
BUS D15	L	A02M2		1-02 *		T20S		1				195
BUS D15	L	A04U2		1-03 *		T13S		2				195
BUS D15	L	A05U2		1-04 *		T13						195
BUS D15				1						9-2/8		195
BUS DC LO	L	A06H2		1-01 *		T08		1				196
BUS DC LO	L	B02F2		1-02 *		T20S		2				196
BUS DC LO	L	B01F2		1-03 *		T20S						196
BUS DC LO				1						8-4/8		196
BUS INIT	L	A01A1		1-01 *		T20S		2				197
BUS INIT	L	A02A1		1-02 *		T20S		1				197
BUS INIT	L	A06C1		1-03 *		T08						197
BUS INIT				1						7-2/8		197
BUS INTR	L	A01B1		1-01 *		T20S		2				198
BUS INTR	L	A02B1		1-02 *		T20S		1				198
BUS INTR	L	B05M1		1-03 *		T19S						198
BUS INTR				1						9-4/8		198
BUS MSYN	L	B02V1		1-01 *		T20S		2				199
BUS MSYN	L	B01V1		1-02 *		T20S		1				199
BUS MSYN	L	B04E1		1-03 *		T19		2				199
BUS MSYN	L	B06E1		1-04 *		T08S						199
BUS MSYN				1						10-4/8		199
BUS NPG IN	H	A01U1	B05B1	1-01 *		T20S		1				200
BUS NPG IN	H	B05B1		1-02 *								200
BUS NPG IN				1						4-6/8		200
BUS NPG OUT	H	A02U1	B05V2	1-01 *		T20		1				201
BUS NPG OUT	H	B05V2		1-02 *								201
BUS NPG OUT				1						6-0/8		201
BUS NPR	L	A01S2		1-01 *		T20S		2				202
BUS NPR	L	A02S2	B05J1	1-02 *		T20S		1				202
BUS NPR	L	B05J1	B05U2	1-03 *				2				202
BUS NPR	L	B05U2		1-04 *								202
BUS NPR				1						11-0/8		202
BUS PA	L	A01M1		1-01 *		T20S		1				203
BUS PA	L	A02M1		1-02 *		T20S						203
BUS PA				1						2-6/8		203

RUN NAME	A/P	PIN NAME	ORDER PIN	BAY - ORDER	Q	DRAW RV PG Y	X	Z	REMARKS	LENGTH	EXCEPTIONS	RUN NUMBER
BUS PB	L	A01N2		1-01 *		T20S		1				204
BUS PB	L	A02N2		1-02 *		T20S						204
BUS PB				1						2-6/8		204
BUS REQUEST	L	B05P1		1-01 *				1				205
BUS REQUEST	L	C05J2		1-02 *		T20						205
BUS REQUEST				1						4-4/8		205
BUS SACK	L	A01R2		1-01 *		T20S		2				206
BUS SACK	L	A02R2		1-02 *		T20S		1				206
BUS SACK	L	B05T2		1-03 *		T19S						206
BUS SACK				1						8-6/8		206
BUS SSYN	L	A06D1		1-01 *		T08		2				207
BUS SSYN	L	B08K1		1-02 *		T08S		1				207
BUS SSYN	L	B02U1		1-03 *		T20S		2				207
BUS SSYN	L	B01U1		1-04 *		T20S						207
BUS SSYN				1						14-4/8		207
BUS TO DAT	H	B17C1		1-01 *		T14		1				208
BUS TO DAT	H	B15C1		1-02 *		T15		2				208
BUS TO DAT	H	A15M2		1-03 *		T16		1				208
BUS TO DAT	H	A17C1		1-04 *		T16		2				208
BUS TO DAT	H	A13D2		1-05 *		T14		1				208
BUS TO DAT	H	A13A1		1-06 *		T14		2				208
BUS TO DAT	H	A13D1		1-07 *		T14		1				208
BUS TO DAT	H	A13H2		1-08 *		T15		2				208
BUS TO DAT	H	A13H1		1-09 *		T14		1				208
BUS TO DAT	H	A13L1		1-10 *		T15		2				208
BUS TO DAT	H	A13L2		1-11 *		T15		1				208
BUS TO DAT	H	A13P1		1-12 *		T15		2				208
BUS TO DAT	H	A13P2		1-13 *		T16		1				208
BUS TO DAT	H	A13T2		1-14 *		T16		2				208
BUS TO DAT	H	B13A1		1-15 *		T16		1				208
BUS TO DAT	H	B13D1		1-16 *		T16		2				208
BUS TO DAT	H	C10S1		1-17 *		T09S						208
BUS TO DAT				1						33-0/8		208
BUS TO MAINT	H	A11B1		1-01 *		T10		1				209
BUS TO MAINT	H	B12K1		1-02 *		T09S		2				209
BUS TO MAINT	H	B13M2		1-03 *		T10		1				209
BUS TO MAINT	H	B13J2		1-04 *		T10						209
BUS TO MAINT				1						12-2/8		209

RUN NAME	A/P	PIN NAME	ORDER PIN	BAY - ORDER	Q	DRAW RV PG Y	X	Z	REMARKS	LENGTH	EXCEPTIONS	RUN NUMBER
BUS TO RWB	H	B12N1		1-01 *		T09S		2				210
BUS TO RWB	H	C17E1		1-02 *		T06		1				210
BUS TO RWB	H	C17J1		1-03 *		T06		2				210
BUS TO RWB	H	C17E2		1-04 *		T06						210
BUS TO RWB				1						11-0/8		210
BUS TO TCBA	L	B07R1		1-01 *		T21		2				211
BUS TO TCBA	L	B07V2		1-02 *		T21		1				211
BUS TO TCBA	L	C08M2		1-03 *		T09S						211
BUS TO TCBA				1						7-2/8		211
BUS TO TCCM	H	A12K2		1-01 *		T11		2				212
BUS TO TCCM	H	A12S1		1-02 *		T11		1				212
BUS TO TCCM	H	C11E1		1-03 *		T09S						212
BUS TO TCCM				1						9-6/8		212
BUS TO TCCM+1	H	A12F2		1-01 *		T11		2				213
BUS TO TCCM+1	H	A11L2		1-02 *		T11		1				213
BUS TO TCCM+1	H	A11N1		1-03 *		T11		2				213
BUS TO TCCM+1	H	C11F2		1-04 *		T09S		1				213
BUS TO TCCM+1	H	D06T2		1-05 *		T03						213
BUS TO TCCM+1				1						20-2/8		213
BUS TO TCWC	L	A07E2		1-01 *		T22		1				214
BUS TO TCWC	L	B07S1		1-02 *		T22		2				214
BUS TO TCWC	L	C08M2		1-03 *		T09S						214
BUS TO TCWC				1						10-6/8		214
BUS TO XDAT	H	A15C1		1-01 *		T14		2				215
BUS TO XDAT	H	A15P1		1-02 *		T15		1				215
BUS TO XDAT	H	B12K2		1-03 *		T09S						215
BUS TO XDAT				1						8-6/8		215
C0(0)	H	C13B1		1-01 *		T06		1				216
C0(0)	H	C13H1		1-02 *		T06		2				216
C0(0)	H	C13N1		1-03 *		T06		1				216
C0(0)	H	D15M2		1-04 *		T03		2				216
C0(0)	H	D19V2		1-05 *		T02S		1				216
C0(0)	H	D23K2		1-06 *		T04		2				216
C0(0)	H	D22A1		1-07 *		T05						216
C0(0)				1						25-2/8		216

A/P	PIN NAME	ORDER PIN	BAY - ORDER	Q	DRAW RV PG Y	X	Z	REMARKS	LENGTH	EXCEPTIONS	RUN NUMBER
H	C22C1		1-01 *		T02		1				217
H	C22E2		1-02 *		T02		2				217
H	C21K2		1-03 *		T05		1				217
H	C22K1		1-04 *		T02		2				217
H	C22M2		1-05 *		T02		1				217
H	C22R1		1-06 *		T02		2				217
H	C22T2		1-07 *		T02		1				217
H	D19U2		1-08 *		T02S						217
			1						22-4/8		217
	C04A1		1-01 *		T08		1				218
	C04C1		1-02 *		T08						218
			1						2-4/8		218
	C04D2		1-01 *				1				219
	C04D1		1-02 *								219
			1						2-4/8		219
	C04K1		1-01 *		T08S		2				220
	C04S1		1-02 *		T08		1				220
	C04U1		1-03 *		T08						220
			1						5-4/8		220
	C04P1		1-01 *				1				221
	C04V1		1-02 *								221
			1						3-0/8		221
	C06L2		1-01 *		T02S		1				222
	D19A1		1-02 *		T02						222
			1						9-2/8		222
	C06M1		1-01 *		T02S		1				223
	D19D1		1-02 *		T02						223
			1						9-6/8		223
	C07U2		1-01 *		T09		2				224
	C06U1		1-02 *		T09S		1				224
	C09E1		1-03 *		T09						224
			1						7-4/8		224
	C06C1		1-01 *		T09		1				225
	C07F2		1-02 *		T09S						225
			1						3-4/8		225
	B12M1		1-01 *		T09		1				226
	C07K1		1-02 *		T09S						226
			1						5-6/8		226

A/P	PIN NAME	ORDER PIN	BAY - ORDER	Q	DRAW RV PG Y	X	Z	REMARKS	LENGTH	EXCEPTIONS	RUN NUMBER
	C06N1		1-01 *		T08		1				227
	C07K2		1-02 *		T08S						227
			1						3-2/8		227
	B12L2		1-01 *		T19		1				228
	C07N1		1-02 *		T19S						228
			1						6-2/8		228
	C07N2		1-01 *		T02S		1				229
	D19F2		1-02 *		T02						229
			1						9-2/8		229
	C07E2		1-01 *		T09		1				230
	C07S2		1-02 *		T09S						230
			1						3-4/8		230
	C07V2		1-01 *		T09S		1				231
	D17U2		1-02 *		T09						231
			1						8-2/8		231
	C08D1		1-01 *		T09S		1				232
	C11E2		1-02 *		T09						232
			1						4-0/8		232
	C08J1		1-01 *		T09S		1				233
	C11D1		1-02 *		T09						233
			1						4-0/8		233
	B12H2		1-01 *		T09		2				234
	B12J1		1-02 *		T09		1				234
	B12L1		1-03 *		T09		2				234
	C08N1		1-04 *		T09S						234
			1						11-0/8		234
	C06V1		1-01 *		T09		1				235
	C08S2		1-02 *		T09S						235
			1						3-6/8		235
	C08U1		1-01 *		T08S		1				236
	C10N2		1-02 *		T08						236
			1						4-0/8		236
	C10N1		1-01 *		T09		1				237
	C10M1		1-02 *		T09		2				237
	C08V1		1-03 *		T09S						237
			1						6-0/8		237

A/P	PIN NAME	ORDER PIN	BAY - ORDER	Q	DRAW RV PG Y	X	Z	REMARKS	LENGTH	EXCEPTIONS	RUN NUMBER
	C09D1		1-01 *		T09S		1				238
	D17H1		1-02 *		T09						238
			1						7-4/8		238
	C09H2		1-01 *		T02S		1				239
	C20N1		1-02 *		T02						239
			1						8-0/8		239
	C09M2		1-01 *		T02S		1				240
	C20P1		1-02 *		T02						240
			1						7-6/8		240
	C07L2		1-01 *		T02		1				241
	C09N1		1-02 *		T02S						241
			1						3-2/8		241
	C09K2		1-01 *		T02		1				242
	C09S2		1-02 *		T02S						242
			1						4-2/8		242
	C09U1		1-01 *		T02S		1				243
	C20H1		1-02 *		T02						243
			1						8-4/8		243
	C09R2		1-01 *		T02		1				244
	C09V1		1-02 *		T02S						244
			1						3-0/8		244
H	C22P1		1-01 *		T02S		2				245
H	D14C1		1-02 *		T07		1				245
H	D13D2		1-03 *		T04						245
			1						9-4/8		245
H	C20F2		1-01 *		T02		2				246
H	C21L2		1-02 *		T05		1				246
H	C22J1		1-03 *		T02		2				246
H	C22D1		1-04 *		T02		1				246
H	C22F2		1-05 *		T02		2				246
H	C22N2		1-06 *		T02		1				246
H	C22U2		1-07 *		T02S		2				246
H	D22B1		1-08 *		T05		1				246
H	D17H2		1-09 *		T07		2				246
H	D19D2		1-10 *		T05		1				246
H	D13J1		1-11 *		T04		2				246
H	C04J2		1-12 *		T08						246
			1						40-4/8		246

A/P	PIN NAME	ORDER PIN	BAY - ORDER	Q	DRAW RV PG Y	X	Z	REMARKS	LENGTH	EXCEPTIONS	RUN NUMBER
	C11B1		1-01 *		T07S		1				247
	C18V2		1-02 *		T07		2				247
	D18H2		1-03 *		T07						247
			1						10-6/8		247
	C11S1		1-01 *		T05S		1				248
	D23N1		1-02 *		T05						248
			1						9-4/8		248
	C13J2		1-01 *		T06S		1				249
	C14C1		1-02 *		T06						249
			1						3-0/8		249
	C13P2		1-01 *		T06S		1				250
	C14E2		1-02 *		T06						250
			1						3-4/8		250
	C13V2		1-01 *		T06S		1				251
	C14J1		1-02 *		T06						251
			1						3-6/8		251
	C14M2		1-01 *		T06		1				252
	C16E1		1-02 *		T06S						252
			1						3-4/8		252
	C11L1		1-01 *		T05		1				253
	C16J2		1-02 *		T05S						253
			1						5-2/8		253
	C14P1		1-01 *		T06		1				254
	C16L1		1-02 *		T06S						254
			1						3-6/8		254
	C11K2		1-01 *		T05		1				255
	C16P2		1-02 *		T05S						255
			1						5-0/8		255
	C14T2		1-01 *		T06		1				256
	C16S1		1-02 *		T06S						256
			1						3-0/8		256
	C16V2		1-01 *		T07S		1				257
	C18S2		1-02 *		T07						257
			1						3-4/8		257

RUN NAME	A/P	PIN NAME	ORDER PIN	BAY - ORDER	Q	DRAW RV PG Y	X	Z	REMARKS	LENGTH	EXCEPTIONS	RUN NUMBER
C17C1		C17C1		1-01 *		T02S		1				258
C17C1		D07F1		1-02 *		T02						258
C17C1				1						8-4/8		258
C17F1		C14N2		1-01 *		T06		1				259
C17F1		C17F1		1-02 *		T06S						259
C17F1				1						4-0/8		259
C17F2		C14R1		1-01 *		T06		1				260
C17F2		C17F2		1-02 *		T06S						260
C17F2				1						4-4/8		260
C17K1		C14U2		1-01 *		T06		1				261
C17K1		C17K1		1-02 *		T06S						261
C17K1				1						4-0/8		261
C17K2		C17K2		1-01 *		T04S		1				262
C17K2		D19L1		1-02 *		T04						262
C17K2				1						5-4/8		262
C17N1		C17N1		1-01 *		T07S		1				263
C17N1		D18H1		1-02 *		T07						263
C17N1				1						4-6/8		263
C17N2		C17M1		1-01 *		T07		1				264
C17N2		C17N2		1-02 *		T07S						264
C17N2				1						2-6/8		264
C17S2		C17S2		1-01 *		T05S		1				265
C17S2		C20K2		1-02 *		T05						265
C17S2				1						4-2/8		265
C17V2		C17V2		1-01 *		T07S		1				266
C17V2		D14H1		1-02 *		T07						266
C17V2				1						4-6/8		266
C19D1		C19D1		1-01 *		T05S		1				267
C19D1		C19L1		1-02 *		T05						267
C19D1				1						3-0/8		267
C19H2		C17R2		1-01 *		T05		1				268
C19H2		C19H2		1-02 *		T05S						268
C19H2				1						3-4/8		268
C19J1		C19J1		1-01 *		T05S		1				269
C19J1		C19M1		1-02 *		T05						269
C19J1				1						2-6/8		269

RUN NAME	A/P	PIN NAME	ORDER PIN	BAY - ORDER	Q	DRAW RV PG Y	X	Z	REMARKS	LENGTH	EXCEPTIONS	RUN NUMBER
C19M2		C19M2		1-01 *		T07S		1				270
C19M2		C11A1		1-02 *		T07						270
C19M2				1						7-2/8		270
C19N1		C19N1		1-01 *		T05S		1				271
C19N1		D20D1		1-02 *		T05						271
C19N1				1						4-2/8		271
C19U1		C17P2		1-01 *		T05		1				272
C19U1		C19U1		1-02 *		T05S						272
C19U1				1						3-2/8		272
C2(0)	H	C22B1		1-01 *		T02		2				273
C2(0)	H	C22H1		1-02 *		T02S		1				273
C2(0)	H	D17F2		1-03 *		T07		2				273
C2(0)	H	D16V1		1-04 *		T02		1				273
C2(0)	H	D13L2		1-05 *		T03						273
C2(0)				1						17-2/8		273
C2(1)	H	C23J1		1-01 *		T02		1				274
C2(1)	H	C22H2		1-02 *		T02		2				274
C2(1)	H	C22P2		1-03 *		T02S		1				274
C2(1)	H	D21E2		1-04 *		T02		2				274
C2(1)	H	C20U2		1-05 *		T05		1				274
C2(1)	H	C17U2		1-06 *		T07		2				274
C2(1)	H	C19F2		1-07 *		T05		1				274
C2(1)	H	C19B1		1-08 *		T05		2				274
C2(1)	H	C10C1		1-09 *		T07						274
C2(1)				1						31-6/8		274
C20J2		C20J2		1-01 *		T02S		1				275
C20J2		D19N2		1-02 *		T02						275
C20J2				1						5-6/8		275
C20L1		C06L1		1-01 *		T02		1				276
C20L1		C20L1		1-02 *		T02S						276
C20L1				1						9-2/8		276
C20P2		C11R1		1-01 *		T05		1				277
C20P2		C20P2		1-02 *		T05S						277
C20P2				1						7-0/8		277
C20S1		C20S1		1-01 *		T02S		1				278
C20S1		D19C1		1-02 *		T02						278
C20S1				1						3-6/8		278

C20V2		C19K1		1-01 *		T05			1			279
C20V2		C20V2		1-02 *		T05S						279
C20V2				1							3-6/8	279
C21D1		C10K2		1-01 *		T08			1			280
C21D1		C10L2		1-02 *		T08			2			280
C21D1		C21D1		1-03 *		T08S						280
C21D1				1							10-4/8	280
C21J1		C10M2		1-01 *		T08			1			281
C21J1		C21J1		1-02 *		T08S						281
C21J1				1							8-0/8	281
C21N1		C20R1		1-01 *		T02			1			282
C21N1		C21N1		1-02 *		T02S						282
C21N1				1							3-0/8	282
C21V1		A14F2		1-01 *		T03			1			283
C21V1		C21V1		1-02 *		T03S						283
C21V1				1							10-4/8	283
C23E1		C17J2		1-01 *		T04			1			284
C23E1		C23E1		1-02 *		T04S						284
C23E1				1							5-2/8	284
C23J2		C23J2		1-01 *		T02S			1			285
C23J2		D22H2		1-02 *		T02						285
C23J2				1							5-2/8	285
C23L1		C07M2		1-01 *		T02			1			286
C23L1		C23L1		1-02 *		T02S						286
C23L1				1							10-2/8	286
C23S1		C23E2		1-01 *		T02			1			287
C23S1		C23S1		1-02 *		T02S						287
C23S1				1							3-6/8	287
C2B	H	C20E2		1-01 *		T02			2			288
C2B	H	C21M1		1-02 *		T02			1			288
C2B	H	D18R2		1-03 *		T07			2			288
C2B	H	D19U1		1-04 *		T02S						288
C2B				1							13-2/8	288
C3(0)	H	C22A1		1-01 *		T02S			1			289
C3(0)	H	C22L2		1-02 *		T02						289
C3(0)				1							3-6/8	289

C3(1)	H	C22J2		1-01 *		T02S			2			290
C3(1)	H	C19F1		1-02 *		T05			1			290
C3(1)	H	C19S1		1-03 *		T05			2			290
C3(1)	H	D17E2		1-04 *		T07			1			290
C3(1)	H	D15E2		1-05 *		T05			2			290
C3(1)	H	D13P1		1-06 *		T03			1			290
C3(1)	H	C09L2		1-07 *		T02						290
C3(1)				1							25-4/8	290
CLEAR BUS	H	B06P2		1-01 *		T08S			2			291
CLEAR BUS	H	C07H2		1-02 *		T08			1			291
CLEAR BUS	H	C21A1		1-03 *		T08						291
CLEAR BUS				1							13-6/8	291
CLEAR BUS	L	B06N2		1-01 *		T08S			1			292
CLEAR BUS	L	B11J1		1-02 *		T08						292
CLEAR BUS				1							4-6/8	292
CLEAR DAT	L	A14D1		1-01 *		T16			2			293
CLEAR DAT	L	A16D1		1-02 *		T16			1			293
CLEAR DAT	L	A16H2		1-03 *		T16			2			293
CLEAR DAT	L	A16L1		1-04 *		T16			1			293
CLEAR DAT	L	A16P2		1-05 *		T16			2			293
CLEAR DAT	L	A16T2		1-06 *		T16			1			293
CLEAR DAT	L	B16D1		1-07 *		T14			2			293
CLEAR DAT	L	B16H2		1-08 *		T14			1			293
CLEAR DAT	L	B16L1		1-09 *		T14			2			293
CLEAR DAT	L	B16P2		1-10 *		T14			1			293
CLEAR DAT	L	B16T2		1-11 *		T14			2			293
CLEAR DAT	L	B14T2		1-12 *		T15			1			293
CLEAR DAT	L	B14P2		1-13 *		T15			2			293
CLEAR DAT	L	B14H2		1-14 *		T15			1			293
CLEAR DAT	L	B14D1		1-15 *		T15			2			293
CLEAR DAT	L	B14L1		1-16 *		T15			1			293
CLEAR DAT	L	C11H1		1-17 *		T09S						293
CLEAR DAT				1							49-0/8	293
CLEAR RWB2-0	L	C09J1		1-01 *		T09S			1			294
CLEAR RWB2-0	L	C14K2		1-02 *		T06						294
CLEAR RWB2-0				1							5-0/8	294
CLEAR XDAT	L	A14P2		1-01 *		T14			1			295
CLEAR XDAT	L	A14T2		1-02 *		T15			2			295
CLEAR XDAT	L	C08B1		1-03 *		T09S						295
CLEAR XDAT				1							10-6/8	295

RUN NAME	A/P	PIN NAME	ORDER PIN	BAY - ORDER	Q	DRAW RV PG Y	X	Z	REMARKS	LENGTH	EXCEPTIONS	RUN NUMBER
CLK(0)	H	A14N1		1-01 *		T10S		1				296
CLK(0)	H	A14K1		1-02 *		T10		2				296
CLK(0)	H	A11T2		1-03 *		T10		1				296
CLK(0)	H	D00A1		1-04 *								296
CLK(0)				1						15-6/8		296
CLK(1)	H	A14M1		1-01 *		T10S		1				297
CLK(1)	H	B09D1		1-02 *		T18						297
CLK(1)				1						5-4/8		297
CLOCK DAT	H	B16R1		1-01 *		T14		2				298
CLOCK DAT	H	B16M2		1-02 *		T14		1				298
CLOCK DAT	H	B16J1		1-03 *		T14		2				298
CLOCK DAT	H	B16E2		1-04 *		T14		1				298
CLOCK DAT	H	B16B1		1-05 *		T14		2				298
CLOCK DAT	H	A16R1		1-06 *		T16		1				298
CLOCK DAT	H	A16M2		1-07 *		T16		2				298
CLOCK DAT	H	A16J1		1-08 *		T16		1				298
CLOCK DAT	H	A16E2		1-09 *		T16		2				298
CLOCK DAT	H	A16B1		1-10 *		T16		1				298
CLOCK DAT	H	A14B1		1-11 *		T16		2				298
CLOCK DAT	H	A14M2		1-12 *		T14		1				298
CLOCK DAT	H	A14R1		1-13 *		T15		2				298
CLOCK DAT	H	B14B1		1-14 *		T15		1				298
CLOCK DAT	H	B14E2		1-15 *		T15		2				298
CLOCK DAT	H	B14J1		1-16 *		T15		1				298
CLOCK DAT	H	B14M2		1-17 *		T15		2				298
CLOCK DAT	H	B14R1		1-18 *		T15		1				298
CLOCK DAT	H	C10P2		1-19 *		T08S						298
CLOCK DAT				1						55-0/8		298
CLPB	H	C13B1		1-01 *		T06		2				299
CLPB	H	C13D2		1-02 *		T06		1				299
CLPB	H	C13H1		1-03 *		T06		2				299
CLPB	H	C13N1		1-04 *		T06		1				299
CLPB	H	C13S2		1-05 *		T06		2				299
CLPB	H	C13L2		1-06 *		T06		1				299
CLPB	H	C10L1		1-07 *		T07S						299
CLPB				1						19-4/8		299
CON ALL HALT	H	A19T2		1-01 *		T12S		1				300
CON ALL HALT	H	A20J1		1-02 *		T12						300
CON ALL HALT				1						3-4/8		300
CON FWD REM	H	A19U1		1-01 *		T12S		1				301
CON FWD REM	H	A20H1		1-02 *		T12						301
CON FWD REM				1						3-6/8		301

RUN NAME	A/P	PIN NAME	ORDER PIN	BAY - ORDER	Q	DRAW RV PG Y	X	Z	REMARKS	LENGTH	EXCEPTIONS	RUN NUMBER
CON GO	H	A19S1		1-01 *		T12S		1				302
CON GO	H	A20D1		1-02 *		T12						302
CON GO				1						4-0/8		302
CON POWER UP DLY	L	A19V2		1-01 *		T12S		1				303
CON POWER UP DLY	L	A20L1		1-02 *		T12						303
CON POWER UP DLY				1						3-4/8		303
CON REV REM	H	A19R2		1-01 *		T12S		1				304
CON REV REM	H	A20E1		1-02 *		T12						304
CON REV REM				1						3-4/8		304
CON STOP	H	A19P1		1-01 *		T12S		1				305
CON STOP	H	A20B1		1-02 *		T12						305
CON STOP				1						4-0/8		305
D04A1			A08F2	1-01 *		T04S		1				306
D04A1			B11N2	1-02 *		T04		2				306
D04A1			D04B1	1-03 *		T04S		1				306
D04A1			D04A1	1-04 *		T04S						306
D04A1				1						17-0/8		306
D04K1			D04P2	1-01 *		T04		1				307
D04K1			D04P1	1-02 *		T04		2				307
D04K1			D04K1	1-03 *		T04S						307
D04K1				1						5-2/8		307
D04T2			D04S1	1-01 *		T04		2				308
D04T2			D04S2	1-02 *		T04		1				308
D04T2			D04T2	1-03 *		T04S						308
D04T2				1						5-0/8		308
D05A1			D05A1	1-01 *		T04S		1				309
D05A1			D05C1	1-02 *		T04						309
D05A1				1						2-4/8		309
D05D1			D05D1	1-01 *		T04S		1				310
D05D1			D05D2	1-02 *		T04						310
D05D1				1						2-4/8		310
D05F2			C23A1	1-01 *		T04		1				311
D05F2			D05F2	1-02 *		T04S						311
D05F2				1						12-4/8		311
D05M2			D05M2	1-01 *		T04S		1				312
D05M2			D05R2	1-02 *		T04						312
D05M2				1						2-6/8		312

RUN NAME	A/P	PIN NAME	ORDER PIN	BAY - ORDER	Q	DRAW RV PG Y	X	Z	REMARKS	LENGTH	EXCEPTIONS	RUN NUMBER
D05P1		D05P1		1-01 *		T04S		1				313
D05P1		D05V1		1-02 *		T04						313
D05P1				1						3-0/8		313
D06C1		D06C1		1-01 *		T03S		1				314
D06C1		D14N2		1-02 *		T03						314
D06C1				1						7-2/8		314
D06F1		D06F1		1-01 *		T03S		1				315
D06F1		D14P2		1-02 *		T03						315
D06F1				1						6-6/8		315
D06F2		D06F2		1-01 *		T03S		1				316
D06F2		D14R2		1-02 *		T03						316
D06F2				1						6-6/8		316
D06K2		D06K2		1-01 *		T03S		1				317
D06K2		D06L1		1-02 *		T03						317
D06K2				1						2-4/8		317
D06N1		D16A1		1-01 *		T03		2				318
D06N1		D14P1		1-02 *		T03		1				318
D06N1		D06N1		1-03 *		T03S						318
D06N1				1						10-4/8		318
D06S2		D06S2		1-01 *		T03S		1				319
D06S2		D07D2		1-02 *		T03						319
D06S2				1						4-0/8		319
D06V2		D06V2		1-01 *		T03S		1				320
D06V2		D08T2		1-02 *		T03						320
D06V2				1						3-4/8		320
D07K1		C20D2		1-01 *		T02		1				321
D07K1		D07K1		1-02 *		T02S						321
D07K1				1						10-6/8		321
D08C1		D08C1		1-01 *		T04S		1				322
D08C1		D08D2		1-02 *		T04		2				322
D08C1		D09P2		1-03 *		T04						322
D08C1				1						6-4/8		322
D08F1		D08E2		1-01 *		T04		1				323
D08F1		D08F1		1-02 *		T04S		2				323
D08F1		D09M2		1-03 *		T04		1				323
D08F1		D09N2		1-04 *		T04						323
D08F1				1						8-2/8		323

RUN NAME	A/P	PIN NAME	ORDER PIN	BAY - ORDER	Q	DRAW RV PG Y	X	Z	REMARKS	LENGTH	EXCEPTIONS	RUN NUMBER
D08F2		D09K2		1-01 *		T04		2				324
D08F2		D09J2		1-02 *		T04		1				324
D08F2		D09M2		1-03 *		T04		2				324
D08F2		D08F2		1-04 *		T04S						324
D08F2				1						7-6/8		324
D08N2		D08N2		1-01 *		T04S		1				325
D08N2		D08R1		1-02 *		T04						325
D08N2				1						2-6/8		325
D08S1		D08S1		1-01 *		T04S		1				326
D08S1		D12K2		1-02 *		T04						326
D08S1				1						5-0/8		326
D08V2		D08V2		1-01 *		T03S		1				327
D08V2		D13H2		1-02 *		T03						327
D08V2				1						5-2/8		327
D09F2		D09F2		1-01 *		T04S		1				328
D09F2		D13B1		1-02 *		T04						328
D09F2				1						4-2/8		328
D09L2		D09L2		1-01 *		T04S		1				329
D09L2		D13D1		1-02 *		T04						329
D09L2				1						4-4/8		329
D10T2		B12E1		1-01 *		T10		1				330
D10T2		D10T2		1-02 *		T10S						330
D10T2				1						9-2/8		330
D10V2		D10R2		1-01 *		T10		1				331
D10V2		D10V2		1-02 *		T10S						331
D10V2				1						2-6/8		331
D11B1		D11B1		1-01 *		T04S		1				332
D11B1		D11D2		1-02 *		T04						332
D11B1				1						2-6/8		332
D11C1		D11A1		1-01 *		T04		1				333
D11C1		D11C1		1-02 *		T04S						333
D11C1				1						2-4/8		333
D11E2		D11E2		1-01 *		T04S		1				334
D11E2		D19K1		1-02 *		T04						334
D11E2				1						6-2/8		334

A/P	PIN NAME	ORDER PIN	BAY - ORDER	Q	DRAW RV PG Y	X	Z	REMARKS	LENGTH	EXCEPTIONS	RUN NUMBER
D11H2	B13T2		1-01 *		T04		1				335
D11H2	D11H2		1-02 *		T04S						335
D11H2			1						7-0/8		335
D11M2	D11M2		1-01 *		T04S		1				336
D11M2	D11P2		1-02 *		T04						336
D11M2			1						2-4/8		336
D11P1	D11P1		1-01 *		T04S		1				337
D11P1	D11V1		1-02 *		T04						337
D11P1			1						3-0/8		337
D12V2	C21T2		1-01 *		T03		1				338
D12V2	D12V2		1-02 *		T03S						338
D12V2			1						8-0/8		338
D13N1	D13N1									1-PIN RUN	339
D13N2	D13N2		1-01 *		T03S		1				340
D13N2	D17M1		1-02 *		T03						340
D13N2			1						4-0/8		340
D13S1	A14E2		1-01 *		T03		1				341
D13S1	D13S1		1-02 *		T03S						341
D13S1			1						12-0/8		341
D14D1	C10F1		1-01 *		T07		1				342
D14D1	C10J1		1-02 *		T07		2				342
D14D1	D14D1		1-03 *		T07S						342
D14D1			1						8-0/8		342
D14H2	D14H2		1-01 *		T03S		1				343
D14H2	D20L2		1-02 *		T03						343
D14H2			1						5-6/8		343
D14J1	C10H1		1-01 *		T07		1				344
D14J1	C10K1		1-02 *		T07		2				344
D14J1	D14J1		1-03 *		T07S						344
D14J1			1						8-4/8		344
D14M2	D14M2		1-01 *		T07S		1				345
D14M2	C19J2		1-02 *		T07						345
D14M2			1						6-4/8		345
D14U1	D07T2		1-01 *		T03		1				346
D14U1	D14U1		1-02 *		T03S						346
D14U1			1						5-4/8		346

A/P	PIN NAME	ORDER PIN	BAY - ORDER	Q	DRAW RV PG Y	X	Z	REMARKS	LENGTH	EXCEPTIONS	RUN NUMBER
D14V1	B11M2		1-01 *		T04		1				347
D14V1	D14V1		1-02 *		T04S						347
D14V1			1						9-0/8		347
D15J2	C11N1		1-01 *		T05		1				348
D15J2	D15J2		1-02 *		T05S						348
D15J2			1						5-4/8		348
D16J2	C18P2		1-01 *		T07		1				349
D16J2	D16J2		1-02 *		T07S						349
D16J2			1						4-6/8		349
D16R2	D19R2		1-01 *		T02S		1				350
D16R2	D19R1		1-02 *		T02						350
D16R2			1						3-4/8		350
D17E1	D12U2		1-01 *		T03		1				351
D17E1	D17E1		1-02 *		T03S						351
D17E1			1						5-2/8		351
D17J2	D10H2		1-01 *		T07		1				352
D17J2	D17J2		1-02 *		T07S						352
D17J2			1						3-0/8		352
D17L1	C11F1		1-01 *		T09		1				353
D17L1	D17L1		1-02 *		T09S						353
D17L1			1						6-6/8		353
D17P2	D12M2		1-01 *		T04		1				354
D17P2	D17P2		1-02 *		T04S						354
D17P2			1						5-0/8		354
D17S1	D07J1		1-01 *		T03		1				355
D17S1	D17S1		1-02 *		T03S						355
D17S1			1						7-4/8		355
D17V2	C06A1		1-01 *		T09		1				356
D17V2	D17V2		1-02 *		T09S						356
D17V2			1						10-2/8		356
D20F2	C19E2		1-01 *		T05		1				357
D20F2	D20F2		1-02 *		T05S						357
D20F2			1						5-4/8		357
D20N1	D20M2		1-01 *		T03		1				358
D20N1	D20N1		1-02 *		T03S						358
D20N1			1						2-4/8		358

D20N2		B11C1		1-01 *	T03				1						
D20N2		D20N2		1-02 *	T03S										359
D20N2				1											359
													10-6/8		359
D21F1		D07B1		1-01 *	T02				1						
D21F1		D21F1		1-02 *	T02S										360
D21F1				1											360
													9-4/8		360
D21F2		C20M1		1-01 *	T02				1						
D21F2		D21F2		1-02 *	T02S										361
D21F2				1											361
													4-6/8		361
D21J1		D21J1		1-01 *	T02				1						
D21J1		D21K2		1-02 *	T02S										362
D21J1				1											362
													2-4/8		362
D21K1		D21H2		1-01 *	T02				1						
D21K1		D21K1		1-02 *	T02S				2						363
D21K1		D19S1		1-03 *	T02										363
D21K1				1											363
													6-4/8		363
D21S2		C09P2		1-01 *	T02				1						
D21S2		D21S2		1-02 *	T02S										364
D21S2				1											364
													9-4/8		364
D21V2		C09U2		1-01 *	T02				1						
D21V2		D21V2		1-02 *	T02S										365
D21V2				1											365
													9-6/8		365
D22F1		D19B1		1-01 *	T02				1						
D22F1		D22F1		1-02 *	T02S										366
D22F1				1											366
													4-0/8		366
D22F2		D22F2		1-01 *	T07S				1						
D22F2		D22L2		1-02 *	T07										367
D22F2				1											367
													2-6/8		367
D22K1		D19E2		1-01 *	T02				1						
D22K1		D22K1		1-02 *	T02S										368
D22K1				1											368
													3-6/8		368
D22K2		D19D2		1-01 *	T02				1						
D22K2		D22K2		1-02 *	T02S										369
D22K2				1											369
													4-0/8		369

D22N1		D19M2		1-01 *	T02				1						
D22N1		D22N1		1-02 *	T02S										370
D22N1				1											370
													3-6/8		370
D22N2		D22N2		1-01 *	T07S				1						
D22N2		D22P1		1-02 *	T07										371
D22N2				1											371
													2-6/8		371
D22S1		C17L1		1-01 *	T07				1						
D22S1		D22M2		1-02 *	T07				2						372
D22S1		D22S1		1-03 *	T07S										372
D22S1				1											372
													9-2/8		372
D22S2		D22S2		1-01 *			I		1						
D22S2		B12U2		1-02 *			I								373
D22S2				1											373
													9-4/8		373
D23D2		C22D2		1-01 *	T02				1						
D23D2		C22N1		1-02 *	T02				2						374
D23D2		C22V2		1-03 *	T02				1						374
D23D2		D23D2		1-04 *	T02S										374
D23D2				1											374
													10-2/8		374
D23F2		C20J1		1-01 *	T02				1						
D23F2		D23F2		1-02 *	T02S										375
D23F2				1											375
													5-4/8		375
D23J2		D12R1		1-01 *	T04				1						
D23J2		D23J2		1-02 *	T04S										376
D23J2				1											376
													8-4/8		376
D23L2		D07E1		1-01 *	T03				1						
D23L2		D23L2		1-02 *	T03S										377
D23L2				1											377
													11-0/8		377
D23R2		C07L1		1-01 *	T19				1						
D23R2		D23R2		1-02 *	T19S										378
D23R2				1											378
													12-0/8		378
DAT EN	H	C13S2		1-01 *	T06				2						
DAT EN	H	C13L2		1-02 *	T06				1						379
DAT EN	H	C13E2		1-03 *	T06				2						379
DAT EN	H	C10B1		1-04 *	T06				1						379
DAT EN	H	C10H1		1-05 *	T06				2						379
DAT EN	H	C10N1		1-06 *	T06				1						379
DAT EN	H	D10M1		1-07 *	T05										379
DAT EN				1											379
													21-0/8		379

RUN NAME	A/P	PIN NAME	ORDER PIN	BAY - ORDER	Q	DRAW RV PG Y	X	Z	REMARKS	LENGTH	EXCEPTIONS	RUN NUMBER
DAT EN	L	C21M2		1-01 *		T05S		1				380
DAT EN	L	C16D1		1-02 *		T06		2				380
DAT EN	L	C16K1		1-03 *		T06		1				380
DAT EN	L	C16R1		1-04 *		T06		2				380
DAT EN	L	D16L1		1-05 *		T05						380
DAT EN				1						15-6/8		380
DAT SHIFT ENB	H	A15F2		1-01 *		T15		1				381
DAT SHIFT ENB	H	A15J1		1-02 *		T14		2				381
DAT SHIFT ENB	H	A15T2		1-03 *		T16		1				381
DAT SHIFT ENB	H	A17P1		1-04 *		T16		2				381
DAT SHIFT ENB	H	A17J1		1-05 *		T16		1				381
DAT SHIFT ENB	H	A17F2		1-06 *		T16		2				381
DAT SHIFT ENB	H	A17M2		1-07 *		T16		1				381
DAT SHIFT ENB	H	A17T2		1-08 *		T16		2				381
DAT SHIFT ENB	H	B17F2		1-09 *		T14		1				381
DAT SHIFT ENB	H	B17J1		1-10 *		T14		2				381
DAT SHIFT ENB	H	B17M2		1-11 *		T14		1				381
DAT SHIFT ENB	H	B17P1		1-12 *		T14		2				381
DAT SHIFT ENB	H	B17T2		1-13 *		T14		1				381
DAT SHIFT ENB	H	B15T2		1-14 *		T15		2				381
DAT SHIFT ENB	H	B15M2		1-15 *		T15		1				381
DAT SHIFT ENB	H	B15F2		1-16 *		T15		2				381
DAT SHIFT ENB	H	B15J1		1-17 *		T15		1				381
DAT SHIFT ENB	H	B15P1		1-18 *		T15		2				381
DAT SHIFT ENB	H	C11H2		1-19 *		T08		1				381
DAT SHIFT ENB	H	C10J2		1-20 *		T08S						381
DAT SHIFT ENB				1						58-6/8		381
DAT TO BUS	L	A09V2		1-01 *		T17		1				382
DAT TO BUS	L	B09V2		1-02 *		T18		2				382
DAT TO BUS	L	C06D2		1-03 *		T09S						382
DAT TO BUS				1						9-2/8		382
DAT00(0)	H	A15S2		1-01 *		T16		1				383
DAT00(0)	H	A16M1		1-02 *		T16S						383
DAT00(0)				1						3-0/8		383
DAT00(1)	H	A17H2		1-01 *		T16		2				384
DAT00(1)	H	A16N1		1-02 *		T16S		1				384
DAT00(1)	H	B09R1		1-03 *		T18						384
DAT00(1)				1						10-2/8		384
DAT01(0)	H	A15E2		1-01 *		T15		1				385
DAT01(0)	H	B14M1		1-02 *		T15S						385
DAT01(0)				1						6-2/8		385

RUN NAME	A/P	PIN NAME	ORDER PIN	BAY - ORDER	Q	DRAW RV PG Y	X	Z	REMARKS	LENGTH	EXCEPTIONS	RUN NUMBER
DAT01(1)	H	B15H2		1-01 *		T15		2				386
DAT01(1)	H	B14N1		1-02 *		T15S		1				386
DAT01(1)	H	B09M2		1-03 *		T18						386
DAT01(1)				1						8-0/8		386
DAT02(0)	H	A15H1		1-01 *		T14		1				387
DAT02(0)	H	B16M1		1-02 *		T14S						387
DAT02(0)				1						5-6/8		387
DAT02(1)	H	B17H2		1-01 *		T14		2				388
DAT02(1)	H	B16N1		1-02 *		T14S		1				388
DAT02(1)	H	B09M1		1-03 *		T18						388
DAT02(1)				1						9-2/8		388
DAT03(0)	H	A16E1		1-01 *		T16S		1				389
DAT03(0)	H	A17H1		1-02 *		T16						389
DAT03(0)				1						3-0/8		389
DAT03(1)	H	A16F1		1-01 *		T16S		2				390
DAT03(1)	H	A17R1		1-02 *		T16		1				390
DAT03(1)	H	B09J2		1-03 *		T18						390
DAT03(1)				1						10-4/8		390
DAT04(0)	H	B14E1		1-01 *		T15S		1				391
DAT04(0)	H	B15H1		1-02 *		T15						391
DAT04(0)				1						3-0/8		391
DAT04(1)	H	B15R1		1-01 *		T15		2				392
DAT04(1)	H	B14F1		1-02 *		T15S		1				392
DAT04(1)	H	B09J1		1-03 *		T18						392
DAT04(1)				1						8-4/8		392
DAT05(0)	H	B16E1		1-01 *		T14S		1				393
DAT05(0)	H	B17H1		1-02 *		T14						393
DAT05(0)				1						3-0/8		393
DAT05(1)	H	B17R1		1-01 *		T14		2				394
DAT05(1)	H	B16F1		1-02 *		T14S		1				394
DAT05(1)	H	B09E2		1-03 *		T18						394
DAT05(1)				1						9-2/8		394
DAT06(0)	H	A16U2		1-01 *		T16S		1				395
DAT06(0)	H	A17N1		1-02 *		T16						395
DAT06(0)				1						3-2/8		395

RUN NAME	A/P	PIN NAME	ORDER PIN	BAY - ORDER	Q	DRAW	RV	PG	Y	X	Z	REMARKS	LENGTH	EXCEPTIONS	RUN NUMBER
DAT06(1)	H	A17K1		1-01 *		T16					2				396
DAT06(1)	H	A16V2		1-02 *		T16S					1				396
DAT06(1)	H	B09E1		1-03 *		T18									396
DAT06(1)				1									10-2/8		396
DAT07(0)	H	B14U2		1-01 *		T15S					1				397
DAT07(0)	H	B15N1		1-02 *		T15									397
DAT07(0)				1									3-2/8		397
DAT07(1)	H	B14V2		1-01 *		T15S					2				398
DAT07(1)	H	B15K1		1-02 *		T15					1				398
DAT07(1)	H	B09B1		1-03 *		T18									398
DAT07(1)				1									9-0/8		398
DAT08(0)	H	B16U2		1-01 *		T14S					1				399
DAT08(0)	H	B17N1		1-02 *		T14									399
DAT08(0)				1									3-2/8		399
DAT08(1)	H	A09R1		1-01 *		T17					1				400
DAT08(1)	H	B17K1		1-02 *		T14					2				400
DAT08(1)	H	B16V2		1-03 *		T14S									400
DAT08(1)				1									10-6/8		400
DAT09(0)	H	A16R2		1-01 *		T16S					1				401
DAT09(0)	H	A17E2		1-02 *		T16									401
DAT09(0)				1									3-6/8		401
DAT09(1)	H	A16S2		1-01 *		T16S					2				402
DAT09(1)	H	A15U2		1-02 *		T16					1				402
DAT09(1)	H	A09M2		1-03 *		T17									402
DAT09(1)				1									8-6/8		402
DAT10(0)	H	B14R2		1-01 *		T15S					1				403
DAT10(0)	H	B15E2		1-02 *		T15									403
DAT10(0)				1									3-6/8		403
DAT10(1)	H	A09M1		1-01 *		T17					2				404
DAT10(1)	H	A15H2		1-02 *		T15					1				404
DAT10(1)	H	B14S2		1-03 *		T15S									404
DAT10(1)				1									12-0/8		404
DAT11(0)	H	B16R2		1-01 *		T14S					1				405
DAT11(0)	H	B17E2		1-02 *		T14									405
DAT11(0)				1									3-6/8		405

RUN NAME	A/P	PIN NAME	ORDER PIN	BAY - ORDER	Q	DRAW	RV	PG	Y	X	Z	REMARKS	LENGTH	EXCEPTIONS	RUN NUMBER
DAT11(1)	H	A09J2		1-01 *		T17					2				406
DAT11(1)	H	A15K1		1-02 *		T14					1				406
DAT11(1)	H	B16S2		1-03 *		T14S									406
DAT11(1)				1									11-2/8		406
DAT12(0)	H	A17L2		1-01 *		T16					2				407
DAT12(0)	H	A16J2		1-02 *		T16S					1				407
DAT12(0)	H	C16M1		1-03 *		T06									407
DAT12(0)				1									11-2/8		407
DAT12(1)	H	A09J1		1-01 *		T17					1				408
DAT12(1)	H	A16K2		1-02 *		T16S									408
DAT12(1)				1									6-0/8		408
DAT13(0)	H	B14J2		1-01 *		T15					2				409
DAT13(0)	H	B15L2		1-02 *		T15					1				409
DAT13(0)	H	C16F1		1-03 *		T06									409
DAT13(0)				1									7-4/8		409
DAT13(1)	H	A09E2		1-01 *		T17					1				410
DAT13(1)	H	B14K2		1-02 *		T15									410
DAT13(1)				1									6-6/8		410
DAT14(0)	H	B17L2		1-01 *		T14					2				411
DAT14(0)	H	B16J2		1-02 *		T14S					1				411
DAT14(0)	H	C16A1		1-03 *		T06									411
DAT14(0)				1									7-2/8		411
DAT14(1)	H	A09E1		1-01 *		T17					1				412
DAT14(1)	H	B16K2		1-02 *		T14S									412
DAT14(1)				1									7-4/8		412
DAT15(0)	H	A17S2		1-01 *		T16					2				413
DAT15(0)	H	A14E1		1-02 *		T16S					1				413
DAT15(0)	H	C13R2		1-03 *		T06									413
DAT15(0)				1									13-4/8		413
DAT15(1)	H	A09B1		1-01 *		T17					1				414
DAT15(1)	H	A14F1		1-02 *		T16S									414
DAT15(1)				1									5-0/8		414
DAT16(0)	H	A14U2		1-01 *		T15S					1				415
DAT16(0)	H	B15S2		1-02 *		T15					2				415
DAT16(0)	H	C13K2		1-03 *		T06									415
DAT16(0)				1									9-4/8		415

RUN NAME	A/P	PIN NAME	ORDER PIN	BAY - ORDER	Q	DRAW RV PG Y	X	Z	REMARKS	LENGTH	EXCEPTIONS	RUN NUMBER
DAT16(1)	H	A14V2		1-01 *		T14S		1				
DAT16(1)	H	B09P1		1-02 *		T18						416
DAT16(1)				1								416
										6-2/8		416
DAT17(0)	H	A14R2		1-01 *		T14S		1				
DAT17(0)	H	B17S2		1-02 *		T14		2				417
DAT17(0)	H	C13D2		1-03 *		T06						417
DAT17(0)				1								417
										10-4/8		417
DAT17(1)	H	A14S2		1-01 *		T14S		1				
DAT17(1)	H	B09L2		1-02 *		T18						418
DAT17(1)				1								418
										5-6/8		418
DATA	H	D16D1		1-01 *		T07		1				
DATA	H	D18K2		1-02 *		T07S						419
DATA				1								419
										3-6/8		419
DATA	L	D20B1		1-01 *		T05		1				
DATA	L	D20E2		1-02 *		T05		2				420
DATA	L	D16E1		1-03 *		T07S						420
DATA				1								420
										7-2/8		420
DATFIN	H	C19P1		1-01 *		T05		2				
DATFIN	H	C20S2		1-02 *		T05		1				421
DATFIN	H	D20C1		1-03 *		T05S						421
DATFIN				1								421
										7-0/8		421
DATM ENB	L	C08S1		1-01 *		T08		1				
DATM ENB	L	D16B1		1-02 *		T03S						422
DATM ENB				1								422
										7-0/8		422
DATM(0)	H	D07S2		1-01 *		T03S		1				
DATM(0)	H	D15T2		1-02 *		T03						423
DATM(0)				1								423
										6-4/8		423
DATM(1)	H	A09L2		1-01 *		T17		1				
DATM(1)	H	D07R2		1-02 *		T03S						424
DATM(1)				1								424
										11-2/8		424
DECODE DLY	H	C06T2		1-01 *		T04S		2				
DECODE DLY	H	B13P1		1-02 *		T04		1				425
DECODE DLY	H	D13T2		1-03 *		T04						425
DECODE DLY				1								425
										15-0/8		425

RUN NAME	A/P	PIN NAME	ORDER PIN	BAY - ORDER	Q	DRAW RV PG Y	X	Z	REMARKS	LENGTH	EXCEPTIONS	RUN NUMBER
DECODE DLY	L	B13N1		1-01 *		T04S		1				
DECODE DLY	L	C06S2		1-02 *		T04		2				426
DECODE DLY	L	D08M2		1-03 *		T04		1				426
DECODE DLY	L	D20U2		1-04 *		T04		2				426
DECODE DLY	L	C21N2		1-05 *		T04						426
DECODE DLY				1								426
										26-6/8		426
DINHB(0)	H	B13U2		1-01 *		T04		1				
DINHB(0)	H	C06S1		1-02 *		T11S						427
DINHB(0)				1								427
										7-0/8		427
DINHB(1)	H	A12U2		1-01 *		T11S		2				
DINHB(1)	H	A08D1		1-02 *		T17		1				428
DINHB(1)	H	C06R1		1-03 *		T11						428
DINHB(1)				1								428
										14-4/8		428
DO	H	D21L1		1-01 *		T05		1				
DO	H	D21P1		1-02 *		T05		2				429
DO	H	D16V2	D14L2	1-03 *		T05S		1				429
DO	H	D14L2		1-04 *		T07						429
DO				1								429
										11-2/8		429
DO	L	B11B1		1-01 *		T03		1				
DO	L	D14S1		1-02 *		T03		2				430
DO	L	D16U2		1-03 *		T05		1				430
DO	L	D23P2		1-04 *		T05		2				430
DO	L	C21H2		1-05 *		T05S						430
DO				1								430
										25-6/8		430
DO CLEAR	H	C11R2		1-01 *		T05S		1				
DO CLEAR	H	D13J2		1-02 *		T03						431
DO CLEAR				1								431
										4-6/8		431
DO CLEAR	L	C11P2		1-01 *		T05		1				
DO CLEAR	L	D21N1		1-02 *		T05S						432
DO CLEAR				1								432
										8-2/8		432
DO STROBE	H	D16N2				T05S					1=PIN RUN	433

A/P	PIN NAME	ORDER PIN	BAY - ORDER	Q	DRAW	RV	PG	Y	X	Z	REMARKS	LENGTH	EXCEPTIONS	RUN NUMBER
GND 01	A01B2		1-01 *		T20					1				449
GND 01	A01C2		1-02 *							2				449
GND 01	A01N1		1-03 *		T20					1				449
GND 01	A01R1		1-04 *		T20					2				449
GND 01	A01P1		1-05 *		T20					1				449
GND 01	A01S1		1-06 *		T20					2				449
GND 01	A01T1		1-07 *							1				449
GND 01	A01V2		1-08 *		T20					2				449
GND 01	B01B2		1-09 *		T20					1				449
GND 01	B01D1		1-10 *		T20					2				449
GND 01	B01C2		1-11 *							1				449
GND 01	B01E1		1-12 *		T20					2				449
GND 01	B01T1		1-13 *							1				449
GND 01	B01V2		1-14 *		T20					2				449
GND 01	C01C2		1-15 *							1				449
GND 01	C01T1		1-16 *							2				449
GND 01	D01C2		1-17 *							1				449
GND 01	D01T1		1-18 *											449
GND 01			1											449
												50-6/8		449
GND 02	A02B2		1-01 *		T20					1				450
GND 02	A02C2		1-02 *							2				450
GND 02	A02N1		1-03 *		T20					1				450
GND 02	A02R1		1-04 *		T20					2				450
GND 02	A02P1		1-05 *		T20					1				450
GND 02	A02S1		1-06 *		T20					2				450
GND 02	A02T1		1-07 *							1				450
GND 02	A02V2		1-08 *		T20					2				450
GND 02	B02B2		1-09 *		T20					1				450
GND 02	B02D1		1-10 *		T20					2				450
GND 02	B02C2		1-11 *							1				450
GND 02	B02E1		1-12 *		T20					2				450
GND 02	B02T1		1-13 *							1				450
GND 02	B02V2		1-14 *		T20					2				450
GND 02	C02C2		1-15 *							1				450
GND 02	C02T1		1-16 *							2				450
GND 02	D02C2		1-17 *											450
GND 02			1											450
												46-6/8		450

A/P	PIN NAME	ORDER PIN	BAY - ORDER	Q	DRAW	RV	PG	Y	X	Z	REMARKS	LENGTH	EXCEPTIONS	RUN NUMBER
GND 03	A03C2		1-01 *							1				451
GND 03	A03T1		1-02 *							2				451
GND 03	B03C2		1-03 *							1				451
GND 03	B03T1		1-04 *							2				451
GND 03	C03C2		1-05 *							1				451
GND 03	C03T1		1-06 *							2				451
GND 03	D03C2		1-07 *							1				451
GND 03	D03T1		1-08 *											451
GND 03			1											451
												26-2/8		451
GND 04	A04C2		1-01 *							1				452
GND 04	A04T1		1-02 *							2				452
GND 04	B04A1		1-03 *		T19					1				452
GND 04	B04C2		1-04 *							2				452
GND 04	B04T1		1-05 *							1				452
GND 04	C04C2		1-06 *							2				452
GND 04	C04T1		1-07 *							1				452
GND 04	D04C2		1-08 *							2				452
GND 04	D04L2		1-09 *		T04					1				452
GND 04	D04L1		1-10 *		T04					2				452
GND 04	D04T1		1-11 *											452
GND 04			1											452
												33-4/8		452
GND 05	A05C2		1-01 *							1				453
GND 05	A05T1		1-02 *							2				453
GND 05	B05C2		1-03 *							1				453
GND 05	B05J2	B05R1	1-04 *		T19					2				453
GND 05	B05R1		1-05 *							1				453
GND 05	B05T1		1-06 *							2				453
GND 05	C05C2		1-07 *							1				453
GND 05	C05T1		1-08 *							2				453
GND 05	D05C2		1-09 *							1				453
GND 05	D05T1		1-10 *											453
GND 05			1											453
												31-0/8		453
GND 06	A06C2		1-01 *							1				454
GND 06	A06T1		1-02 *							2				454
GND 06	B06C2		1-03 *							1				454
GND 06	B06C1		1-04 *		T08					2				454
GND 06	B06P1		1-05 *		T08					1				454
GND 06	B06R1		1-06 *		T08					2				454
GND 06	B06T1		1-07 *							1				454
GND 06	C06C2		1-08 *							2				454
GND 06	C06T1		1-09 *							1				454
GND 06	D06C2		1-10 *							2				454
GND 06	D06T1		1-11 *											454
GND 06			1											454
												33-2/8		454

RUN NAME	A/P	PIN NAME	ORDER PIN	BAY - ORDER	Q	DRAW RV PG Y	X	Z	REMARKS	LENGTH	EXCEPTIONS	RUN NUMBER
DO STROBE	L	C23H2		1-01 *		T02		1				434
DO STROBE	L	D21S1		1-02 *		T05S		2				434
DO STROBE	L	D16M2		1-03 *		T05		1				434
DO STROBE	L	C12S1		1-04 *		T05		2				434
DO STROBE	L	C09N2		1-05 *		T02		1				434
DO STROBE	L	C07M1		1-06 *		T19		2				434
DO STROBE	L	D07M1		1-07 *		T02		1				434
DO STROBE	L	D05K2		1-08 *		T04						434
DO STROBE				1						32-6/8		434
DTP1	H	C23R1		1-01 *		T02		2				435
DTP1	H	D14R1		1-02 *		T03		1				435
DTP1	H	C04H2		1-03 *		T08S						435
DTP1				1						16-6/8		435
END2(0)	H	B24D2		1-01 *		T24		1				436
END2(0)	H	D17M2		1-02 *		T04		2				436
END2(0)	H	D15M1		1-03 *		T03		1				436
END2(0)	H	D07L1		1-04 *		T03S						436
END2(0)				1						19-6/8		436
END2(1)	H	A09A1		1-01 *		T17		1				437
END2(1)	H	D07F2		1-02 *		T03						437
END2(1)				1						11-2/8		437
ERROR	H	A08B1		1-01 *			R1	1				438
ERROR	H	D12S2		1-02 *			R1	2				438
ERROR	H	D15V2		1-03 *			R1					438
ERROR				1						17-2/8		438
ERROR	L	D22R2		1-01 *			R1	1				439
ERROR	L	D23R1		1-02 *			R1	2				439
ERROR	L	C23D2		1-03 *			R1	1				439
ERROR	L	B24N2		1-04 *			R1	2				439
ERROR	L	C20K1		1-05 *			R1	1				439
ERROR	L	D12T2		1-06 *			I					439
ERROR				1						26-2/8		439
ERROR DISABLE	H	B12R1		1-01 *		T12		2				440
ERROR DISABLE	H	D14N1		1-02 *		T03S		1				440
ERROR DISABLE	H	D13R2		1-03 *		T03						440
ERROR DISABLE				1						10-4/8		440

RUN NAME	A/P	PIN NAME	ORDER PIN	BAY - ORDER	Q	DRAW RV PG Y	X	Z	REMARKS	LENGTH	EXCEPTIONS	RUN NUMBER
ERROR STP	L	C23D1		1-01 *		T04		2				441
ERROR STP	L	C21R2		1-02 *		T04		1				441
ERROR STP	L	D12N2		1-03 *		T04S		2				441
ERROR STP	L	D08P1		1-04 *		T04						441
ERROR STP				1						16-6/8		441
FCT1(0)	H	A06P1		1-01 *		T11S		1				442
FCT1(0)	H	B24K2		1-02 *		T24						442
FCT1(0)				1						12-4/8		442
FCT1(1)	H	A12L2		1-01 *		T11S		1				443
FCT1(1)	H	A06N1		1-02 *		T11		2				443
FCT1(1)	H	B08R1		1-03 *		T18		1				443
FCT1(1)	H	C12V1		1-04 *		T05						443
FCT1(1)				1						17-6/8		443
FCT2(0)	H	A06M1		1-01 *		T11S		1				444
FCT2(0)	H	B24P2		1-02 *		T24						444
FCT2(0)				1						12-6/8		444
FCT2(1)	H	B08L1		1-01 *		T18		1				445
FCT2(1)	H	A06L1		1-02 *		T11		2				445
FCT2(1)	H	A12T2		1-03 *		T11S		1				445
FCT2(1)	H	C12U2		1-04 *		T05						445
FCT2(1)				1						19-2/8		445
FCT3(0)	H	B06J2		1-01 *		T08		2				446
FCT3(0)	H	C06N2		1-02 *		T11S		1				446
FCT3(0)	H	C17L2		1-03 *		T07		2				446
FCT3(0)	H	C21F1		1-04 *		T08		1				446
FCT3(0)	H	D22J2		1-05 *		T02		2				446
FCT3(0)	H	B24F2		1-06 *		T24						446
FCT3(0)				1						31-4/8		446
FCT3(1)	H	A12M2		1-01 *		T11S		2				447
FCT3(1)	H	B08M1		1-02 *		T18		1				447
FCT3(1)	H	C06M2		1-03 *		T11		2				447
FCT3(1)	H	C12V2		1-04 *		T05		1				447
FCT3(1)	H	C21B1		1-05 *		T08						447
FCT3(1)				1						24-4/8		447
FORWARD	L	A19V1	C21U1	1-01 *		T12		1				448
FORWARD	L	C21U1		1-02 *								448
FORWARD				1						7-6/8		448

RUN NAME	A/P PIN NAME	ORDER PIN	BAY - ORDER	Q	DRAW	RV	PG	Y	X	Z	REMARKS	LENGTH	EXCEPTIONS	RUN NUMBER
GND 07	A07C2		1-01 *							1				455
GND 07	A07F1		1-02 *		T21					2				455
GND 07	A07T1		1-03 *							1				455
GND 07	B07C2		1-04 *							2				455
GND 07	B07T1		1-05 *							1				455
GND 07	C07C2		1-06 *							2				455
GND 07	C07T1		1-07 *							1				455
GND 07	D07C2		1-08 *							2				455
GND 07	D07T1		1-09 *											455
GND 07			1									28-4/8		455
GND 08	A08A1		1-01 *		T17					1				456
GND 08	A08C2		1-02 *							2				456
GND 08	A08T1		1-03 *							1				456
GND 08	B08C2		1-04 *							2				456
GND 08	B08P1		1-05 *		T18					1				456
GND 08	B08T1		1-06 *							2				456
GND 08	C08C2		1-07 *							1				456
GND 08	C08T1		1-08 *							2				456
GND 08	D08C2		1-09 *							1				456
GND 08	D08T1		1-10 *											456
GND 08			1									31-4/8		456
GND 09	A09C2		1-01 *							1				457
GND 09	A09T1		1-02 *							2				457
GND 09	B09C2		1-03 *							1				457
GND 09	B09T1		1-04 *							2				457
GND 09	C09C2		1-05 *							1				457
GND 09	C09T1		1-06 *							2				457
GND 09	D09C2		1-07 *							1				457
GND 09	D09T1		1-08 *											457
GND 09			1									26-2/8		457
GND 10	A10C2		1-01 *							1				458
GND 10	A10T1		1-02 *							2				458
GND 10	B10C2		1-03 *							1				458
GND 10	B10T1		1-04 *							2				458
GND 10	C10C2		1-05 *							1				458
GND 10	C10T1		1-06 *							2				458
GND 10	D10C2		1-07 *							1				458
GND 10	D10T1		1-08 *											458
GND 10			1									26-2/8		458

RUN NAME	A/P PIN NAME	ORDER PIN	BAY - ORDER	Q	DRAW	RV	PG	Y	X	Z	REMARKS	LENGTH	EXCEPTIONS	RUN NUMBER
GND 11	A11C2		1-01 *							2				459
GND 11	A11T1		1-02 *							1				459
GND 11	B11C2		1-03 *							2				459
GND 11	B11K1		1-04 *		T08					1				459
GND 11	B11T1		1-05 *							2				459
GND 11	C11C1		1-06 *							1				459
GND 11	C11C2		1-07 *							2				459
GND 11	C11M2		1-08 *							1				459
GND 11	C11N2		1-09 *							2				459
GND 11	C11T1		1-10 *							1				459
GND 11	D11C2		1-11 *							2				459
GND 11	D11K2		1-12 *		T04					1				459
GND 11	D11L2		1-13 *		T04					2				459
GND 11	D11T1		1-14 *											459
GND 11			1									40-6/8		459
GND 12	A12C2		1-01 *							1				460
GND 12	A12C1		1-02 *		T11					2				460
GND 12	A12F1		1-03 *		T11					1				460
GND 12	A12J1		1-04 *		T11					2				460
GND 12	A12N1		1-05 *		T11					1				460
GND 12	B12C2		1-06 *							2				460
GND 12	B12T1		1-07 *							1				460
GND 12	C12C2		1-08 *							2				460
GND 12	C12T1		1-09 *							1				460
GND 12	C12U1		1-10 *		T05					2				460
GND 12	D12C2		1-11 *							1				460
GND 12	D12T1		1-12 *											460
GND 12			1									35-6/8		460

HND288,V16(16) 03/31/72

A/P	PIN NAME	ORDER PIN	BAY - ORDER	Q	DRAW RV PG Y	X	Z	REMARKS	LENGTH
GND 13	A13C2		1-01 *				2		
GND 13	A13T1		1-02 *				1		
GND 13	B13C2		1-03 *				2		
GND 13	B13T1		1-04 *				1		
GND 13	C13C2		1-05 *				2		
GND 13	C13F2		1-06 *		T06		1		
GND 13	C13E1		1-07 *		T06		2		
GND 13	C13H2		1-08 *		T06		1		
GND 13	C13L1		1-09 *		T06		2		
GND 13	C13M2		1-10 *		T06		1		
GND 13	C13N2		1-11 *		T06		2		
GND 13	C13T2		1-12 *		T06		1		
GND 13	C13T1		1-13 *				2		
GND 13	C13S1		1-14 *		T06		1		
GND 13	C13U2		1-15 *		T06		2		
GND 13	D13C2		1-16 *				1		
GND 13	D13T1		1-17 *						
GND 13			1						48-4/8
GND 14	A14C2		1-01 *				1		
GND 14	A14T1		1-02 *				2		
GND 14	B14C2		1-03 *				1		
GND 14	B14T1		1-04 *				2		
GND 14	C14C2		1-05 *				1		
GND 14	C14T1		1-06 *				2		
GND 14	D14C2		1-07 *				1		
GND 14	D14T1		1-08 *						
GND 14			1						26-2/8
GND 15	A15C2		1-01 *				1		
GND 15	A15T1		1-02 *				2		
GND 15	B15C2		1-03 *				1		
GND 15	B15T1		1-04 *				2		
GND 15	C15C2		1-05 *				1		
GND 15	C15T1		1-06 *				2		
GND 15	D15C2		1-07 *				1		
GND 15	D15T1		1-08 *						
GND 15			1						26-2/8

HND288,V16(16) 03/31/72

A/P	PIN NAME	ORDER PIN	BAY - ORDER	Q	DRAW RV PG Y	X	Z	REMARKS	LENGTH
GND 16	A16C2		1-01 *				1		
GND 16	A16T1		1-02 *				2		
GND 16	B16C2		1-03 *				1		
GND 16	B16T1		1-04 *				2		
GND 16	C16C2		1-05 *				1		
GND 16	C16T1		1-06 *				2		
GND 16	D16C2		1-07 *				1		
GND 16	D16T1		1-08 *						
GND 16			1						26-2/8
GND 17	A17C2		1-01 *				1		
GND 17	A17T1		1-02 *				2		
GND 17	B17C2		1-03 *				1		
GND 17	B17T1		1-04 *				2		
GND 17	C17C2		1-05 *				1		
GND 17	C17T1		1-06 *				2		
GND 17	D17C2		1-07 *				1		
GND 17	D17T1		1-08 *						
GND 17			1						26-2/8
GND 18	A18C2		1-01 *				2		
GND 18	A18T1		1-02 *				1		
GND 18	A18U1		1-03 *		T12		2		
GND 18	B18C2		1-04 *				1		
GND 18	B18T1		1-05 *				2		
GND 18	C18C2		1-06 *				1		
GND 18	C18T1		1-07 *				2		
GND 18	D18C2		1-08 *				1		
GND 18	D18T1		1-09 *						
GND 18			1						28-6/8
GND 19	A19C1		1-01 *		T12		1		
GND 19	A19C2		1-02 *				2		
GND 19	A19M2		1-03 *		T12		1		
GND 19	A19N2		1-04 *		T12		2		
GND 19	A19T1	A19U2	1-05 *				1		
GND 19	A19U2		1-06 *				2		
GND 19	B19C2		1-07 *				1		
GND 19	B19M2		1-08 *		T12		2		
GND 19	B19T1		1-09 *				1		
GND 19	C19C2		1-10 *				2		
GND 19	C19T1		1-11 *				1		
GND 19	D19C2		1-12 *				2		
GND 19	D19T1		1-13 *						
GND 19			1						38-0/8

RUN NAME	A/P	PIN NAME	ORDER PIN	BAY - ORDER	Q	DRAW RV PG Y	X	Z	REMARKS	LENGTH	RUN NUMBER
GND 20		A20D2		1-01 *		T12		2			468
GND 20		A20C1		1-02 *		T12		1			468
GND 20		A20A1		1-03 *		T12		2			468
GND 20		A20C2		1-04 *				1			468
GND 20		A20F2		1-05 *		T12		2			468
GND 20		A20F1		1-06 *		T12		1			468
GND 20		A20J2		1-07 *		T12		2			468
GND 20		A20N2		1-08 *		T12		1			468
GND 20		A20R1		1-09 *		T12		2			468
GND 20		A20L2		1-10 *		T12		1			468
GND 20		A20K1		1-11 *		T12		2			468
GND 20		A20N1		1-12 *		T12		1			468
GND 20		A20R2		1-13 *		T12		2			468
GND 20		A20T1		1-14 *				1			468
GND 20		A20U1		1-15 *		T12		2			468
GND 20		A20U2		1-16 *		T12		1			468
GND 20		B20C2		1-17 *				2			468
GND 20		B20T1		1-18 *				1			468
GND 20		C20C2		1-19 *				2			468
GND 20		C20T1		1-20 *				1			468
GND 20		D20C2		1-21 *				2			468
GND 20		D20T1		1-22 *							468
GND 20				1						62-4/8	468
GND 21		A21C2		1-01 *				1			469
GND 21		A21T1		1-02 *				2			469
GND 21		B21C2		1-03 *				1			469
GND 21		B21T1		1-04 *				2			469
GND 21		C21C2		1-05 *				1			469
GND 21		C21T1		1-06 *				2			469
GND 21		D21C2		1-07 *				1			469
GND 21		D21T1		1-08 *							469
GND 21				1						26-2/8	469

RUN NAME	A/P	PIN NAME	ORDER PIN	BAY - ORDER	Q	DRAW RV PG Y	X	Z	REMARKS	LENGTH	RUN NUMBER
GND 22		A22C2		1-01 *				2			470
GND 22		A22J2		1-02 *		T12		1			470
GND 22		A22K2		1-03 *		T12		2			470
GND 22		A22R2		1-04 *		T12		1			470
GND 22		A22T1		1-05 *				2			470
GND 22		A22T2		1-06 *		T12		1			470
GND 22		A22S2		1-07 *		T12		2			470
GND 22		A22U2		1-08 *		T12		1			470
GND 22		B22C2		1-09 *				2			470
GND 22		B22F2		1-10 *		T12		1			470
GND 22		B22E2		1-11 *		T12		2			470
GND 22		B22L2		1-12 *		T12		1			470
GND 22		B22M2		1-13 *		T12		2			470
GND 22		B22T1		1-14 *				1			470
GND 22		C22C2		1-15 *				2			470
GND 22		C22T1		1-16 *				1			470
GND 22		D22C2		1-17 *				2			470
GND 22		D22T1		1-18 *							470
GND 22				1						50-4/8	470
GND 23		A23C2		1-01 *				1			471
GND 23		A23T1		1-02 *				2			471
GND 23		B23C2		1-03 *				1			471
GND 23		B23T1		1-04 *				2			471
GND 23		C23C2		1-05 *				1			471
GND 23		C23T1		1-06 *				2			471
GND 23		D23C2		1-07 *				1			471
GND 23		D23T1		1-08 *							471
GND 23				1						26-2/8	471
GND 24		A24C2		1-01 *				1			472
GND 24		A24T1		1-02 *				2			472
GND 24		B24C2		1-03 *				1			472
GND 24		B24T1		1-04 *				2			472
GND 24		C24C2		1-05 *				1			472
GND 24		C24T1		1-06 *				2			472
GND 24		D24C2		1-07 *				1			472
GND 24		D24T1		1-08 *							472
GND 24				1						26-2/8	472
GO	L	A19R1		1-01 *		T12		1			473
GO	L	C21S2		1-02 *		T04S					473
GO				1						8-2/8	473

RUN NAME	A/P	PIN NAME	ORDER PIN	BAY - ORDER	Q	DRAW	RV	PG	Y	X	Z	REMARKS	LENGTH	EXCEPTIONS	RUN NUMBER
ILO	H	A09H1		1-01 *		T17					1				474
ILO	H	D12V1		1-02 *		T03					2				474
ILO	H	D14S2		1-03 *		T03S									474
ILO				1									16-2/8		474
ILO	L	B24R2		1-01 *		T24					1				475
ILO	L	D17L2		1-02 *		T04					2				475
ILO	L	D19R1		1-03 *		T03					1				475
ILO	L	D12U1		1-04 *		T03S									475
ILO				1									16-4/8		475
IN	H	A08F1		1-01 *		T17					1				476
IN	H	B08F1		1-02 *		T18					2				476
IN	H	B04M1		1-03 *		T19S					1				476
IN	H	C07B1		1-04 *		T09					2				476
IN	H	C06E2		1-05 *		T19					1				476
IN	H	C07E1		1-06 *		T09					2				476
IN	H	C07P1		1-07 *		T09					1				476
IN	H	C07P2		1-08 *		T09									476
IN				1									25-4/8		476
IN	L	C08F2		1-01 *		T19S					2				477
IN	L	C09B1		1-02 *		T09					1				477
IN	L	C08D2		1-03 *		T09					2				477
IN	L	C08K2		1-04 *		T09					1				477
IN	L	C08U2		1-05 *		T09					2				477
IN	L	C09V2		1-06 *		T02									477
IN				1									15-6/8		477
INC BA=WC	H	A07A1		1-01 *		T21					1				478
INC BA=WC	H	A07C1		1-02 *		T22					2				478
INC BA=WC	H	C08P1		1-03 *		T08S									478
INC BA=WC				1									11-4/8		478
INT ENB(0)	H	A08H1		1-01 *		T11S					1				479
INT ENB(0)	H	B24J2		1-02 *		T24									479
INT ENB(0)				1									13-0/8		479
INT ENB(1)	H	A12S2		1-01 *		T11S					1				480
INT ENB(1)	H	A06F1		1-02 *		T11					2				480
INT ENB(1)	H	B08A1	B05H2	1-03 *		T18					1				480
INT ENB(1)	H	B05H2		1-04 *											480
INT ENB(1)				1									14-6/8		480
INTR DONE A	H	B05L2	B05S1	1-01 *		T19S					1				481
INTR DONE A	H	B05S1		1-02 *											481
INTR DONE A				1									3-2/8		481

RUN NAME	A/P	PIN NAME	ORDER PIN	BAY - ORDER	Q	DRAW	RV	PG	Y	X	Z	REMARKS	LENGTH	EXCEPTIONS	RUN NUMBER
LPB ONE	L	D15P2		1-01 *		T07S					1				482
LPB ONE	L	D17R1		1-02 *		T03									482
LPB ONE				1									3-2/8		482
LPB TO DAT	H	A17A1		1-01 *		T16					1				483
LPB TO DAT	H	A15A1		1-02 *		T14					2				483
LPB TO DAT	H	A15K2		1-03 *		T16					1				483
LPB TO DAT	H	A15M1		1-04 *		T15					2				483
LPB TO DAT	H	B15A1		1-05 *		T15					1				483
LPB TO DAT	H	B17A1		1-06 *		T14					2				483
LPB TO DAT	H	C11P1		1-07 *		T05S									483
LPB TO DAT				1									24-0/8		483
LPB TP	H	D12S1		1-01 *		T04S					1				484
LPB TP	H	D14B1		1-02 *		T07									484
LPB TP				1									4-4/8		484
LPB0(0)	H	C15R2				T06S								1=PIN RUN	485
LPB0(1)	H	A17B1		1-01 *		T16					1				486
LPB0(1)	H	C15P2		1-02 *		T06S					2				486
LPB0(1)	H	D15N2		1-03 *		T07									486
LPB0(1)				1									14-2/8		486
LPB1(0)	H	C15V1				T06S								1=PIN RUN	487
LPB1(1)	H	B15B1		1-01 *		T15					1				488
LPB1(1)	H	C15V2		1-02 *		T06S					2				488
LPB1(1)	H	D15M2		1-03 *		T07									488
LPB1(1)				1									11-2/8		488
LPB2(0)		C15U1				T06S								1=PIN RUN	489
LPB2(1)	H	B17B1		1-01 *		T14					1				490
LPB2(1)	H	C15S1		1-02 *		T06S					2				490
LPB2(1)	H	D15L2		1-03 *		T07									490
LPB2(1)				1									11-6/8		490
LPB3(0)	H	C15M1				T06S								1=PIN RUN	491
LPB3(1)	H	A15L2		1-01 *		T16					1				492
LPB3(1)	H	C15L1		1-02 *		T06S					2				492
LPB3(1)	H	D15K2		1-03 *		T07									492
LPB3(1)				1									12-6/8		492
LPB4(0)	H	C15J2				T06S								1=PIN RUN	493

TC11,F
RUN NAME

HND288,V16(16) 03/31/72
A/P PIN NAME | ORDER PIN | BAY-ORDER | Q | DRAW RV PG Y X Z | REMARKS | 24-MAY-72 LENGTH | 21112 EXCEPTIONS | PAGE 59 RUN NUMBER

A/P	PIN NAME	ORDER PIN	BAY-ORDER	Q	DRAW RV PG Y X Z	REMARKS	LENGTH	EXCEPTIONS	RUN NUMBER
	LPB4(1)	H A15N1	1-01 *		T15				494
	LPB4(1)	H C15H2	1-02 *		T06S				494
	LPB4(1)	H D15K1	1-03 *		T07		12=4/8		494
	LPB4(1)		1						494
	LPB5(0)	H C15F1			T06S		1=PIN RUN		495
	LPB5(1)	H A15B1	1-01 *		T14				496
	LPB5(1)	H C15E1	1-02 *		T06S				496
	LPB5(1)	H D15J1	1-03 *		T07		13=4/8		496
	LPB5(1)		1						496
	MAINT(0)	H A18S1	1-01 *		T12				497
	MAINT(0)	H A11R2	1-02 *		T11S				497
	MAINT(0)	H B12H1	1-03 *		T09				497
	MAINT(0)	H C16S2	1-04 *		T07				497
	MAINT(0)	H D14L1	1-05 *		T03				497
	MAINT(0)	H D08P2	1-06 *		T04				497
	MAINT(0)	H C07T2	1-07 *		T09				497
	MAINT(0)		1				32=0/8		497
	MAINT(1)	H A08E1	1-01 *		T17				498
	MAINT(1)	H A11P2	1-02 *		T11S				498
	MAINT(1)	H B14B1	1-03 *		T10				498
	MAINT(1)	H B14J2	1-04 *		T09				498
	MAINT(1)	H C09F1	1-05 *		T09				498
	MAINT(1)	H C07H1	1-06 *		T09				498
	MAINT(1)	H C10U2	1-07 *		T07				498
	MAINT(1)		1				28=2/8		498
	MASTER A	L B09S2	1-01 *		T19				499
	MASTER A	L B09R2	1-02 *		T19				499
	MASTER A	L B09P2	1-03 *		T19				499
	MASTER A		1				5=0/8		499
R1	MASTER B	H C06K1	1-01 *						500
R1	MASTER B	H C21H1	1-02 *						500
1	MASTER B	H D22P2	1-03 *						500
	MASTER B		1				16=2/8		500
1	MASTER B	L B06H2	1-01 *		T08				501
2	MASTER B	L B06H1	B05N1 1-02 *		T08				501
1	MASTER B	L B05N1	1-03 *						501
	MASTER B	L C06J1	1-04 *		T19				501
	MASTER B		1				10=2/8		501

TC11,F
RUN NAME

HND288,V16(16) 03/31/72
A/P PIN NAME | ORDER PIN | BAY-ORDER | Q | DRAW RV PG Y X Z | REMARKS | 24-MAY-72 LENGTH | 21112 EXCEPTIONS | PAGE 60 RUN NUMBER

A/P	PIN NAME	ORDER PIN	BAY-ORDER	Q	DRAW RV PG Y X Z	REMARKS	LENGTH	EXCEPTIONS	RUN NUMBER
	MISS(0)	H D07H1			T03S				502
							1=PIN RUN		502
	MISS(1)	H D07C1	1-01 *		T03S				503
	MISS(1)	H D14D2	1-02 *		T03				503
	MISS(1)		1				6=2/8		503
	MK BLK END	H D18U1			T07S		1=PIN RUN		504
	MK BLK END	L C24P1	1-01 *		T02				505
	MK BLK END	L D17C1	1-02 *		T03				505
	MK BLK END	L D18V1	1-03 *		T07S				505
	MK BLK END		1				10=4/8		505
	MK BLK MK	H C09P1	1-01 *		T02				506
	MK BLK MK	H C18E2	1-02 *		T07S				506
	MK BLK MK	H D17D2	1-03 *		T07				506
	MK BLK MK		1				12=6/8		506
	MK BLK MK	L C18D2			T07S		1=PIN RUN		507
	MK BLK START	H C09K1	1-01 *		T02				508
	MK BLK START	H C18J2	1-02 *		T07S				508
	MK BLK START	H D21D1	1-03 *		T02				508
	MK BLK START		1				12=4/8		508
	MK BLK START	L C18F1	1-01 *		T07S				509
	MK BLK START	L D17A1	1-02 *		T03				509
	MK BLK START		1				4=6/8		509
	MK BLK SYNC	H D18S2			T07S		1=PIN RUN		510
	MK BLK SYNC	L D18T2			T07S		1=PIN RUN		511
	MK DATA	H D18P2			T07S		1=PIN RUN		512
	MK DATA	L C18U2	1-01 *		T07S				513
	MK DATA	L D17B1	1-02 *		T03				513
	MK DATA		1				3=4/8		513
	MK DATA SYNC	H C17B1	1-01 *		T02				514
	MK DATA SYNC	H C18H1	1-02 *		T07S				514
	MK DATA SYNC		1				3=2/8		514
	MK DATA SYNC	L C18J1			T07S		1=PIN RUN		515

RUN NAME	A/P	PIN NAME	ORDER PIN	BAY - ORDER	Q	DRAW RV PG Y	X	Z	REMARKS	LENGTH	EXCEPTIONS	RUN NUMBER
MK END	H	C18F2		1-01 *		T07S		1				516
MK END	H	D08P2		1-02 *		T03						516
MK END				1						10-0/8		516
MK END	L	C18H2		1-01 *		T07S		1				517
MK END	L	D17D1		1-02 *		T03						517
MK END				1						5-0/8		517
MMT(0)	H	A11F1		1-01 *		T10S		1				518
MMT(0)	H	C16T2		1-02 *		T07						518
MMT(0)				1						10-0/8		518
MMT(1)	H	A11E1		1-01 *		T10S		1				519
MMT(1)	H	B09D2		1-02 *		T18						519
MMT(1)				1						5-2/8		519
MTE(0)	H	B24H2		1-01 *		T24		2				520
MTE(0)	H	A14J2		1-02 *		T03S		1				520
MTE(0)	H	D15N1		1-03 *		T03		2				520
MTE(0)	H	D17N2		1-04 *		T04						520
MTE(0)				1						22-6/8		520
MTE(1)	H	A09D2		1-01 *		T17		2				521
MTE(1)	H	A14K2		1-02 *		T03S		1				521
MTE(1)	H	D13R1		1-03 *		T03						521
MTE(1)				1						16-2/8		521
NEW UNIT SELECT	H	B11S2				T04S					1-PIN RUN	522
NEW UNIT SELECT	L	A15T2		1-01 *		T12		2				523
NEW UNIT SELECT	L	B11R2		1-02 *		T04S		1				523
NEW UNIT SELECT	L	D11U1		1-03 *		T04		2				523
NEW UNIT SELECT	L	D09U1		1-04 *		T04		1				523
NEW UNIT SELECT	L	D05L2		1-05 *		T04						523
NEW UNIT SELECT				1						24-0/8		523
NEX(0)	H	B06K1		1-01 *		T08S		1				524
NEX(0)	H	D15U2		1-02 *		T03						524
NEX(0)				1						10-4/8		524
NEX(1)	H	A09P1		1-01 *		T17		1				525
NEX(1)	H	B06L1		1-02 *		T08S						525
NEX(1)				1						5-2/8		525

RUN NAME	A/P	PIN NAME	ORDER PIN	BAY - ORDER	Q	DRAW RV PG Y	X	Z	REMARKS	LENGTH	EXCEPTIONS	RUN NUMBER
NO CHANGE	L	C21R1		1-01 *				2				526
NO CHANGE	L	D20R2		1-02 *		T04		1				526
NO CHANGE	L	D20R1		1-03 *		T04		2				526
NO CHANGE	L	D13V2		1-04 *		T04S						526
NO CHANGE				1						13-4/8		526
NPR DATA CLEAR	H	B06R2				T08S					1-PIN RUN	527
NPR DATA CLEAR	L	B06S1		1-01 *		T08		1				528
NPR DATA CLEAR	L	B06S2		1-02 *		T08S		2				528
NPR DATA CLEAR	L	D17F1		1-03 *		T09		1				528
NPR DATA CLEAR	L	D17T2		1-04 *		T09						528
NPR DATA CLEAR				1						15-6/8		528
NPR DATA STROBE	H	B06M2				T08S					1-PIN RUN	529
NPR DATA STROBE	L	B06L2		1-01 *		T08		1				530
NPR DATA STROBE	L	B06T2		1-02 *		T08S		2				530
NPR DATA STROBE	L	C10P1		1-03 *		T09		1				530
NPR DATA STROBE	L	C10R1		1-04 *		T09						530
NPR DATA STROBE				1						10-6/8		530
NPR DATA TO BUS	H	B06E2				T08S					1-PIN RUN	531
NPR DATA TO BUS	L	B06F2		1-01 *		T08S		1				532
NPR DATA TO BUS	L	C07D2		1-02 *		T09						532
NPR DATA TO BUS				1						4-6/8		532
OBUS D00	L	A04B1		1-01 *		T13		1				533
OBUS D00	L	A07E1		1-02 *		T21S/T22S		2				533
OBUS D00	L	B09S1		1-03 *		T18S		1				533
OBUS D00	L	B08U2		1-04 *		T18S						533
OBUS D00				1						13-4/8		533
OBUS D01	L	A04L2		1-01 *		T13		2				534
OBUS D01	L	A07J1		1-02 *		T21S/T22S		1				534
OBUS D01	L	B08S2		1-03 *		T18S		2				534
OBUS D01	L	B09N2		1-04 *		T18S						534
OBUS D01				1						13-2/8		534
OBUS D02	L	A04E1		1-01 *		T13		1				535
OBUS D02	L	A07L2		1-02 *		T21S/T22S		2				535
OBUS D02	L	B08P2		1-03 *		T18S		1				535
OBUS D02	L	B09N1		1-04 *		T18S						535
OBUS D02				1						13-0/8		535

HND288.V19(116) 03/31/72
A/P PIN NAME — ORDER PIN — BAY-ORDER — Q — DRAW RV PG

RUN NAME	A/P	PIN NAME	ORDER PIN	BAY-ORDER	Q	DRAW RV PG	Y	X	M	REMARKS	LENGTH	RUN NUMBER
OBUS D03	L	A04D2	1-01	T13	*							536
OBUS D03	L	A07H2	1-02	T21S/T22S	*							536
OBUS D03	L	B08M2	1-03	T18S	*							536
OBUS D03	L	B09K2	1-04	T18S	*							536
			1								12=6/8	
OBUS D04	L	A04F2	1-01	T13	*							537
OBUS D04	L	B08K2	1-02	T18S	*							537
OBUS D04	L	B09K1	1-03	T18S	*							537
OBUS D04	L	B07R2	1-04	T21S/T22S	*							537
			1								12=0/8	
OBUS D05	L	A04J2	1-01	T13	*							538
OBUS D05	L	A07R1	1-02	T21S/T22S	*							538
OBUS D05	L	B08H2	1-03	T18S	*							538
OBUS D05	L	B09F2	1-04	T18S	*							538
			1								11=4/8	
OBUS D06	L	A04H1	1-01	T13	*							539
OBUS D06	L	A07S2	1-02	T21S/T22S	*							539
OBUS D06	L	B08E2	1-03	T18S	*							539
OBUS D06	L	B09F1	1-04	T18S	*							539
			1								11=2/8	
OBUS D07	L	A04K1	1-01	T13	*							540
OBUS D07	L	A07P1	1-02	T21S/T22S	*							540
OBUS D07	L	B08C1	1-03	T18S	*							540
OBUS D07	L	B09C1	1-04	T18S	*							540
			1								10=6/8	
OBUS D08	L	A04M1	1-01	T13	*							541
OBUS D08	L	A09S1	1-02	T17S	*							541
OBUS D08	L	A08U2	1-03	T17S	*							541
OBUS D08	L	B07N2	1-04	T21S/T22S	*							541
			1								12=4/8	
OBUS D09	L	A04N2	1-01	T13	*							542
OBUS D09	L	A09N2	1-02	T17S	*							542
OBUS D09	L	A08S2	1-03	T17S	*							542
OBUS D09	L	B07C1	1-04	T21S/T22S	*							542
			1								12=0/8	
OBUS D10	L	A04R2	1-01	T13	*							543
OBUS D10	L	A09N1	1-02	T17S	*							543
OBUS D10	L	A08P2	1-03	T17S	*							543
OBUS D10	L	B07D2	1-04	T21S/T22S	*							543
			1								11=6/8	

HND288.V16(116) 03/31/72
A/P PIN NAME — ORDER PIN — BAY-ORDER — Q — DRAW RV PG

RUN NAME	A/P	PIN NAME	ORDER PIN	BAY-ORDER	Q	DRAW RV PG	Y	X	M	REMARKS	LENGTH	RUN NUMBER
OBUS D11	L	A04U1	1-01	T13	*							544
OBUS D11	L	B07A1	1-02	T21S/T22S	*							544
OBUS D11	L	A08M2	1-03	T17S	*							544
OBUS D11	L	A09K2	1-04	T17S	*							544
			1								11=4/8	
OBUS D12	L	A09K1	1-01	T17S	*							545
OBUS D12	L	A08K2	1-02	T17S	*							545
OBUS D12	L	A04T2	1-03	T13	*							545
OBUS D12	L	B07M2	1-04	T21S/T22S	*							545
			1								12=0/8	
OBUS D13	L	A09F2	1-01	T17S	*							546
OBUS D13	L	A08H2	1-02	T17S	*							546
OBUS D13	L	A04V2	1-03	T13	*							546
OBUS D13	L	B07H2	1-04	T21S/T22S	*							546
			1								12=0/8	
OBUS D14	L	A09F1	1-01	T17S	*							547
OBUS D14	L	A08E2	1-02	T17S	*							547
OBUS D14	L	A04S1	1-03	T13	*							547
OBUS D14	L	B07M1	1-04	T21S/T22S	*							547
			1								13=2/8	
OBUS D15	L	A09C1	1-01	T17S	*							548
OBUS D15	L	A08C1	1-02	T17S	*							548
OBUS D15	L	B07J1	1-03	T21S/T22S	*							548
OBUS D15	L	A04P1	1-04	T13	*							548
			1								14=0/8	

RUN NAME	A/P	PIN NAME	ORDER PIN	BAY - ORDER	Q	DRAW RV PG Y	X	Z	REMARKS	LENGTH	EXCEPTIONS	RUN NUMBER
OBVERSE ENB	H	A15D2		1-01 *		T15		1				549
OBVERSE ENB	H	A15F1		1-02 *		T14		2				549
OBVERSE ENB	H	A15R2		1-03 *		T16		1				549
OBVERSE ENB	H	A17M1		1-04 *		T16		2				549
OBVERSE ENB	H	A17F1		1-05 *		T16		1				549
OBVERSE ENB	H	A17D2		1-06 *		T16		2				549
OBVERSE ENB	H	A17K2		1-07 *		T16		1				549
OBVERSE ENB	H	A17R2		1-08 *		T16		2				549
OBVERSE ENB	H	B17D2		1-09 *		T14		1				549
OBVERSE ENB	H	B17F1		1-10 *		T14		2				549
OBVERSE ENB	H	B15D2		1-11 *		T15		1				549
OBVERSE ENB	H	B15F1		1-12 *		T15		2				549
OBVERSE ENB	H	B15K2		1-13 *		T15		1				549
OBVERSE ENB	H	B15M1		1-14 *		T15		2				549
OBVERSE ENB	H	B15R2		1-15 *		T15		1				549
OBVERSE ENB	H	B17M1		1-16 *		T14		2				549
OBVERSE ENB	H	B17K2		1-17 *		T14		1				549
OBVERSE ENB	H	B17R2		1-18 *		T14		2				549
OBVERSE ENB	H	C21C1		1-19 *		T08		1				549
OBVERSE ENB	H	C21E1		1-20 *		T08		2				549
OBVERSE ENB	H	C11J2		1-21 *		T08S						549
OBVERSE ENB				1								549
										65-4/8		549
OUT HIGH	H	B04M2		1-01 *		T19S		2				550
OUT HIGH	H	C08A1		1-02 *		T09		1				550
OUT HIGH	H	D19U2		1-03 *		T04						550
OUT HIGH				1								550
										13-2/8		550
OUT LOW	H	C08P2		1-01 *		T09		2				551
OUT LOW	H	C08K1		1-02 *		T09		1				551
OUT LOW	H	C08H1		1-03 *		T09		2				551
OUT LOW	H	B04N1		1-04 *		T19S		1				551
OUT LOW	H	B13L1		1-05 *		T04		2				551
OUT LOW	H	C21E2		1-06 *		T05						551
OUT LOW				1								551
										24-6/8		551
PAR(0)	H	B24M2		1-01 *		T24		1				552
PAR(0)	H	D15P1		1-02 *		T03		2				552
PAR(0)	H	D07J2		1-03 *		T03S						552
PAR(0)				1								552
										16-0/8		552
PAR(1)	H	A09D1		1-01 *		T17		1				553
PAR(1)	H	D07H2		1-02 *		T03S						553
PAR(1)				1								553
										11-0/8		553

RUN NAME	A/P	PIN NAME	ORDER PIN	BAY - ORDER	Q	DRAW RV PG Y	X	Z	REMARKS	LENGTH	EXCEPTIONS	RUN NUMBER
PTP0	H	D08H2		1-01 *		T04		1				554
PTP0	H	D12D1		1-02 *		T04		2				554
PTP0	H	D13F1		1-03 *		T04S		1				554
PTP0	H	D19J1		1-04 *		T04						554
PTP0				1								554
										13-0/8		554
PTP0	L	D11J2		1-01 *		T04		1				555
PTP0	L	D12E1		1-02 *		T04S						555
PTP0				1								555
										2-6/8		555
PTP1	H	D08J1		1-01 *		T04		1				556
PTP1	H	D13C1		1-02 *		T04S						556
PTP1				1								556
										5-0/8		556
PWALL	H	D06D1		1-01 *		T03		2				557
PWALL	H	C12L2		1-02 *		T05S		1				557
PWALL	H	D21L2		1-03 *		T05						557
PWALL				1								557
										14-4/8		557
RALL	H	C09J2		1-01 *		T02		2				558
RALL	H	C12N2		1-02 *		T05S		1				558
RALL	H	D21R2		1-03 *		T02						558
RALL				1								558
										12-0/8		558
RALL	L	C19V2		1-01 *		T05		2				559
RALL	L	C20H2		1-02 *		T02		1				559
RALL	L	C17M2		1-03 *		T07		2				559
RALL	L	C12N1		1-04 *		T05S		1				559
RALL	L	D06J1		1-05 *		T03						559
RALL				1								559
										19-2/8		559
RDATA	H	C19R1		1-01 *		T05		1				560
RDATA	H	D17N1		1-02 *		T03		2				560
RDATA	H	D14E1		1-03 *		T07		1				560
RDATA	H	C12J2		1-04 *		T05S						560
RDATA				1								560
										14-4/8		560
RDATA	L	C19U2		1-01 *		T05		1				561
RDATA	L	C12J1		1-02 *		T05S		2				561
RDATA	L	D06P1		1-03 *		T02						561
RDATA				1								561
										13-4/8		561
READ D0	H	B23U2				T12S						
											1=PIN RUN	562
READ D0	L	B23V2		1-01 *		T12S		1				563
READ D0	L	C16C1		1-02 *		T06						563
READ D0				1								563
										6-4/8		563

RUN NAME	A/P	PIN NAME	ORDER PIN	BAY - ORDER	Q	DRAW RV PG Y	X	Z	REMARKS	LENGTH	EXCEPTIONS	RUN NUMBER
READ D1	H	B21U2				T12S					1-PIN RUN	564
READ D1	L	B21V2		1-01 *		T12S		1				565
READ D1	L	C16J1		1-02 *		T06						565
READ D1				1						5-6/8		565
READ D2	H	B20U2				T12S					1-PIN RUN	566
READ D2	L	B20V2		1-01 *		T12S		1				567
READ D2	L	C16P1		1-02 *		T06						567
READ D2				1						5-4/8		567
READ MK	H	A23U2				T12S					1-PIN RUN	568
READ MK	L	A23V2		1-01 *		T12S		1				569
READ MK	L	C16R2		1-02 *		T07						569
READ MK				1						8-4/8		569
READ TM	H	A21U2				T12S					1-PIN RUN	570
READ TM	L	A21V2		1-01 *		T12S		1				571
READ TM	L	D00D1		1-02 *		T04						571
READ TM				1						11-6/8		571
READY ENB(0)	H	D19R2				T02S					1-PIN RUN	572
READY ENB(1)	H	C09K2		1-01 *		T02		1				573
READY ENB(1)	H	C21L1		1-02 *		T02		2				573
READY ENB(1)	H	D22M1		1-03 *		T02		1				573
READY ENB(1)	H	D20L1		1-04 *		T03		2				573
READY ENB(1)	H	D19S2		1-05 *		T02S						573
READY ENB(1)				1						20-2/8		573
READY(0)	H	C08P1		1-01 *		T08		1				574
READY(0)	H	C09M1		1-02 *		T02		2				574
READY(0)	H	B12M2		1-03 *		T19		1				574
READY(0)	H	B24E2		1-04 *		T24		2				574
READY(0)	H	C23K1		1-05 *		T02		1				574
READY(0)	H	C20L2		1-06 *		T05		2				574
READY(0)	H	D19F1		1-07 *		T02S		1				574
READY(0)	H	D23L1		1-08 *		T03						574
READY(0)				1						36-0/8		574

RUN NAME	A/P	PIN NAME	ORDER PIN	BAY - ORDER	Q	DRAW RV PG Y	X	Z	REMARKS	LENGTH	EXCEPTIONS	RUN NUMBER
READY(1)	H	B08B1		1-01 *		T18		2				575
READY(1)	H	D06J2		1-02 *		T03		1				575
READY(1)	H	D19E1		1-03 *		T02S		2				575
READY(1)	H	D22E1		1-04 *		T02						575
READY(1)				1						21-2/8		575
REED	H	C07J1		1-01 *		T09		2				576
REED	H	C09H1		1-02 *		T09		1				576
REED	H	C16D2		1-03 *		T05		2				576
REED	H	C16K2		1-04 *		T05		1				576
REED	H	C19V1		1-05 *		T05S						576
REED				1						17-0/8		576
REG SELECT	H	C06H1		1-01 *		T19		2				577
REG SELECT	H	D10M2		1-02 *		T10		1				577
REG SELECT	H	D10N2		1-03 *		T10		2				577
REG SELECT	H	D10P2		1-04 *		T10						577
REG SELECT				1						11-4/8		577
REG SELECT	L	A10H2		1-01 *		T10		1				578
REG SELECT	L	A10J2		1-02 *		T10		2				578
REG SELECT	L	A10K2		1-03 *		T10		1				578
REG SELECT	L	B04L2		1-04 *		T19S		2				578
REG SELECT	L	C08F1		1-05 *		T19						578
REG SELECT				1						16-2/8		578
REQUEST BUS(0)	H	B11N1		1-01 *		T08S		1				579
REQUEST BUS(0)	H	D00M1		1-02 *		T03						579
REQUEST BUS(0)				1						8-4/8		579
REQUEST BUS(1)	H	B09V1	B05U1	1-01 *				1				580
REQUEST BUS(1)	H	B05U1		1-02 *				2				580
REQUEST BUS(1)	H	B11M1		1-03 *		T08S		1				580
REQUEST BUS(1)	H	C10D2		1-04 *		T08		2				580
REQUEST BUS(1)	H	C10H2		1-05 *		T08						580
REQUEST BUS(1)				1						15-0/8		580
RESET ERRORS	L	A14H2		1-01 *		T03		1				581
RESET ERRORS	L	B11A1		1-02 *		T03		2				581
RESET ERRORS	L	B05D2		1-03 *		T08		1				581
RESET ERRORS	L	D07E2		1-04 *		T03		2				581
RESET ERRORS	L	D07K2		1-05 *		T03		1				581
RESET ERRORS	L	D07N2		1-06 *		T03		2				581
RESET ERRORS	L	D13K2		1-07 *		T03S						581
RESET ERRORS				1						28-6/8		581

REV(0)	H	A11U1		1-01 *		T11S			2				
REV(0)	H	D04C1		1-02 *		T04			1				582
REV(0)	H	D20P1	C21P1	1-03 *		T04			2				582
REV(0)	H	C21P1		1-04 *									582
REV(0)				1									582
											26-2/8		582
REV(1)	H	A08M1		1-01 *		T17			1				
REV(1)	H	A11S1		1-02 *		T11S			2				583
REV(1)	H	C10E2		1-03 *		T08			1				583
REV(1)	H	C10F2		1-04 *		T08			2				583
REV(1)	H	D04F1		1-05 *		T04			1				583
REV(1)	H	D20P2		1-06 *		T04							583
REV(1)				1									583
											30-4/8		583
REVERSE	L	A19P2		1-01 *		T12			1				
REVERSE	L	D20S2		1-02 *		T04S							584
REVERSE				1									584
											10-6/8		584
RNUM	H	C09S1		1-01 *		T02			1				
RNUM	H	C12E2	D14K2	1-02 *		T05S			2				585
RNUM	H	D14K2		1-03 *		T07							585
RNUM				1									585
											10-6/8		585
RNUM	L	C12E1		1-01 *		T05S			1				
RNUM	L	C19T2		1-02 *		T05							586
RNUM				1									586
											6-6/8		586
RWALL	H	A06R1		1-01 *		T02			2				
RWALL	H	D09H2		1-02 *		T03			1				587
RWALL	H	D06K1		1-03 *		T03S			2				587
RWALL	H	D20M1		1-04 *		T03							587
RWALL				1									587
											21-6/8		587
RWB SH	H	C13D1		1-01 *		T06			1				
RWB SH	H	C13K1		1-02 *		T06			2				588
RWB SH	H	C13R1		1-03 *		T06			1				588
RWB SH	H	D22C1		1-04 *		T05S							588
RWB SH				1									588
											13-2/8		588
RWB0(0)	H	C15M2		1-01 *		T06			1				
RWB0(0)	H	C15N2		1-02 *		T06			2				589
RWB0(0)	H	C14V1		1-03 *		T06S			1				589
RWB0(0)	H	C13P1		1-04 *		T06							589
RWB0(0)				1									589
											9-2/8		589

RWB0(1)	H	A17U2		1-01 *		T16			1				
RWB0(1)	H	C14V2		1-02 *		T06S							590
RWB0(1)				1									590
											8-2/8		590
RWB1(0)	H	C15T2		1-01 *		T06			1				
RWB1(0)	H	C15U2		1-02 *		T06			2				591
RWB1(0)	H	C14U1		1-03 *		T06S			1				591
RWB1(0)	H	C13J1		1-04 *		T06							591
RWB1(0)				1									591
											9-2/8		591
RWB1(1)	H	B15U2		1-01 *		T15			1				
RWB1(1)	H	C14S1		1-02 *		T06S							592
RWB1(1)				1									592
											5-0/8		592
RWB2(0)	H	C15R1		1-01 *		T06			2				
RWB2(0)	H	C14R2		1-02 *		T06S			1				593
RWB2(0)	H	C15P1		1-03 *		T06			2				593
RWB2(0)	H	C13C1		1-04 *		T06							593
RWB2(0)				1									593
											9-0/8		593
RWB2(1)	H	B17U2		1-01 *		T14			1				
RWB2(1)	H	C14P2		1-02 *		T06S							594
RWB2(1)				1									594
											5-0/8		594
RWB3(0)	H	A23P2		1-01 *		T12			1				
RWB3(0)	H	B20P2		1-02 *		T12			2				595
RWB3(0)	H	C19J1		1-03 *		T06			1				595
RWB3(0)	H	C19K1		1-04 *		T06			2				595
RWB3(0)	H	C14M1		1-05 *		T06S							595
RWB3(0)				1									595
											17-0/8		595
RWB3(1)	H	A17N2		1-01 *		T16			1				
RWB3(1)	H	A23N2		1-02 *		T12			2				596
RWB3(1)	H	B20N2		1-03 *		T12			1				596
RWB3(1)	H	C14L1		1-04 *		T06S			2				596
RWB3(1)	H	C13M1		1-05 *		T06			1				596
RWB3(1)	H	B09L1		1-06 *		T18							596
RWB3(1)				1									596
											26-2/8		596
RWB4(0)	H	B21P2		1-01 *		T12			2				
RWB4(0)	H	C19F2		1-02 *		T06			1				597
RWB4(0)	H	C19E2		1-03 *		T06			2				597
RWB4(0)	H	C14J2		1-04 *		T06S							597
RWB4(0)				1									597
											11-4/8		597

RUN NAME	A/P	PIN NAME	ORDER PIN	BAY - ORDER	Q	DRAW	RV	PG	Y	X	Z	REMARKS	LENGTH	RUN NUMBER
RWB4(1)	H	B09H2		1-01 *		T18					1			598
RWB4(1)	H	C13F1		1-02 *		T06					2			598
RWB4(1)	H	C14H2		1-03 *		T06S					1			598
RWB4(1)	H	B15N2		1-04 *		T15					2			598
RWB4(1)	H	B21N2		1-05 *		T12								598
RWB4(1)				1									18-2/8	598
RWB5(0)	H	B23P2		1-01 *		T12					2			599
RWB5(0)	H	C15D1		1-02 *		T06					1			599
RWB5(0)	H	C15C1		1-03 *		T06					2			599
RWB5(0)	H	C14F1		1-04 *		T06S								599
RWB5(0)				1									12-4/8	599
RWB5(1)	H	B09H1		1-01 *		T18					1			600
RWB5(1)	H	C13A1		1-02 *		T06					2			600
RWB5(1)	H	C14E1		1-03 *		T06S					1			600
RWB5(1)	H	B17N2		1-04 *		T14					2			600
RWB5(1)	H	B23N2		1-05 *		T12								600
RWB5(1)				1									18-2/8	600
RWC1	H	C14B1		1-01 *		T06					2			601
RWC1	H	C14D2		1-02 *		T06					1			601
RWC1	H	C14H1		1-03 *		T06					2			601
RWC1	H	C11L2		1-04 *		T05S								601
RWC1				1									9-4/8	601
RWC2	H	C14L2		1-01 *		T06					2			602
RWC2	H	C14B2		1-02 *		T06					1			602
RWC2	H	C14N1		1-03 *		T06					2			602
RWC2	H	C11M1		1-04 *		T05S								602
RWC2				1									9-6/8	602
RWDAT	H	D14E2		1-01 *		T03					1			603
RWDAT	H	C09D2		1-02 *		T02					2			603
RWDAT	H	C07J2		1-03 *		T08					1			603
RWDAT	H	D06S1		1-04 *		T02S								603
RWDAT				1									16-0/8	603
SAT	H	C12D2		1-01 *		T05S					1			604
SAT	H	D20T2		1-02 *		T04								604
SAT				1									8-2/8	604
SAT	L	A18S2		1-01 *		T12					1			605
SAT	L	C12D1		1-02 *		T05S					2			605
SAT	L	D14K1		1-03 *		T03					1			605
SAT	L	D06L1		1-04 *		T04								605
SAT				1									18-6/8	605

RUN NAME	A/P	PIN NAME	ORDER PIN	BAY - ORDER	Q	DRAW	RV	PG	Y	X	Z	REMARKS	LENGTH	RUN NUMBER
SELE	H	A09H2		1-01 *		T17					1			606
SELE	H	D12P2		1-02 *		T03					2			606
SELE	H	D13S2		1-03 *		T03S								606
SELE				1									14-6/8	606
SELE	L	B24L2		1-01 *		T23					2			607
SELE	L	C20D1		1-02 *		T10					1			607
SELE	L	D17K2		1-03 *		T04					2			607
SELE	L	D15R2		1-04 *		T03					1			607
SELE	L	D12R2		1-05 *		T03S								607
SELE				1									18-6/8	607
SELECT 0	H	C06E1		1-01 *		T19S					1			608
SELECT 0	H	C07A1		1-02 *		T09					2			608
SELECT 0	H	C06M1		1-03 *		T09					1			608
SELECT 0	H	C08N2		1-04 *		T09								608
SELECT 0				1									9-4/8	608
SELECT 10	H	C09A1		1-01 *		T09					1			609
SELECT 10	H	C06J2		1-02 *		T19S					2			609
SELECT 10	H	C07R2		1-03 *		T09					1			609
SELECT 10	H	C08T2		1-04 *		T09					2			609
SELECT 10	H	C09T2		1-05 *		T02					1			609
SELECT 10	H	D21P2		1-06 *		T02								609
SELECT 10				1									22-0/8	609
SELECT 2	H	A08H1		1-01 *		T17					1			610
SELECT 2	H	B08H1		1-02 *		T18					2			610
SELECT 2	H	C08C1		1-03 *		T09					1			610
SELECT 2	H	C08E1		1-04 *		T09					2			610
SELECT 2	H	B04T2		1-05 *		T19S					1			610
SELECT 2	H	B13M1		1-06 *		T04					2			610
SELECT 2	H	C21F2		1-07 *		T05					1			610
SELECT 2	H	D14T2		1-08 *		T04								610
SELECT 2				1									38-2/8	610
SELECT 4	H	B04R2		1-01 *		T19S					1			611
SELECT 4	H	C07D1		1-02 *		T09					2			611
SELECT 4	H	C08F2		1-03 *		T09								611
SELECT 4				1									7-4/8	611
SELECT 6	H	B04S1		1-01 *		T19S					1			612
SELECT 6	H	C08J2		1-02 *		T09					2			612
SELECT 6	H	C07R1		1-03 *		T09								612
SELECT 6				1									9-0/8	612

RUN NAME	A/P	PIN NAME	ORDER PIN	BAY - ORDER	Q	DRAW	RV	PG	Y	X	Z	REMARKS	LENGTH	EXCEPTIONS	RUN NUMBER
SELECT ECHO		A20P1		1-01 *		T12S					1				613
SELECT ECHO		B18T2		1-02 *		T03									613
SELECT ECHO				1									5-6/8		613
SET REQ	L	B11L1		1-01 *		T08					1				614
SET REQ	L	D23N2		1-02 *		T05S									614
SET REQ				1									11-0/8		614
SH ST	H	C18M1		1-01 *		T07S					1				615
SH ST	H	D18C1		1-02 *		T07									615
SH ST				1									4-0/8		615
SLAVE CLEAR	H	A10F2		1-01 *		T10S					2				616
SLAVE CLEAR	H	A10M2		1-02 *		T10					1				616
SLAVE CLEAR	H	A10N2		1-03 *		T10					2				616
SLAVE CLEAR	H	A10P2		1-04 *		T10					1				616
SLAVE CLEAR	H	C09C1		1-05 *		T09					2				616
SLAVE CLEAR	H	C08R2		1-06 *		T09					1				616
SLAVE CLEAR	H	D14V2		1-07 *		T04					2				616
SLAVE CLEAR	H	D21M1		1-08 *		T05									616
SLAVE CLEAR				1									31-0/8		616
SLAVE STROBE	H	A10T2		1-01 *		T10S					2				617
SLAVE STROBE	H	B12D1		1-02 *		T10					1				617
SLAVE STROBE	H	C08B1		1-03 *		T09					2				617
SLAVE STROBE	H	C08E2		1-04 *		T09					1				617
SLAVE STROBE	H	C08F1		1-05 *		T09					2				617
SLAVE STROBE	H	C08L1		1-06 *		T09					1				617
SLAVE STROBE	H	C08L2		1-07 *		T09					2				617
SLAVE STROBE	H	C08V2		1-08 *		T09					1				617
SLAVE STROBE	H	D21R1		1-09 *		T05									617
SLAVE STROBE				1									32-6/8		617
SST	L	C12F1		1-01 *		T05S					1				618
SST	L	D08M1		1-02 *		T04S									618
SST				1									6-6/8		618
SSYN(0)	H	A11E2		1-01 *		T10					1				619
SSYN(0)	H	A11J2		1-02 *		T10S					2				619
SSYN(0)	H	B11P2		1-03 *		T04									619
SSYN(0)				1									8-4/8		619
SSYN(1)	H	A11H2		1-01 *		T10S					2				620
SSYN(1)	H	B08J2		1-02 *		T10					1				620
SSYN(1)	H	B08J1	D14J2	1-03 *		T10					2				620
SSYN(1)	H	D14J2		1-04 *		T07									620
SSYN(1)				1									17-2/8		620

RUN NAME	A/P	PIN NAME	ORDER PIN	BAY - ORDER	Q	DRAW	RV	PG	Y	X	Z	REMARKS	LENGTH	EXCEPTIONS	RUN NUMBER
ST BLK MK	H	C18R2		1-01 *		T07S					1				621
ST BLK MK	H	D16E2		1-02 *		T07									621
ST BLK MK				1									4-4/8		621
ST BLK MK	L	C21V2		1-01 *		T03					1				622
ST BLK MK	L	D16F2		1-02 *		T07S									622
ST BLK MK				1									5-4/8		622
ST CK	H	C23N1		1-01 *		T02					1				623
ST CK	H	D18R1		1-02 *		T07S					2				623
ST CK	H	D17P1		1-03 *		T03									623
ST CK				1									9-4/8		623
ST FINAL	H	C19E1		1-01 *		T05					2				624
ST FINAL	H	D18L2		1-02 *		T07S					1				624
ST FINAL	H	D15H2		1-03 *		T05					2				624
ST FINAL	H	D16C1		1-04 *		T07									624
ST FINAL				1									13-0/8		624
ST FINAL	L	D16D2		1-01 *		T07S					1				625
ST FINAL	L	D20A1		1-02 *		T05									625
ST FINAL				1									4-2/8		625
ST IDLE	H	C09E2		1-01 *		T02					1				626
ST IDLE	H	B13R2		1-02 *		T02					2				626
ST IDLE	H	C18N2		1-03 *		T07S					1				626
ST IDLE	H	D18D2		1-04 *		T07					2				626
ST IDLE	H	D16J1		1-05 *		T07					1				626
ST IDLE	H	D22E2		1-06 *		T07									626
ST IDLE				1									24-2/8		626
ST IDLE	L	C21U2		1-01 *		T03					1				627
ST IDLE	L	D16K1		1-02 *		T07S									627
ST IDLE				1									5-6/8		627
ST REV CK	H	C10B1		1-01 *		T07					1				628
ST REV CK	H	C19A1		1-02 *		T05					2				628
ST REV CK	H	C23H1		1-03 *		T02					1				628
ST REV CK	H	C17T2		1-04 *		T07					2				628
ST REV CK	H	D18S1		1-05 *		T07S					1				628
ST REV CK	H	D16F1		1-06 *		T07									628
ST REV CK				1									25-6/8		628
ST REV CK	L	D16H1		1-01 *		T07S					1				629
ST REV CK	L	D20D2		1-02 *		T05									629
ST REV CK				1									5-0/8		629

A/P	PIN NAME	ORDER PIN	BAY - ORDER	Q	DRAW RV PG Y	X	Z	REMARKS	LENGTH	EXCEPTIONS	RUN NUMBER
L	A19N1		1-01 *		T12		1				630
L	D12L2		1-02 *		T04S						630
			1						11-4/8		630
H	D08L2		1-01 *		T04		1				631
H	D08N1		1-02 *		T04S		2				631
H	D12N1		1-03 *		T04		1				631
H	D13U2		1-04 *		T04		2				631
H	D23H2		1-05 *		T02						631
			1						18-2/8		631
L	C23C1		1-01 *		T04		2				632
L	C21P2		1-02 *		T04		1				632
L	D12P1		1-03 *		T04S						632
			1						12-2/8		632
H	D19N2		1-01 *		T07S		1				633
H	D23D1		1-02 *		T02						633
			1						5-0/8		633
L	D10M2				T07S					1=PIN RUN	634
H	A11V1		1-01 *		T10S		1				635
H	A21P2		1-02 *		T12						635
			1						7-6/8		635
H	A11V2		1-01 *		T10S		1				636
H	A21N2		1-02 *		T12						636
			1						7-6/8		636
H	B05K2		1-01 *				1				637
H	B12N2		1-02 *		T19S						637
			1						6-2/8		637
L	A07D2		1-01 *		T21		1				638
L	C07S1		1-02 *		T09S						638
			1						9-2/8		638
L	A09U2		1-01 *		T17		1				639
L	B09U2		1-02 *		T18		2				639
L	C07C1		1-03 *		T09S						639
			1						9-0/8		639
L	B07T2		1-01 *		T22		1				640
L	C07F1		1-02 *		T09S						640
			1						3-6/8		640

A/P	PIN NAME	ORDER PIN	BAY - ORDER	Q	DRAW RV PG Y	X	Z	REMARKS	LENGTH	EXCEPTIONS	RUN NUMBER
H	A23R2		1-01 *		T12		2				641
H	A21R2		1-02 *		T12		1				641
H	B12F2		1-03 *		T10S						641
			1						10-6/8		641
L	B12D2		1-01 *		T10		1				642
L	B12E2		1-02 *		T10		2				642
L	B10S1		1-03 *		T10		1				642
L	B10U1		1-04 *		T10		2				642
L	C20E1		1-05 *		T10S						642
			1						17-0/8		642
H	D21C1		1-01 *		T02S		2				643
H	C22V1		1-02 *		T02		1				643
H	C22E1		1-03 *		T02		2				643
H	C22M1		1-04 *		T02		1				643
H	C10N2		1-05 *		T05		2				643
H	D10P2		1-06 *		T02						643
			1						20-6/8		643
H	D08S2		1-01 *		T04S		2				644
H	D08B1		1-02 *		T04		1				644
H	D12H2		1-03 *		T04						644
			1						8-6/8		644
L	C17H2		1-01 *		T04		2				645
L	D19H1		1-02 *		T04		1				645
L	D12J2		1-03 *		T04S		2				645
L	D08E1		1-04 *		T04						645
			1						16-0/8		645
H	B10K2		1-01 *		T04		1				646
H	B10L2		1-02 *		T04		2				646
H	C17A1		1-03 *		T02		1				646
H	D21E1		1-04 *		T02		2				646
H	D12K1		1-05 *		T04S		1				646
H	D08R2		1-06 *		T03						646
			1						27-2/8		646
L	D08K2		1-01 *		T04S		1				647
L	D12J1		1-02 *		T04		2				647
L	D13H1		1-03 *		T04		1				647
L	D13E2		1-04 *		T04		2				647
L	C10N1		1-05 *		T07		1				647
L	D21A1		1-06 *		T02		2				647
L	D21J2		1-07 *		T02						647
			1						23-0/8		647

RUN NAME	A/P	PIN NAME	ORDER PIN	BAY - ORDER	Q	DRAW RV PG Y	X	Z	REMARKS	LENGTH	EXCEPTIONS	RUN NUMBER
TP00	H	C20R2		1-01 *		T05		2				648
TP00	H	C20N2		1-02 *		T05		1				648
TP00	H	C18F2		1-03 *		T05		2				648
TP00	H	C10D1		1-04 *		T07		1				648
TP00	H	C08R1		1-05 *		T08		2				648
TP00	H	C09R1		1-06 *		T02		1				648
TP00	H	D12F1		1-07 *		T04		2				648
TP00	H	D13F2		1-08 *		T04S		1				648
TP00	H	D14F1		1-09 *		T07						648
TP00				1						30-0/8		648
TP00	L	D22D1		1-01 *		T02		1				649
TP00	L	D22H1		1-02 *		T02		2				649
TP00	L	D12H1		1-03 *		T04S						649
TP00				1						10-0/8		649
TP01	H	C19H1		1-01 *		T05		1				650
TP01	H	C19C1		1-02 *		T05		2				650
TP01	H	C16L2		1-03 *		T05		1				650
TP01	H	D12E2		1-04 *		T04		2				650
TP01	H	D13K1		1-05 *		T04S						650
TP01				1						15-0/8		650
TP01	L	D12F2				T04S					1-PIN RUN	651
TP1	H	C19E2		1-01 *		T05		1				652
TP1	H	D18F1		1-02 *		T07		2				652
TP1	H	D15D1		1-03 *		T05		1				652
TP1	H	D14D2		1-04 *		T04S						652
TP1				1						13-0/8		652
TP1	L	B10J2		1-01 *		T04		2				653
TP1	L	C04K2		1-02 *		T08		1				653
TP1	L	C04L2		1-03 *		T08		2				653
TP1	L	D08K1		1-04 *		T04S		1				653
TP1	L	D12C1		1-05 *		T04		2				653
TP1	L	D21B1		1-06 *		T02		1				653
TP1	L	D21H1		1-07 *		T02		2				653
TP1	L	D22L1		1-08 *		T02						653
TP1				1						32-6/8		653
UNIT SELECT 0	L	A19B1		1-01 *		T12S		1				654
UNIT SELECT 0	L	A20V2		1-02 *		T12						654
UNIT SELECT 0				1						4-6/8		654

RUN NAME	A/P	PIN NAME	ORDER PIN	BAY - ORDER	Q	DRAW RV PG Y	X	Z	REMARKS	LENGTH	EXCEPTIONS	RUN NUMBER
UNIT SELECT 1	L	A19E1		1-01 *		T12S		1				655
UNIT SELECT 1	L	A20E2		1-02 *		T12						655
UNIT SELECT 1				1						3-0/8		655
UNIT SELECT 2	L	A19H1		1-01 *		T12S		1				656
UNIT SELECT 2	L	A20H2		1-02 *		T12						656
UNIT SELECT 2				1						3-0/8		656
UNIT SELECT 3	L	A19F2		1-01 *		T12S		1				657
UNIT SELECT 3	L	A20K2		1-02 *		T12						657
UNIT SELECT 3				1						3-0/8		657
UNIT SELECT 4	L	A19K1		1-01 *		T12S		1				658
UNIT SELECT 4	L	A20M2		1-02 *		T12						658
UNIT SELECT 4				1						3-2/8		658
UNIT SELECT 5	L	A19J2		1-01 *		T12S		1				659
UNIT SELECT 5	L	A20P2		1-02 *		T12						659
UNIT SELECT 5				1						3-2/8		659
UNIT SELECT 6	L	A19M1		1-01 *		T12S		1				660
UNIT SELECT 6	L	A20S2		1-02 *		T12						660
UNIT SELECT 6				1						3-2/8		660
UNIT SELECT 7	L	A19L2		1-01 *		T12S		1				661
UNIT SELECT 7	L	A20T2		1-02 *		T12						661
UNIT SELECT 7				1						3-2/8		661
UNIT SELECT DELAY	H	D03K1		1-01 *		T04S		1				662
UNIT SELECT DELAY	H	D23F1		1-02 *		T02						662
UNIT SELECT DELAY				1						11-6/8		662
UNIT SELECT DELAY	L	D03E2		1-01 *		T04S		1				663
UNIT SELECT DELAY	L	D14M1		1-02 *		T03						663
UNIT SELECT DELAY				1						7-0/8		663
UNIT1(0)	H	D04H2		1-01 *		T11S		1				664
UNIT1(0)	H	D04J1		1-02 *		T04						664
UNIT1(0)				1						2-4/8		664
UNIT1(1)	H	A18V1		1-01 *		T12		2				665
UNIT1(1)	H	A12D2		1-02 *		T11S		1				665
UNIT1(1)	H	A08P1		1-03 *		T17		2				665
UNIT1(1)	H	D04E2		1-04 *		T11		1				665
UNIT1(1)	H	D04J2		1-05 *		T04						665
UNIT1(1)				1						23-6/8		665

UNIT2(1)	H	A18U2		1-01 *		T12			1					666
UNIT2(1)	H	A12V2		1-02 *		T11S			2					666
UNIT2(1)	H	A00R1		1-03 *		T17			1					666
UNIT2(1)	H	D04N1		1-04 *		T04			2					666
UNIT2(1)	H	D04U1		1-05 *		T04								666
UNIT2(1)				1								24-0/8		666
UNIT3(1)	H	A18V2		1-01 *		T12			2					667
UNIT3(1)	H	A12E2		1-02 *		T11S			1					667
UNIT3(1)	H	A00L1		1-03 *		T17			2					667
UNIT3(1)	H	D04R1		1-04 *		T04			1					667
UNIT3(1)	H	D04U2		1-05 *		T04								667
UNIT3(1)				1								25-4/8		667
UPS(0(1)	H	A08V1		1-01 *		T04			1					668
UPS(0(1)	H	A08V2		1-02 *		T04			2					668
UPS(0(1)	H	B13R1		1-03 *		T04			1					668
UPS(0(1)	H	B24S2		1-04 *		T24			2					668
UPS(0(1)	H	D22D2		1-05 *		T07			1					668
UPS(0(1)	H	D22R1		1-06 *		T07			2					668
UPS(0(1)	H	D19M1		1-07 *		T04S								668
UPS(0(1)				1								30-4/8		668
UPS(1(1)	H	B09A1		1-01 *		T18			2					669
UPS(1(1)	H	D08J2		1-02 *		T04			1					669
UPS(1(1)	H	D08H1		1-03 *		T04			2					669
UPS(1(1)	H	D19N1	C19K2	1-04 *		T04S			1					669
UPS(1(1)	H	C19K2		1-05 *		T07								669
UPS(1(1)				1								25-0/8		669
WALL	H	C09L1		1-01 *		T02			1					670
WALL	H	C21K1		1-02 *		T02			2					670
WALL	H	D19S1		1-03 *		T05S								670
WALL				1								15-2/8		670
WALL	L	C19N2		1-01 *		T05			2					671
WALL	L	D21N2		1-02 *		T05S			1					671
WALL	L	D21T2		1-03 *		T02			2					671
WALL	L	D10R1		1-04 *		T05			1					671
WALL	L	D09H1		1-05 *		T03								671
WALL				1								21-2/8		671
WALL EN	H	C24M2		1-01 *		T24S			1					672
WALL EN	H	D22V1		1-02 *		T24			2					672
WALL EN	H	D21M2		1-03 *		T05			1					672
WALL EN	H	D10K2		1-04 *		T05								672
WALL EN				1								15-0/8		672

WALL EN	L	D09E1		1-01 *		T03			1					673
WALL EN	L	D10L2		1-02 *		T05S								673
WALL EN				1								8-0/8		673
WCO(0)	H	C20M2		1-01 *		T05			1					674
WCO(0)	H	D07R1		1-02 *		T02S								674
WCO(0)				1								10-2/8		674
WCO(1)	H	C20T2		1-01 *		T05			1					675
WCO(1)	H	C09F2		1-02 *		T02			2					675
WCO(1)	H	D07V1		1-03 *		T02S								675
WCO(1)				1								15-6/8		675
WCOF	L	B07S2		1-01 *		T22S			1					676
WCOF	L	D07V2		1-02 *		T02								676
WCOF				1								8-0/8		676
WDATA	H	C12H2		1-01 *		T05S			1					677
WDATA	H	D14A1		1-02 *		T07			2					677
WDATA	H	D19F2		1-03 *		T05			1					677
WDATA	H	D20E1		1-04 *		T05			2					677
WDATA	H	C19D2		1-05 *		T05			1					677
WDATA	H	C23F1		1-06 *		T02			2					677
WDATA	H	C23M1		1-07 *		T02								677
WDATA				1								25-2/8		677
WDATA	L	C19R2		1-01 *		T05			2					678
WDATA	L	C12H1		1-02 *		T05S			1					678
WDATA	L	D09R1		1-03 *		T02								678
WDATA				1								13-6/8		678
WREN(0)	H	D19K2				T02S							1-PIN RUN	679
WREN(1)	H	B23R2		1-01 *		T12			1					680
WREN(1)	H	B20R2		1-02 *		T12			2					680
WREN(1)	H	B21R2		1-03 *		T12			1					680
WREN(1)	H	D22J1		1-04 *		T02			2					680
WREN(1)	H	D19J2		1-05 *		T02S								680
WREN(1)				1								17-0/8		680
WRITE	H	C21J2		1-01 *		T05			2					681
WRITE	H	C19S2		1-02 *		T05S			1					681
WRITE	H	C16M2		1-03 *		T05			2					681
WRITE	H	C18H2		1-04 *		T05			1					681
WRITE	H	D09B1		1-05 *		T03								681
WRITE				1								19-0/8		681

RUN NAME	A/P	PIN NAME	ORDER PIN	BAY - ORDER	Q	DRAW RV PG Y	X	Z	REMARKS	LENGTH	EXCEPTIONS	RUN NUMBER
WRITE ECHO		A20S1		1-01 *		T12S		1				682
WRITE ECHO		B19H2		1-02 *		T12						682
WRITE ECHO				1						4-2/8		682
WRITE OK	H	C23F2		1-01 *		T02		2				683
WRITE OK	H	C20A1		1-02 *		T10		1				683
WRITE OK	H	C06R2		1-03 *		T12S						683
WRITE OK				1						14-2/8		683
WRITE OK	L	B12S1		1-01 *		T12S		1				684
WRITE OK	L	C06P2		1-02 *		T12		2				684
WRITE OK	L	D06A1		1-03 *		T03						684
WRITE OK				1						9-6/8		684
WRTM	H	D06D2		1-01 *		T03		2				685
WRTM	H	C12M2		1-02 *		T05S		1				685
WRTM	H	D21D2		1-03 *		T02						685
WRTM				1						13-6/8		685
WRTM	L	B12A1		1-01 *		T10		1				686
WRTM	L	C12M1	C19L2	1-02 *		T05S		2				686
WRTM	L	C19L2		1-03 *				1				686
WRTM	L	C19P2		1-04 *		T05		2				686
WRTM	L	D21U2		1-05 *		T02		1				686
WRTM	L	D06R2		1-06 *		T04						686
WRTM				1						30-0/8		686
WRTM EN	H	C20C1		1-01 *		T10		2				687
WRTM EN	H	C24K2		1-02 *		T24S		1				687
WRTM EN	H	D22U1		1-03 *		T24		2				687
WRTM EN	H	D10N1		1-04 *		T05						687
WRTM EN				1						17-2/8		687
WRTM EN	L	D06E2		1-01 *		T03		1				688
WRTM EN	L	D10P1		1-02 *		T05S						688
WRTM EN				1						7-4/8		688
XBA16(1)	H	A12L1		1-01 *		T11S		1				689
XBA16(1)	H	B06D1		1-02 *		T18		2				689
XBA16(1)	H	B06R2		1-03 *		T11						689
XBA16(1)				1						9-0/8		689
XBA17(1)	H	A12N2		1-01 *		T11S		1				690
XBA17(1)	H	B06E1		1-02 *		T18		2				690
XBA17(1)	H	B06L2		1-03 *		T11						690
XBA17(1)				1						8-6/8		690

RUN NAME	A/P	PIN NAME	ORDER PIN	BAY - ORDER	Q	DRAW RV PG Y	X	Z	REMARKS	LENGTH	EXCEPTIONS	RUN NUMBER
XINIT	L	A06K2		1-01 *				2				691
XINIT	L	B12S2		1-02 *				1				691
XINIT	L	C21S1		1-03 *								691
XINIT				1						14-6/8		691
ZDAT	L	D17J1		1-01 *		T09		2				692
ZDAT	L	D17S2		1-02 *		T09		1				692
ZDAT	L	D20F1		1-03 *		T05S						692
ZDAT				1						7-4/8		692
ZLPB	L	D07A1		1-01 *		T03		2				693
ZLPB	L	B10E1		1-02 *		T07S		1				693
ZLPB	L	C15A1		1-03 *		T06		2				693
ZLPB	L	C19K2		1-04 *		T06		1				693
ZLPB	L	D19L2		1-05 *		T02						693
ZLPB				1						20-0/8		693

ERROR LISTING

HND288.V16(16) 03/31/72

24-MAY-72

WIRE WRAP RUN NAME	A/P	PIN NAME	ORDER PIN	BAY - ORDER	Q	DRAW	RV	PG	Y	X	Z	REMARKS	LENGTH	21112 EXCEPTIONS	RUN NUMBER
BD00	L	A00B1				T13S								1-PIN RUN	117
D13N1		D13N1												1-PIN RUN	339
DO STROBE	H	D14N2				T05S								1-PIN RUN	433
LPB0(0)	H	C15R2				T06S								1-PIN RUN	485
LPB1(0)	H	C15V1				T06S								1-PIN RUN	487
LPB2(0)		C17U1				T06S								1-PIN RUN	489
LPB3(0)	H	C17M1				T06S								1-PIN RUN	491
LPB4(0)	H	C15J2				T06S								1-PIN RUN	493
LPB5(0)	H	C15F1				T06S								1-PIN RUN	495
MISS(0)	H	D07H1				T03S								1-PIN RUN	502
MK BLK END	H	D16U1				T07S								1-PIN RUN	504
MK BLK MK	L	C18D2				T07S								1-PIN RUN	507
MK BLK SYNC	H	D18S2				T07S								1-PIN RUN	510
MK BLK SYNC	L	D18T2				T07S								1-PIN RUN	511
MK DATA	H	D18P2				T07S								1-PIN RUN	512
MK DATA SYNC	L	C18J1				T07S								1-PIN RUN	515
NEW UNIT SELECT	H	B11S2				T04S								1-PIN RUN	522
NPR DATA CLEAR	H	B08R2				T08S								1-PIN RUN	527
NPR DATA STROBE	H	B08M2				T08S								1-PIN RUN	529
NPR DATA TO BUS	H	B08E2				T08S								1-PIN RUN	531
READ D0	H	B23U2				T12S								1-PIN RUN	562
READ D1	H	B21U2				T12S								1-PIN RUN	564
READ D2	H	B20U2				T12S								1-PIN RUN	566
READ MK	H	A23U2				T12S								1-PIN RUN	568
READ TM	H	A21U2				T12S								1-PIN RUN	570
READY ENB(0)	H	D19R2				T02S								1-PIN RUN	572
SYNC	L	D18M2				T07S								1-PIN RUN	634
TP01	L	D12F2				T04S								1-PIN RUN	651
WREN(0)	H	D19K2				T02S								1-PIN RUN	679

THIS SCHEMATIC IS FURNISHED ONLY FOR TEST AND MAINTENANCE PURPOSES. THE CIRCUITS ARE PROPRIETARY IN NATURE AND SHOULD BE TREATED ACCORDINGLY.
COPYRIGHT 1969 BY DIGITAL EQUIPMENT CORPORATION

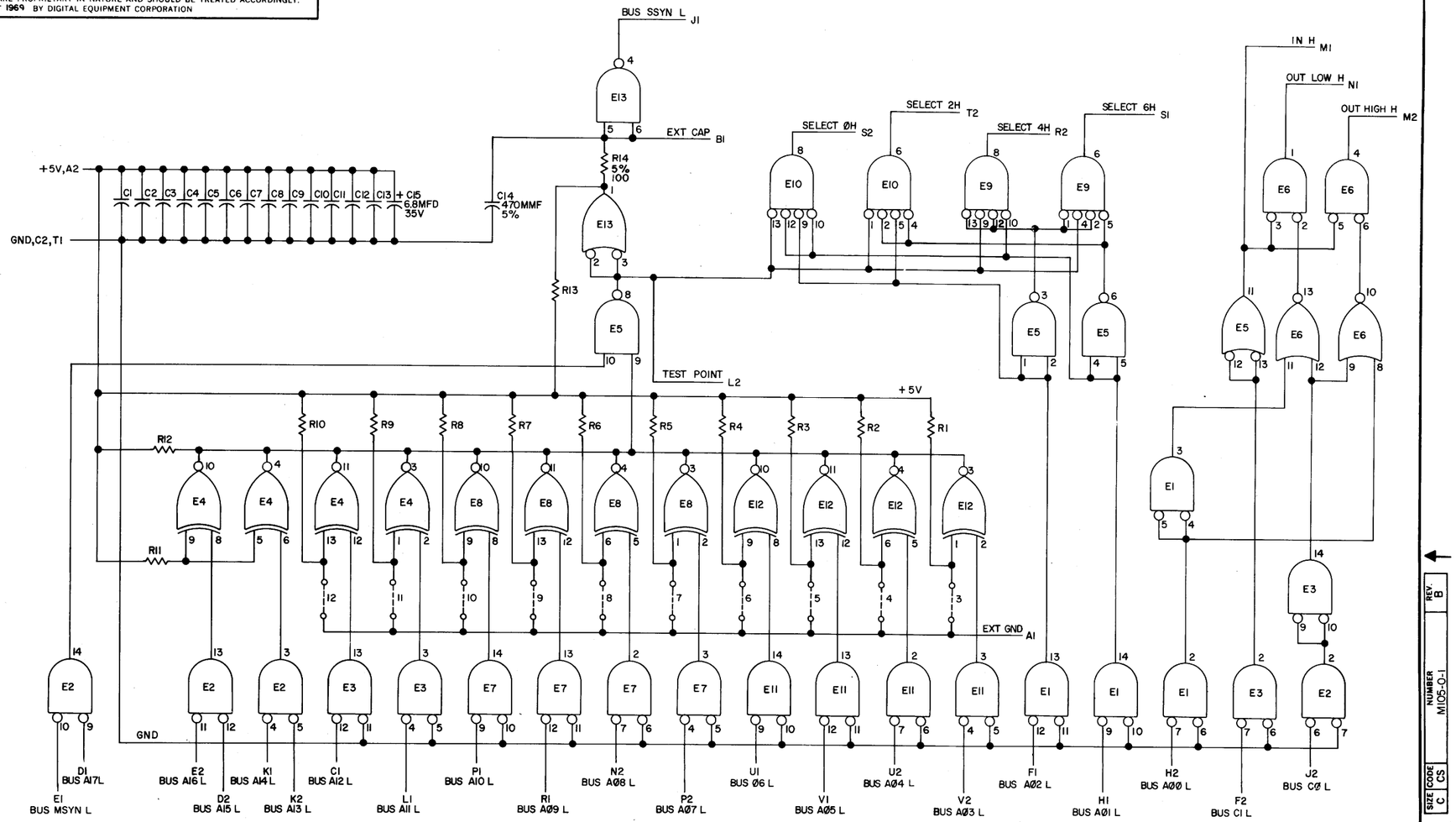

UNLESS OTHERWISE INDICATED:
O----O INDICATES JUMPERS
RESISTORS ARE 1K, 1/4W, 5%
CAPACITORS ARE .01MFD, 100V, 20%
E1, E2, E3, E7, E11 ARE DEC380
E4, E8, E12 ARE DEC8242
E9, E10 ARE DEC8815
E5 IS DEC74H00
E6 IS DEC7402
E13 IS DEC8881

PIN 1 ON E1, E2, E3, E7, E11 = GND
PIN 8 ON E1, E2, E3, E7, E11 = +5V
PIN 7 ON E4, E5, E6, E8, E9, E10, E12, E13 = GND
PIN 14 ON E4, E5, E6, E8, E9, E10, E12, E13 = +5V

REVISIONS			
CHK	CHG NO.	REV.	
TS	LR1	A	
4	00002	B	

DRN	C. Ritey	DATE 11-26-69
CHK'D	[illegible]	DATE 1-9-70
ENG	[illegible]	DATE [illegible]
PROD	[illegible]	DATE [illegible]

TRANSISTOR & DIODE CONVERSION CHART

DEC	EIA	DEC	EIA

digital EQUIPMENT CORPORATION
MAYNARD, MASSACHUSETTS

TITLE ADDRESS SELECTOR M105

SIZE	CODE	NUMBER	REV
C	CS	M105-0-1	B

PRINTED CIRCUIT REV. C

DEC FORM NO. DRC 102

AS 449-P6

Dist. [illegible]

REV. B
NUMBER M105-0-1
SIZE C CODE CS

THIS SCHEMATIC IS FURNISHED ONLY FOR TEST AND MAINTENANCE PURPOSES. THE CIRCUITS ARE PROPRIETARY IN NATURE AND SHOULD BE TREATED ACCORDINGLY.
COPYRIGHT 1969 BY DIGITAL EQUIPMENT CORPORATION

SIZE D | CODE CS | NUMBER M228-0-1 | REV

MK BLK START H AJ2
MK END H AF2
SYNC H BN2
MK DATA SYNC H AH1
MK DATA H BP2
MK BLK END H BU1
MK BLK MK H AE2
MK BLK SYNC H BS2

AF1 MK BLK START L
AH2 MK END L
BM2 SYNC L
AJ1 MK DATA SYNC L
AU2 MK DATA L
BV1 MK BLK END L
MK BLK MK L AD2
MK BLK SYNC L BT2

E1, E20, E9, E3, E15, E6, E12, E18, E2, E21, E4

BH1
AU1

AM2 W6 (1) H
AK1 W1-W5H
BV2 W2 (1) H
AL1 W8 (1) H
BE2 W3 (1) H
AK2 W7 (1) H
BF2 W9 (1) H
BJ2 W1 (1) H
AV2 ØTO STATE L
BH2 0 → WL
BF1 TP1 H
AS2

W9 E8, W8 E11, W7 E5, W6 E5, W5 E17, W4 E8, W3 E14, W2 E14, W1 E17

+3V
C23
R2 750
R1 330
AT2
BU2

SH ST H
ST BLK MK E10
ST REV E13
DATA E13
ST FINAL E16
ST CK E16
ST IDLE E10

GND
+3V
R3 750
C22
R4 330
AA2
BA2
+5V
AC2, AT1
BC2, BT1, GND
BC1

AN2 ST IDLE (1) H
AP2 SHIFT I H
AR2 ST BLK MK (1) H
BD2 ST IDLE (1) H
BS1 ST REV CK (1) H
BK2 DATA (1) H
BL2 ST FINAL (1) H
BR1 ST CK (1) H
BR2 SHIFT CK H

E7, E19, E4
AMI
ANI TPØ L

+5V
GND
C1 C2 C3 C4 C5 C6 C7 C8 C9 C10 C11 C12 C13 C14 C15 C16 C17 C18 C19 C20 C21 C24 C25 6.8MFD 35V 20%

UNLESS OTHERWISE INDICATED:
CAPACITORS ARE .01 MFD, 100V, 20%
RESISTORS ARE 1/4W, 5%
PIN 7 ON EACH IC = GND
PIN 14 ON EACH IC = +5V
E1, E20 ARE DEC7400N
E4 IS DEC7402N
E7 IS DEC7450N
E19 IS DEC7453N
E2, E3, E6, E9, E12, E15, E18, E21 ARE DEC7430N
E5, E8, E10, E11, E13, E14, E16, E17 ARE DEC7474N

REVISIONS | REV. | CHG NO. | CHG

DRN. BUTLER 8 6 69
CHK'D D. A. Jolitz 9/11/69
ENG. [illegible] 10/1/69
PROD. DATE

TRANSISTOR & DIODE CONVERSION CHART

DEC	EIA	DEC	EIA

digital EQUIPMENT CORPORATION MAYNARD, MASSACHUSETTS

TITLE MARK TRACK DECODER M228

SIZE	CODE	NUMBER	REV.
D	CS	M228-0-1	

PRINTED CIRCUIT REV. A

DEC FORM NO. DRD 101

DIST: X24, X34, X38 5
5 PINK

THIS SCHEMATIC IS FURNISHED ONLY FOR TEST AND MAINTENANCE PURPOSES. THE CIRCUITS ARE PROPRIETARY IN NATURE AND SHOULD BE TREATED ACCORDINGLY
COPYRIGHT 1969 BY DIGITAL EQUIPMENT CORPORATION

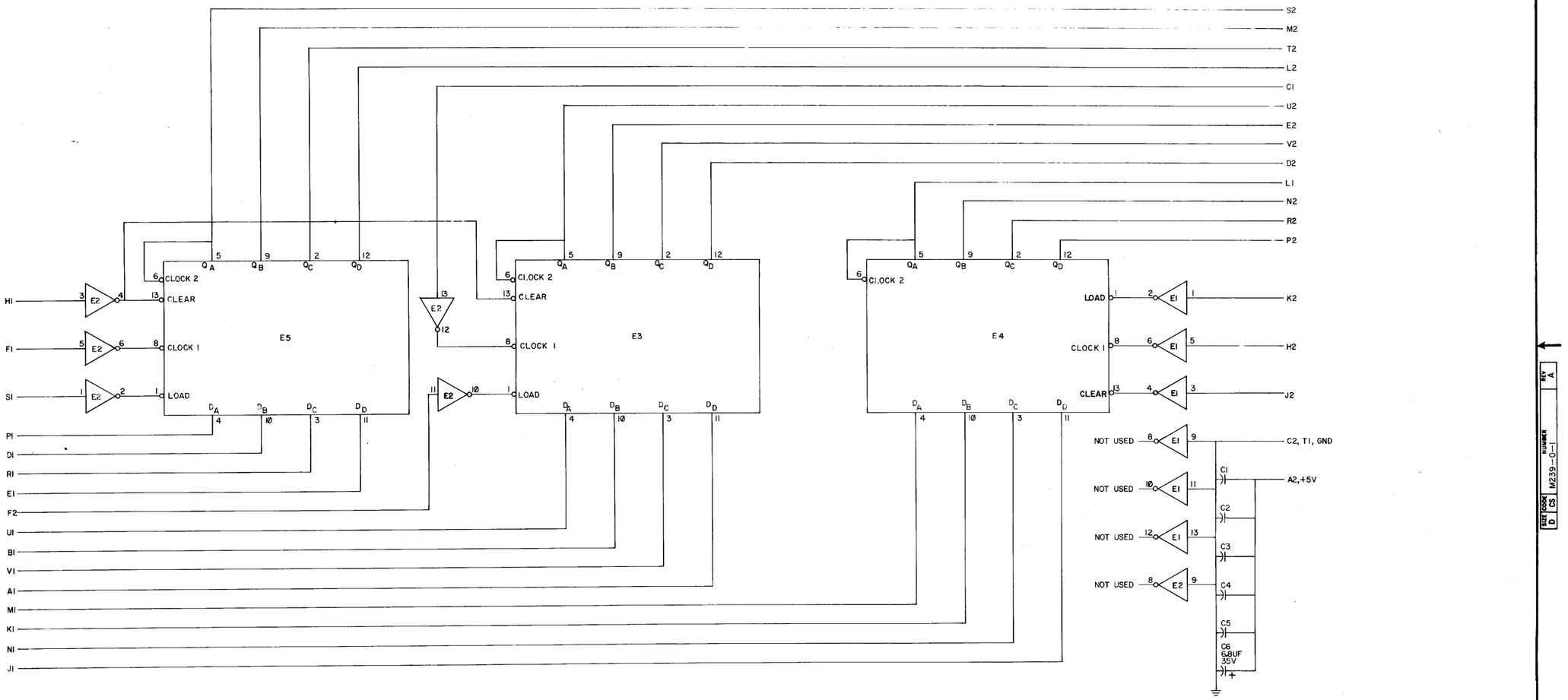

UNLESS OTHERWISE INDICATED:
CAPACITORS ARE .01UF, 100V, 20%
E3, E4, E5 ARE DEC74197
E1, E2 ARE DEC74H04
ON ALL IC'S PIN 14 = +5V, PIN 7 = GND

REVISIONS	CHG NO	REV
JSA	00001	A

DRN.	Jeanne French	DATE 8/25/70
CHK'D		DATE
ENG.		DATE
PROD		DATE

TRANSISTOR & DIODE CONVERSION CHART

DEC	EIA	DEC	EIA

digital EQUIPMENT CORPORATION MAYNARD, MASSACHUSETTS

TITLE THREE 4-BIT COUNTER/ REGISTER M239

SIZE	CODE	NUMBER	REV.
D	CS	M239-0-1	A

PRINTED CIRCUIT REV. A

DEC FORM NO. DSD 116

PINK

THIS SCHEMATIC IS FURNISHED ONLY FOR TEST AND MAINTENANCE PURPOSES. THE CIRCUITS ARE PROPRIETARY IN NATURE AND SHOULD BE TREATED ACCORDINGLY
COPYRIGHT 1970 BY DIGITAL EQUIPMENT CORPORATION

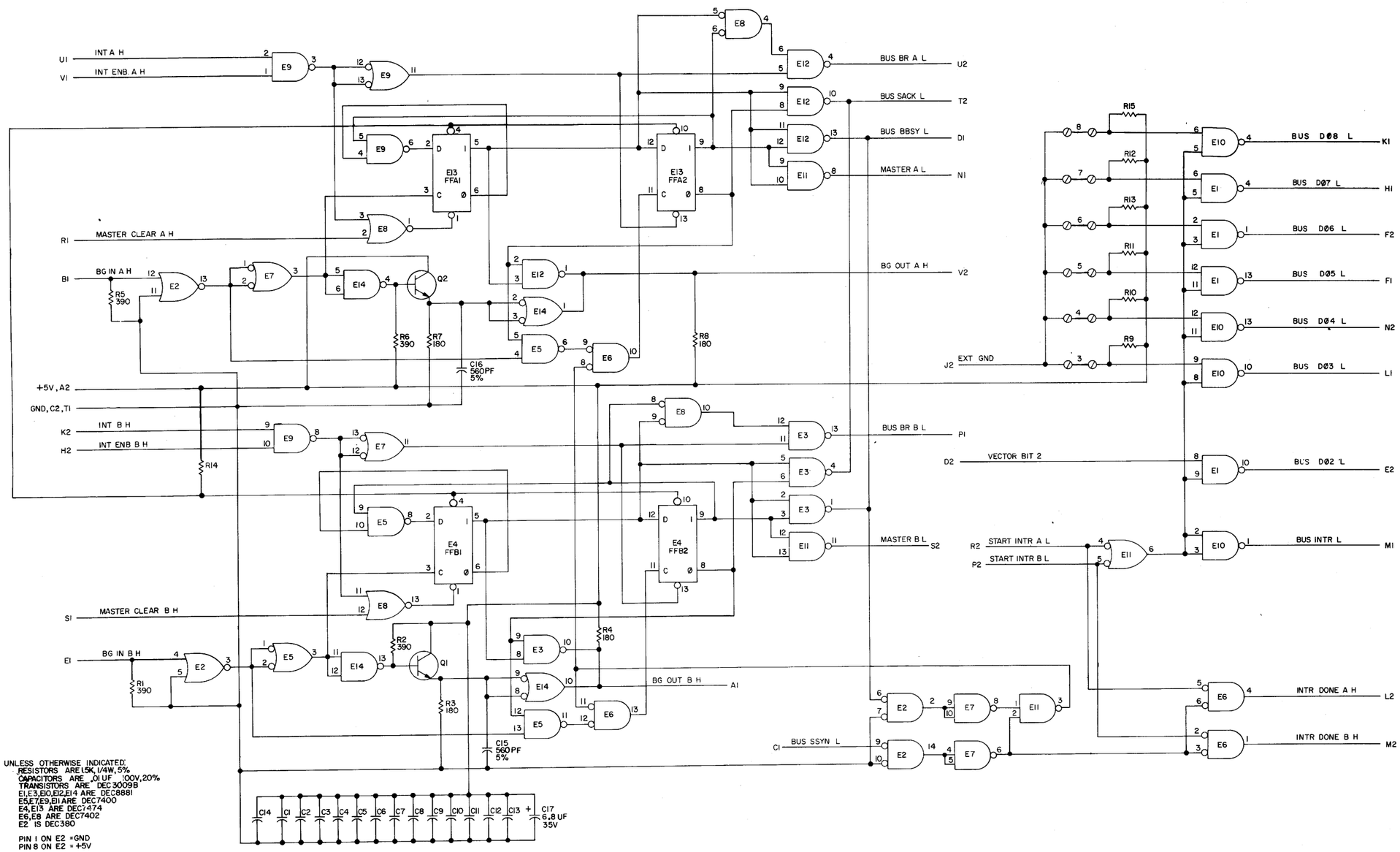

UNLESS OTHERWISE INDICATED:
RESISTORS ARE 1.5K, 1/4W, 5%
CAPACITORS ARE .01 UF 100V, 20%
TRANSISTORS ARE DEC3009B
E1,E3,E10,E12,E14 ARE DEC8881
E5,E7,E9,E11 ARE DEC7400
E4,E13 ARE DEC7474
E6,E8 ARE DEC7402
E2 IS DEC380

PIN 1 ON E2 = GND
PIN 8 ON E2 = +5V
PIN 7 ON E1,E3-E14 = GND
PIN 14 ON E1,E3-E14 = +5V
Ø = SPLIT LUGS
—— = JUMPERS

REVISIONS		
CHK	CHG NO	REV
Sub	00002	B

DRN S. Cooper DATE 12/31/70
CHK'D Ardway DATE 4/14/71
ENG DATE 1-4-71
PROD DATE

TRANSISTOR & DIODE CONVERSION CHART

DEC	EIA	DEC	EIA
DEC3009B	2N3009B		

digital EQUIPMENT CORPORATION MAYNARD, MASSACHUSETTS

TITLE INTERRUPT CONTROL M7820

SIZE	CODE	NUMBER	REV
D	CS	M7820-0-1	B

PRINTED CIRCUIT REV. B C

DIST. 324, 434, 435 2

(4)

P/NK

29

THIS SCHEMATIC IS FURNISHED ONLY FOR TEST AND MAINTENANCE PURPOSES. THE CIRCUITS ARE PROPRIETARY IN NATURE AND SHOULD BE TREATED ACCORDINGLY.
COPYRIGHT 1969 BY DIGITAL EQUIPMENT CORPORATION

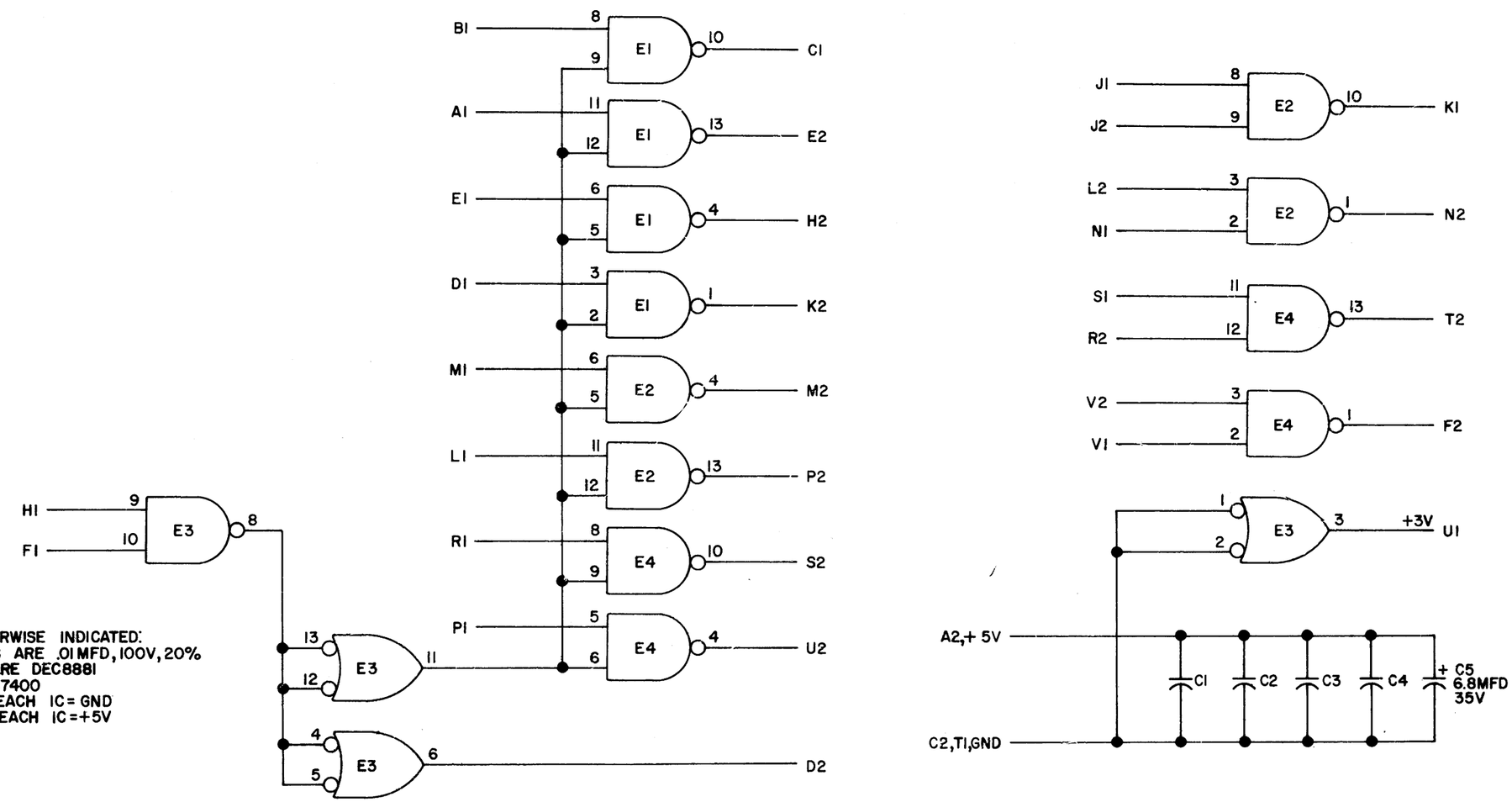

UNLESS OTHERWISE INDICATED:
CAPACITORS ARE .01 MFD, 100V, 20%
E1,E2,E4 ARE DEC8881
E3 IS DEC7400
PIN 7 ON EACH IC = GND
PIN 14 ON EACH IC = +5V

SIZE	CODE	NUMBER	REV.
B	CS	M783-0-1	

REVISIONS			
CHK	CHG NO.	REV.	

DRN.	A. Pitcey	DATE 11-21-69
CHK'D	[illegible]	DATE 1-7-70
ENG.	P.E. Jonson	DATE 2/25/70
PROD.		DATE

TRANSISTOR & DIODE CONVERSION CHART

DEC	EIA	DEC	EIA

digital EQUIPMENT CORPORATION
MAYNARD, MASSACHUSETTS

TITLE
UNIBUS DRIVERS M783

SIZE	CODE	NUMBER	REV.
B	CS	M783-0-1	

PRINTED CIRCUIT REV. A B

DEC FORM NO.
DRB 102

5 DIST. 324, 434, 4353 PINK

THIS SCHEMATIC IS FURNISHED ONLY FOR TEST AND MAINTENANCE PURPOSES. THE CIRCUITS ARE PROPRIETARY IN NATURE AND SHOULD BE TREATED ACCORDINGLY
COPYRIGHT 1969 BY DIGITAL EQUIPMENT CORPORATION

SIZE D | CODE CS | NUMBER M795-0-1 | REV B

INC.CONT-2H — ABI
CLK-2H — ACI
SEL-2 OUT LO-L — AE2
REG CLR L
SEL-2 OUT HI-L — BSI
REG CLR-H — ADI
CARRY OUT-2L — BS2
SEL-2 IN-L — BT2
SEL-1 IN-L — AD2
ADDR BUS-IL — BU2
CARRY OUT-IL — BP2
CARRY OUT (8 ORIG) L — BV1
SEL-1 OUT LO-L — BV2
SEL-1 OUT HI-L — BRI
CARRY IN L — BUI
INC. CONT-IH — AFI
CLK (16)H — AAI
AA2,+5V
BA2,+5V
AC2, AT1, BT1, GND
BC2

UNLESS OTHERWISE INDICATED:
CAPACITORS ARE .01uf, 100V, 20%
PIN 14 ON EACH IC = +5V
PIN 7 ON EACH IC = GND
E1, E30 ARE DEC74H40
E2, E17 ARE DEC74H55
E3, E5 ARE DEC7400
E4 IS A DEC7402
E6, E7, E8, E12, E13, E14, E18, E19, E20, E24, E25, E26 ARE DEC8881
E9, E10, E15, E16, E21, E22, E27, E28 ARE DEC8281
E11 IS A DEC7410
E33, E23 ARE DEC7420
E29, E31 ARE DEC8815
E32, E34 ARE DEC7430

C1 C2 C3 C4 C5 C6 C7 C8 C9 C10 C11 C12 C13 — C32 6.8pf 35V
C14 C15 C16 — C33 6.8pf 35V
C17 C18 C19 C20 C21 C22 C23
C24 C25 C26 C27 C28 C29 C30 C31

REVISIONS	DRN	CHK'D	ENG	PROG
REV	B			
ORIG/MOD	10000			
	00002			
DRN	jeanne french	DATE	7-8-70	
CHK'D		DATE		
ENG		DATE		
PROG		DATE		

TRANSISTOR & DIODE CONVERSION CHART

DEC	EIA	DEC	EIA

digital EQUIPMENT CORPORATION MAYNARD, MASSACHUSETTS

TITLE WC AND CMA MODULE M795

SIZE	CODE	NUMBER	REV.
D	CS	M795-0-1	B

PRINTED CIRCUIT REV. A B C

DEC FORM NO. DRB 118

PINK BLUE

THIS SCHEMATIC IS FURNISHED ONLY FOR TEST AND MAINTENANCE PURPOSES. THE CIRCUITS ARE PROPRIETARY IN NATURE AND SHOULD BE TREATED ACCORDINGLY
COPYRIGHT 1970 BY DIGITAL EQUIPMENT CORPORATION

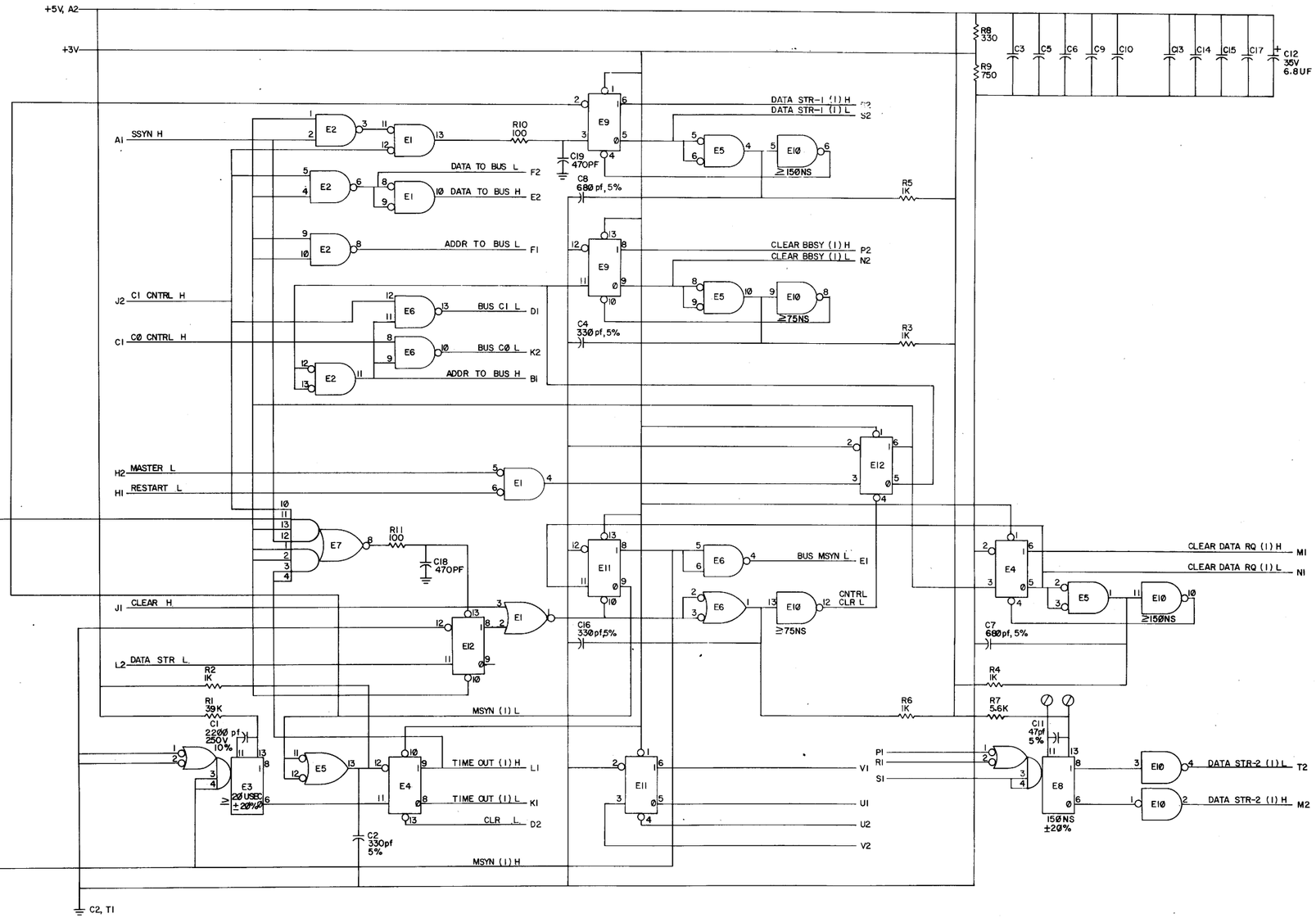

UNLESS OTHERWISE INDICATED:
RESISTORS ARE 1/4W, 5%
CAPACITORS ARE .01uf, 100V, 20%
E1 IS DEC7402
E2 IS DEC7400
E3, E8 ARE DEC9601
E4, E9, E11, E12 ARE DEC7474
E5 IS DEC7401
E6 IS DEC8881
E7 IS DEC74H55
E10 IS DE7404
⊘ = SPLIT LUGS

REVISIONS			
CHG	CHG NO.	REV.	
K-4	00001	A	
K-4	00002	B	
K-4	00003	C	
6	JE MAY 1/71		

DRN	Jeanne Sciacchitano	DATE 6/29/70
CHK'D		DATE 7-31-70
ENG		DATE 9-21-70
PROD		DATE

TRANSISTOR & DIODE CONVERSION CHART

DEC	EIA	DEC	EIA

digital EQUIPMENT CORPORATION MAYNARD, MASSACHUSETTS

TITLE: UNIBUS MASTER CONTROL M796

SIZE	CODE	NUMBER	REV.
D	CS	M796 -0-1	C

PRINTED CIRCUIT REV. C

DEC FORM NO. 8888 116

M796 -0-1 C
SIZE D CODE CS

THIS SCHEMATIC IS FURNISHED ONLY FOR TEST AND MAINTENANCE PURPOSES. THE CIRCUITS ARE PROPRIETARY IN NATURE AND SHOULD BE TREATED ACCORDINGLY.
COPYRIGHT 1970 BY DIGITAL EQUIPMENT CORPORATION

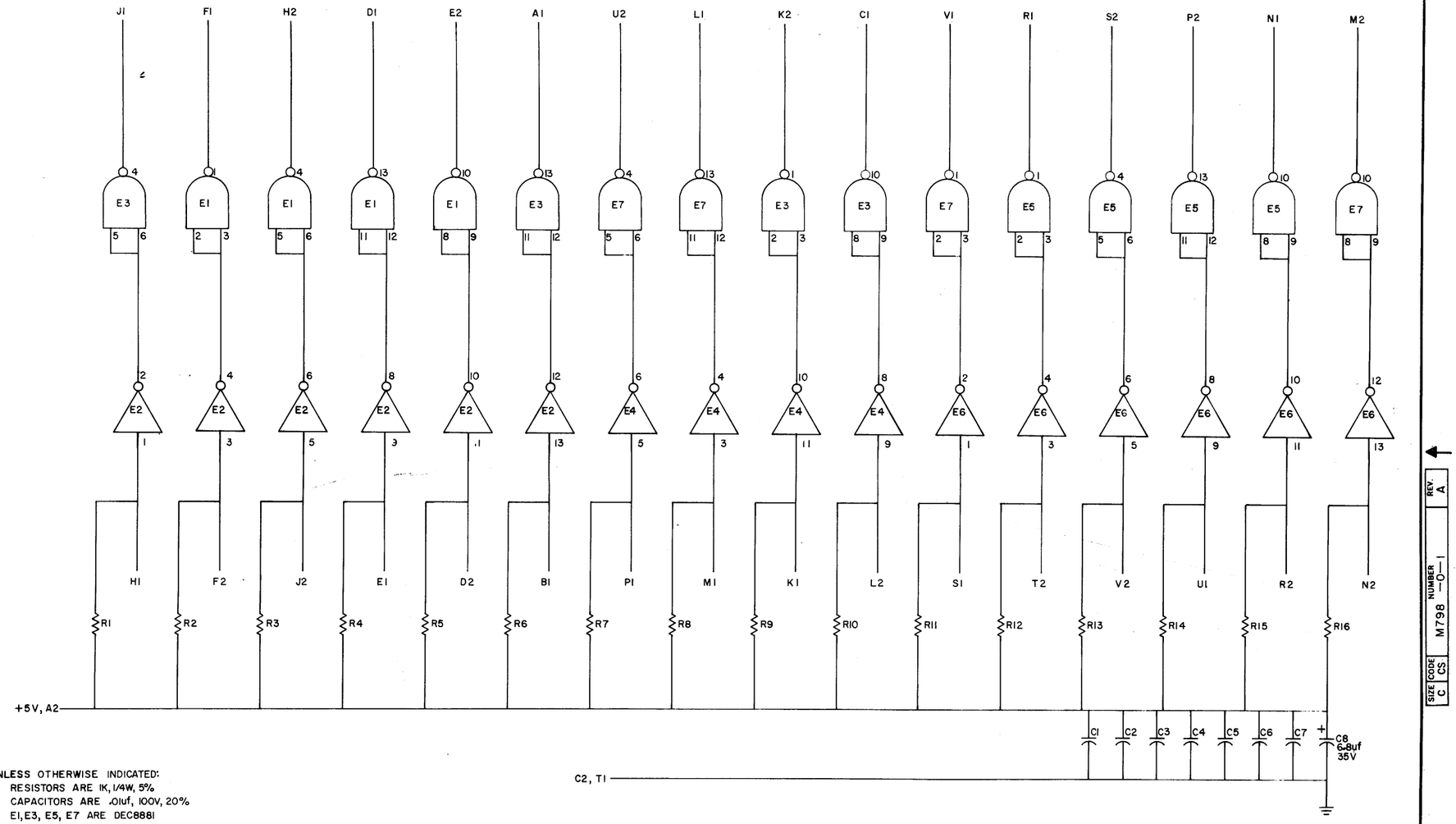

UNLESS OTHERWISE INDICATED:
RESISTORS ARE 1K, 1/4W, 5%
CAPACITORS ARE .01uf, 100V, 20%
E1, E3, E5, E7 ARE DEC8881
E2, E4, E6 ARE DEC7404

REVISIONS		
CHK	CHG NO.	REV.
	00001	A

DRN.	Jeanne French	DATE 7/1/70
CHK'D.	J. Marcean	DATE 7-28-70
ENG.	E. Butler	DATE 8-1-70
PROD.		DATE

TRANSISTOR & DIODE CONVERSION CHART

DEC	EIA	DEC	EIA

digital EQUIPMENT CORPORATION
MAYNARD, MASSACHUSETTS

TITLE UNIBUS DRIVER M798

SIZE	CODE	NUMBER	REV.
C	CS	M798 -0-1	A

PRINTED CIRCUIT REV. B

DEC FORM NO. DRC 102

DIST. 324-4 ... 4 P.N. BLUE

SIZE	CODE	NUMBER	REV.
B	CS	G879-0-1	

THIS SCHEMATIC IS FURNISHED ONLY FOR TEST AND MAINTENANCE PURPOSES. THE CIRCUITS ARE PROPRIETARY IN NATURE AND SHOULD BE TREATED ACCORDINGLY.
COPYRIGHT 1969 BY DIGITAL EQUIPMENT CORPORATION

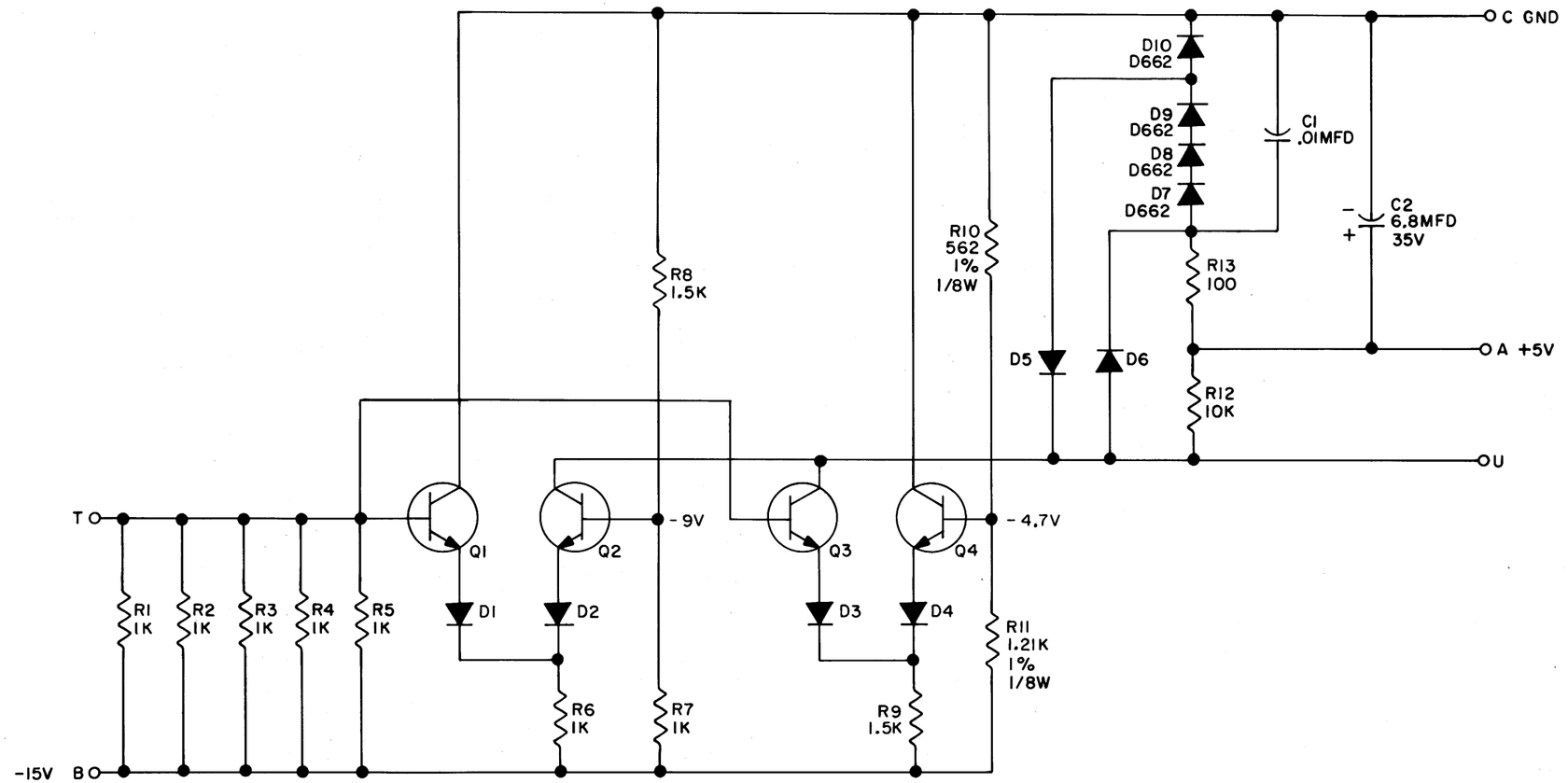

UNLESS OTHERWISE INDICATED:
RESISTORS ARE 1/4W, 5%
DIODES ARE D664
TRANSISTORS ARE DEC3009B

REVISIONS	REV.	CHG NO.	CHK

DRN. BUTLER	DATE 7/2/69	
CHK'D G. Yanga	DATE 7/7/69	
ENG. D. Zuba	DATE 7/13/69	
PROD.	DATE	

TRANSISTOR & DIODE CONVERSION CHART

DEC	EIA	DEC	EIA
D664	IN3606		
D662	IN645		
DEC3009B	2N3009		

digital EQUIPMENT CORPORATION
MAYNARD, MASSACHUSETTS

TITLE
TRANSPORT DETECTOR G879

SIZE	CODE	NUMBER	REV.
B	CS	G879-0-1	
PRINTED CIRCUIT REV.		A	

DEC FORM NO.
DRB 102

DIST. 3-4,434,43[illegible]

SIZE	CODE	NUMBER	REV.
B	CS	G888-0-1	

THIS SCHEMATIC IS FURNISHED ONLY FOR TEST AND MAINTENANCE PURPOSES. THE CIRCUITS ARE PROPRIETARY IN NATURE AND SHOULD BE TREATED ACCORDINGLY.
COPYRIGHT 1969 BY DIGITAL EQUIPMENT CORPORATION

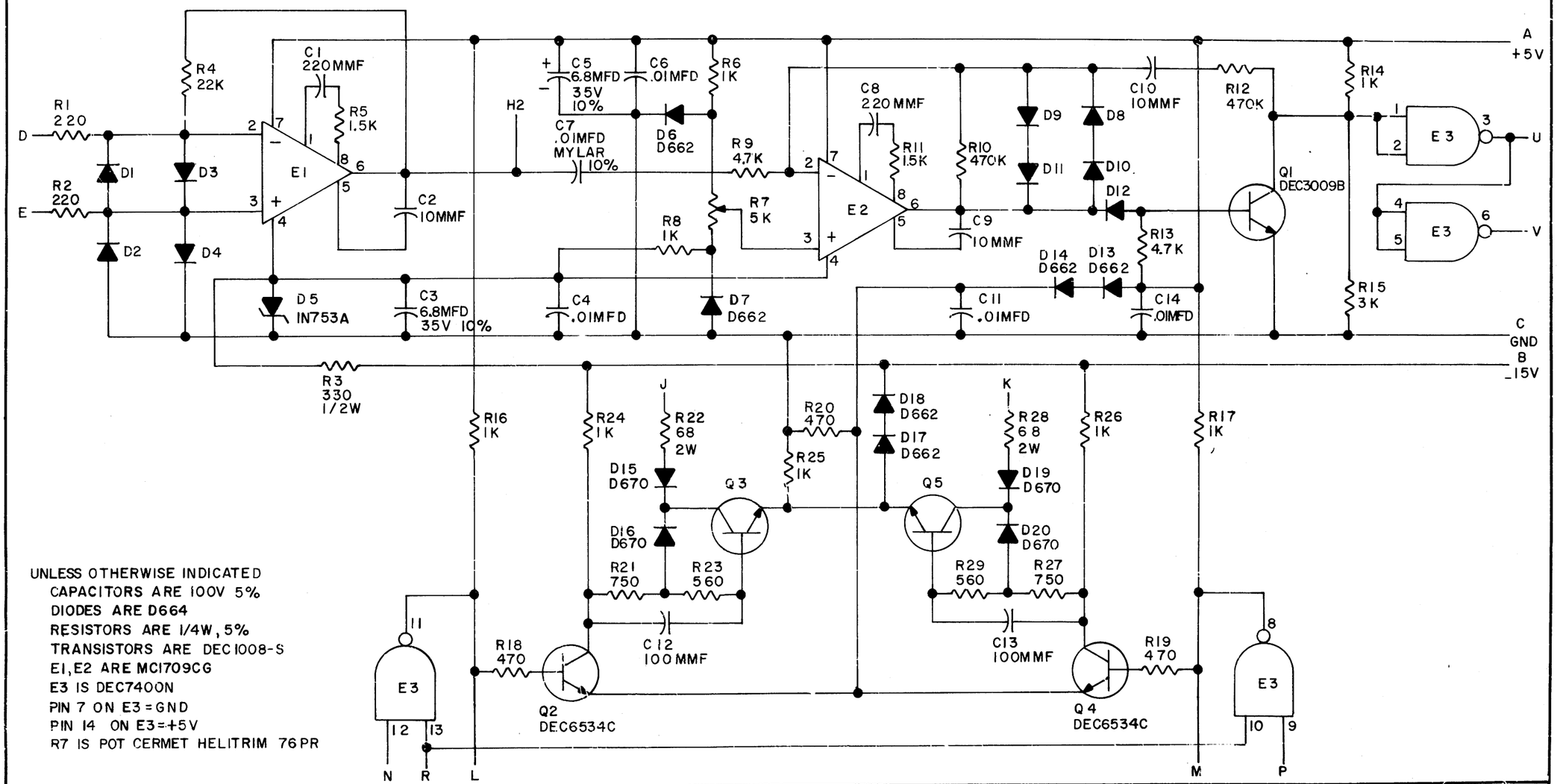

UNLESS OTHERWISE INDICATED
CAPACITORS ARE 100V 5%
DIODES ARE D664
RESISTORS ARE 1/4W, 5%
TRANSISTORS ARE DEC1008-S
E1, E2 ARE MC1709CG
E3 IS DEC7400N
PIN 7 ON E3 = GND
PIN 14 ON E3 = +5V
R7 IS POT CERMET HELITRIM 76PR

REVISIONS	REV	CHG NO	CHK

		DATE
DRN.	G Clemmer	8-2969
CHK'D	R.A. Valette	9/3/69
ENG.	J Cabrera	9/25/69
PROD.		DATE

TRANSISTOR & DIODE CONVERSION CHART

DEC	EIA	DEC	EIA
D664	IN3606	DEC1008-S	MM1008
D662	IN645		
D670	SAME		
DEC3009B	2N3009B		
DEC6534C	MPS6534		

digital EQUIPMENT CORPORATION
MAYNARD, MASSACHUSETTS

TITLE MANCHESTER READER/WRITER G888

SIZE	CODE	NUMBER	REV.
B	CS	G888-0-1	
PRINTED CIRCUIT REV.	A		

DEC FORM NO.
DRB 102

DIST: 326.434.435

SIZE B | CODE CS | 854-0-1 NUMBER | REV. A

THIS SCHEMATIC IS FURNISHED ONLY FOR TEST AND MAINTENANCE PURPOSES. THE CIRCUITS ARE PROPRIETARY IN NATURE AND SHOULD BE TREATED ACCORDINGLY.
COPYRIGHT 1968 BY DIGITAL EQUIPMENT CORPORATION

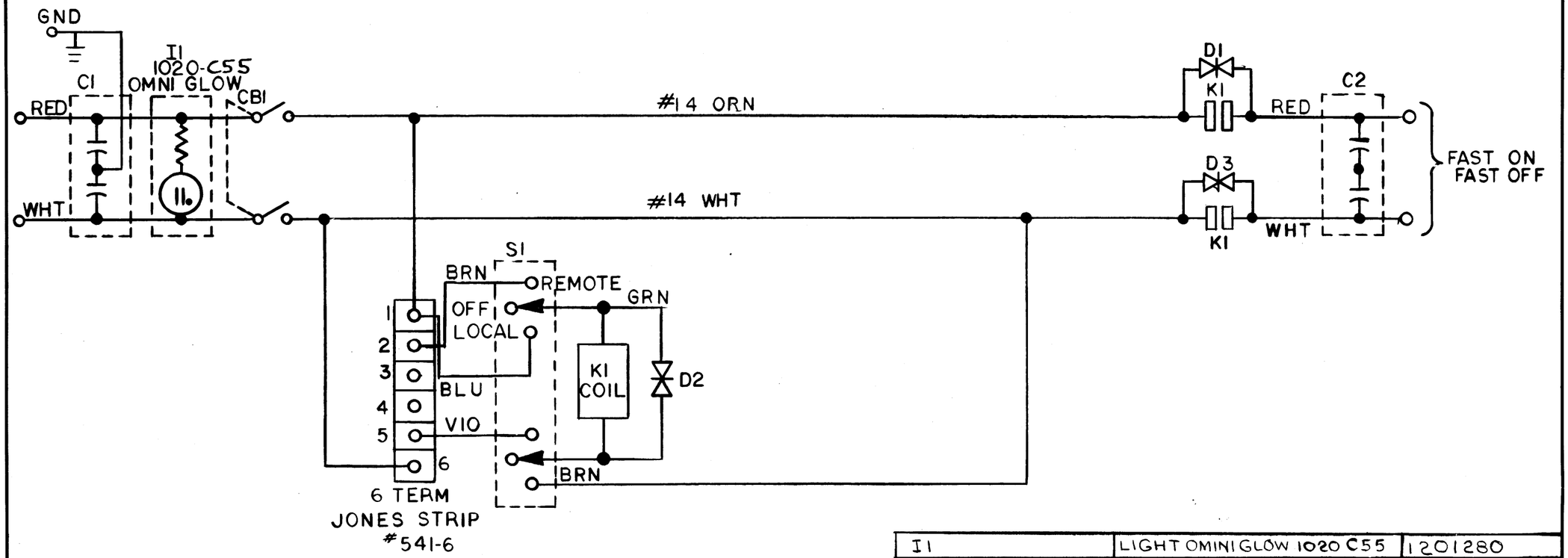

REF DESIGNATION	DESCRIPTION	PART NO
	PARTS LIST	A-PL-854-0-0
I1	LIGHT OMNIGLOW 1020 C55	1201280
D1, D2, D3	DIODE THY 6RS20SP4B4	1100106
CB1	CIR BREAKER #190-220-104	1201218
K1	RELAY EM-4, 115V	1205768
S1	TOGGLE SW CH 7563K6	1205964
C1 & C2	CAP. 2X.1MFD 1KVDC	1000034

PARTS LIST

REVISIONS	CHK	CHG NO.	REV.
		00002	A

DRN.	P. LeBlanc	DATE 10-21-68
CHKD.		DATE 11/7/68
ENG.	G.W. GERELDS	DATE 11/15/68
PROD.	G.W. GERELDS	DATE 11/15/68

TRANSISTOR & DIODE CONVERSION CHART

DEC	EIA	DEC	EIA

digital EQUIPMENT CORPORATION MAYNARD, MASSACHUSETTS

TITLE POWER CONTROL 854

SIZE	CODE	NUMBER	REV.
B	CS	854-0-1	A

PRINTED CIRCUIT REV.

DEC FORM NO. DRB 102

DIST. 324 434 435 3?1 4?6 438 PINK