REVISIONS					
REV	DESCRIPTION	DR	CH	DATE	APPROVAL
H0	PRODUCTION RELEASE ENSCRIBE	KF	BP	10-APR-80	
H1	INCORP PER EN 8385H	KF	KL	7/11/83	
H2	INCORP PER EN 9220H	KF	KL		
H3	INCORP PER EN 9479D	KF	KL		
H4	INCORP PER EN 9610D	KF	KL		
H5	INCORP PER EN 9714H	KF	KL	7/10/84	

J3	SIGNAL	DIRECTION	LOC.
PIN B01	SPARE		
B02			
B03			
B04			
B05			
B06			
B07			
B08			
B09			
B10			
B11			
B12			
B13			
B14			
B15			
B16			
B17			
B18			
B19			
B20			
B21			
B22			
B23			
B24			
B25			
B26			
B27			
B28			
B29			
B30			
B31			
B32			
B33			
B34			
B35			
B36			
B37			
B38			
B39			
B40			
B41			
B42			
B43			
B44			
B45			
B46			
B47			
B48			
B49			
B50	SPARE		
A01	TRP	(TP) →	C89
A02	QPFD	(TP) →	C126
A03	FULL	(TP) →	
A04	CIE-	(TP) →	C90
A05	CUSQ-	(TP) →	A123
A06	PFE	(TP) →	A89
A07	SPARE		
A08	MIN	(TP) →	C78
A09	SPARE		
A10			
A11			
A12			
A13			
A14			
A15			
A16			
A17	SPARE		
A18	SNCZ	(TP) →	A97
PIN A19	SPARE		

J3 CONT	SIGNAL	DIRECTION	LOC.
PIN A20	SPARE		
A21			
A22			
A23			
A24			
A25			
A26			
A27			
A28			
A29			
A30			
A31			
A32			
A33			
A34	SPARE		
A35	STRTI-	(TP) →	C76
A36	SPARE		
A37			
A38			
A39			
A40			
A41			
A42			
A43			
A44			
A45			
A46			
A47			
A48			
A49	SPARE		
PIN A50	MBYT-	(TP)	C50

UNUSED GATES/IC			
I/C DESIG.	I/C TYPE	UNUSED PIN IN	UNUSED PIN OUT
87	7432	9,10	8

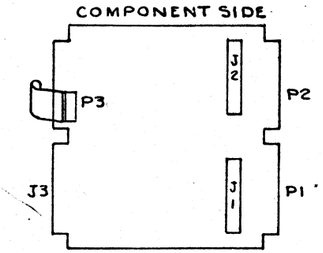

TABULATION BLOCK	
DASH NO.	DESCRIPTION
- 00	WITH POWER FAIL
- 01	W/OUT PWR FAIL
- 02	WITH RESTART
(10) - 03	ACTIVE DMA

(10) DASH 03 IS IDENTICAL TO DASH 00.

(9) THIS SIGNAL CONNECTED THRU MOTHERBOARD ONLY.

8. BIDIRECTION SIGNAL DENOTED BY —⋈—
7. OUTPUT SIGNAL DENOTED BY —▷—
6. INPUT SIGNAL DENOTED BY —◁—
5. RESISTOR PACKS ARE 1KOHMS, ±5%, 1/4 W.
4. 2.2 MICROFARAD CAPACITORS ARE ±10%, 35V.
3. .022 MICROFARAD CAPACITORS ARE -80%-20%, 25V.
2. RESISTORS ARE IN OHMS, ±5%, 1/4 W.
1. SEE DRAWING NUMBER 73-53506-XX FOR ASSEMBLY DRAWING.

NOTES: UNLESS OTHERWISE SPECIFIED

PROPRIETARY RIGHTS NOTICE
THIS DOCUMENT AND INFORMATION THAT IT CONTAINS ARE THE PROPERTY OF COMPUTER AUTOMATION, INC. RIGHTS TO DUPLICATE OR OTHERWISE COPY THIS DOCUMENT AND RIGHTS TO DISCLOSE THE DOCUMENT AND SUCH INFORMATION TO OTHERS AND THE RIGHT TO USE THE INFORMATION CONTAINED THEREIN, MAY BE ACQUIRED ONLY BY WRITTEN PERMISSION SIGNED BY A DULY AUTHORIZED OFFICER OF COMPUTER AUTOMATION, INC.

NOTES UNLESS SPECIFIED			
1. TOLERANCES .XX ±.03 ANGULAR .XXX ±.010 ±½°	DR	G. FONTAN	10/1/79
2. BREAK ALL SHARP EDGES .010 APPROX.	CH	[illegible]	11/27/79
3. ALL DIM. IN INCHES	DSG	G. FONTAN	10/1/79
	ENGR	[illegible]	6/5/84

DASH NO.	NEXT ASSEMBLYS

PROPRIETARY RIGHTS NOTICE
THIS DOCUMENT AND INFORMATION THAT IT CONTAINS ARE THE PROPERTY OF COMPUTER AUTOMATION, INC. RIGHT TO DUPLICATE OR OTHERWISE COPY THIS DOCUMENT AND RIGHTS TO DISCLOSE THE DOCUMENT AND SUCH INFORMATION TO OTHERS AND THE RIGHT TO USE THE INFORMATION CONTAINED THEREIN, MAY BE ACQUIRED ONLY BY WRITTEN PERMISSION SIGNED BY A DULY AUTHORIZED OFFICER OF COMPUTER AUTOMATION, INC.

ComputerAutomation
18651 Von Karman, Irvine, Calif. 92664

TITLE: LOGIC DIAGRAM — PROCESSOR FULL/CARD

SIZE	DWG. NO.	REV
D	75-53506-XX	H5

DO NOT SCALE DRAWING | SCALE = NONE | SHT. 1 OF 18

31

DRAWING NO. 75-53506-XX H5

PRINTED ON DIETZGEN-POST CLEARPRINT 1000-H

CØNNECTØR SIGNALS

P1	SIGNAL	DIRECTIØN	LOC.
PIN 101	GND	←	
102	GND	←	
103	+12V		
104	+12V		
105	+12V		
106	+12V		
107	−12V		
108	−12V		
109	SSW−	←	A77
110	IF−	→	B63
111	TYLF	←	B10
112	+5H	←	D122
113	+5V	←	
114	+5V	←	
115	MST−	→	
116	SPARE		
117	MACK−	←	A112
118	RD−	→	D105
119	TYP I−	→	B10
120	SLB−	→	C49
121	PFD−	↔	
122	MDIS−	→	C121
123	ABØ8−	→	C65
124	ABØ9−	→	C65
125	ABI0−	→	D65
126	ABII−	→	D65
127	GND	←	
128	GND	←	
129	ABI2−	→	B65
130	ABI3−	→	B65
131	ABI4−	→	B65
132	ABI5−	→	B65
133	AL−	→	B10
134	BM−	→	C114
135	STØP−	→	C115
136	SACK−	→	B10
137	ØVF−	→	B81
138	START−	→	B122
139	DBØØ−	↔	A63
140	DBØI−	↔	A62
141	DBØ2−	↔	B62
142	DBØ3−	↔	B62
143	+5V	←	
144	+5V	←	
145	DBØ4−	↔	B62
146	DBØ5−	↔	B62
147	DBØ6−	↔	C62
148	DBØ7−	↔	B62
149	DBØ8−	↔	C62
150	DBØ9−	↔	C62
151	DBI0−	↔	C62
152	DBII−	↔	C62
153	DBI2−	↔	D62
154	DBI3−	↔	D62
155	DBI4−	↔	D62
156	DBI5−	↔	D62
157	EXEC−	→	
158	IN−	→	
159	GND	←	
160	GND	←	
161	IØCL−	→	B110
162	ØUT−	→	B10
163	CLK−	→	
164	SER−	←	B112
165	IUR−	←	C104
166	ILI−	NØT USED	
167	IAR−	→	
168	IL2−	NØT USED	
169	RST−	→	C121
170	IUA−	→	
171	PLSE−	→	
172	ECHØ−	→	
173	+5V	←	
174	+5V	←	
175	AEØ3−	→	A65
176	ABØ4−	→	A65
177	ABØ5−	→	A65
178	ABØ6−	→	C65
179	ABØ7−	→	C65
180	ABØØ−	→	B65
181	ABØI−	→	D65
182	ABØ2−	→	A65
183	SERV−	→	B121
184	CINT−	←	D104
185	GND	←	
PIN 186	GND	←	

P2	SIGNAL	DIRECTIØN	LOC.
PIN 201	GND	←	
202	GND	←	
203	+12V	NØT USED	
204	+12V		
205	+12V		
206	+12V		
207	−12V		
208	−12V		
209	DPIN−	NØT USED	
210	DPØT−	→	
211	SPARE		
212	SPARE		
213	+5V	←	
214	+5V	←	
215	MST−	→	C114
216	SPARE		
217	MACK−	←	A112
218	RD−	→	D105
219	RESERVE		
220	SLB−	NØT USED	
221	PFD−	↔	
222	MDIS−	→	C121
223	ABØ8−	NØT USED	
224	ABØ9−	NØT USED	
225	ABI0−	→	
226	ABII−	→	
227	GND	←	
228	GND	←	
229	ABI2−	→	
230	ABI3−	→	
231	ABI4−	→	
232	ABI5−	NØT USED	
233	SPARE		
234	SPARE		
235	STØP−	NØT USED	
236	SACK−	→	D114
237	MEIN−	NØT USED	
238	MBØT	→	
239	DBØØ−	NØT USED	
240	DBØI−	↔	
241	DBØ2−	↔	
242	DBØ3−	NØT USED	
243	+5V	←	
244	+5V	←	
245	DBØ4−	NØT USED	
246	DBØ5−	↔	
247	DBØ6−	↔	
248	DBØ7−	↔	
249	DBØ8−	↔	
250	DBØ9−	↔	
251	DBI0−	↔	
252	DBII−	↔	
253	DBI2−	↔	
254	DBI3−	↔	
255	DBI4−	↔	
256	DBI5−	NØT USED	
257	EXEC−	→	B114
258	IN−	→	A114
259	GND	←	
260	GND	←	
261	IØCL−	→	A110
262	ØUT−	→	A114
263	CLK−	→	D114
264	SER−	←	C112
265	IUR−	←	
266	ILI−	←	D104
267	IAR−	→	B114
268	IL2−	→	C104
269	RST−	NØT USED	
270	IUA−	→	D114
271	PLSE−	→	B114
272	ECHØ−	→	C114
273	+5V	←	
274	+5V	←	
275	ABØ3−	NØT USED	
276	ABØ4−	↔	
277	ABØ5−	↔	
278	ABØ6−	↔	
279	ABØ7−	↔	
280	ABØØ−	↔	
281	ABØI−	↔	
282	ABØ2−	↔	
283	PRIN−	NØT USED	
284	PRØT−	→	C100
285	GND	←	
PIN 286	GND	←	

P3	SIGNAL	DIRECTIØN	LOC.
PIN 01	ØVCLK−	←	A86
02	ØVØ2	←	C86
03	FWSØØ	↔	B31
04	MDISI−	→	D122
05	ØVØI	←	C86
06	ILØCK−	→	D52
07	SLØCK−	→	A53
08	GND	←	
09	FWSØI	↔	C31
10	FRSCO	↔	C31
11	FRSØI	↔	D31
12	ALM	←	A38
13	WSTB−	←	C80
14	ØVØØ	←	B86
15	FWUL−	↑	A28
16	LNKØ2	↑	D45
17	WRSØI−	↑	B53
18	FREU−	↑	C28
19	LNKCI−	↑	D45
20	MRSØØ	↓	B53
21	MRSØI	←	A53
22	CSØ8−	←	D87
23	GND	←	
24	INHBI−	→	A53
25	RØMQØ−	←	B75
26	RMAØI	←	D50
27	WRSCO−	←	B53
28	SIF	←	C64
29	FREL−	←	A28
30	TIMØØ	←	B75
31	TIMØI	←	B75
32	TIMØ2	←	B75
33	LNKØØ	←	B48
34	RESVD		
35	FW	←	B80
36	MWMXN−	←	D44
37	TSTR	→	C73
38	IPCLR	←	C99
39	PCSØØ	←	B56
40	PCSØ3	←	C56
41	RMXØN−	←	B53
42	PCSØI	←	B56
43	BCLK−	←	D64
44	PCSØ2	←	C56
45	DFZER	←	C95
46	ALCN	←	B38
47	IØCLI	←	C104
48	MRST−	←	C63
49	IF	←	C63
PIN 50	GND	←	

J1	SIGNAL	DIRECTIØN
PIN A01	GND	→
A02	SPARE	
A03	SPARE	
A04	+12V	→
A05	−12V	→
A06	RESVD	
A07	SSW−	←
A08	TILF	→
A09	+5H	→
A10	BSØ3	→
A11	SPARE	
A12	+5V	→
A13	MST−	→
A14	MACK−	←
A15	SPARE	
A16	FCLK−	→
A17	PFD−	→
A18	ABØ8−	→
A19	SPARE	
A20	SPARE	
A21	ABI0−	→
A22	GND	→
A23	SPARE	
A24	ABI2−	→
A25	SPARE	
A26	ABI4−	→
A27	AL−	→
A28	SPARE	
A29	SPARE	
A30	SPARE	
A31	DBCØ−	↔
A32	DBC2−	↔
A33	DBØ4−	↔
PIN A34	SPARE	

J1-CØNT.	SIGNAL	DIRECTIØN	LOC.
PIN A35	+5V	→	
A36	SPARE		
A37	SPARE		
A38	DBØ8−	↔	C62
A39	DBØ6−	↔	C62
A40	DBII−	↔	C62
A41	SPARE		
A42	DBI2−	↔	D62
A43	DBI5−	↔	D62
A44	SPARE		
A45	SPARE		
A46	EXEC−	→	B113
A47	GND	←	
A48	SPARE		
A49	IØCL−	→	B110
A50	CLK−	→	D113
A51	IUR−	←	C104
A52	SPARE		
A53	IAR−	→	B113
A54	RST−	→	C121
A55	BKDIS−	→	
A56	PLSE−	→	B113
A57	ECHØ−	→	C113
A58	+5V	→	
A59	ABQ3−	→	A65
A60	AEØ5−	→	A65
A61	ABØ7−	→	C65
A62	ABØI−	→	B65
A63	STEND	→	B108
A64	BSØ4	→	C105
A65	GND	←	
B01	GND	←	
B02	ØFST−	→	C104
B03	SPARE		
B04	+12V	←	
B05	−12V	←	
B06	IØØK2	→	C126
B07	IF ✱−	→	B63
B08	SPARE		
B09	+5H	→	D128
B10	ØATLD−	→	A125
B11	ØPT−	→	B104
B12	+5V	←	
B13	SPARE		
B14	RD−	→	D105
B15	ØPRØT	→	C104
B16	SLB−	→	C49
B17	MDIS−	→	C121
B18	ABØ9−	→	C65
B19	SPARE		
B20	SPARE		
B21	ABII−	→	D65
B22	GND	←	
B23	SPARE		
B24	ABI3−	→	B65
B25	SPARE		
B26	ABI5−	→	B65
B27	SPARE		
B28	SPARE		
B29	SPARE		
B30	SPARE		
B31	DBØI−	↔	B62
B32	DBØ3−	↔	B62
B33	DBØ5−	↔	B62
B34	SPARE		
B35	+5V	→	
B36	SPARE		
B37	SPARE		
B38	DBØ9−	↔	C62
B39	DBØ7−	↔	B62
B40	DBI0−	↔	C62
B41	STICM	→	B108
B42	DBI3−	↔	D62
B43	DBI4−	↔	D62
B44	SPARE		
B45	SPARE		
B46	IN−	→	A113
B47	GND	←	
B48	SPARE		
B49	ØUT−	→	A113
B50	SER−	←	B112
B51	SPARE		
B52	SPARE		
B53	SPARE		
B54	IUA−	→	D113
PIN B55	SPARE		

J1-CONT.	SIGNAL	DIRECTION	LOC.
PIN B56	XPRØI	→	C100
B57	2MHZ		
B58	+5V		
B59	ABQ4−		A65
B60	ABQ6−		C65
B61	ABQØ−		B65
B62	ABQ2−	→	A65
B63	GMDIS−	→	C121
B64	CINI−	←	D104
PIN B65	GND	←	

J2	SIGNAL	DIRECTIØN	
PIN A01	GND		
A02	GND		
A03	IRQ7−	←	B60
A04	IRQ6−	←	C60
A05	IRQØ	←	A60
A06	IRI3−	←	D60
A07	IRQ8−	←	C60
A08	IRI5−	←	D58
A09	I67−	←	B58
A10	+5V		
A11	+5V		
A12	SPARE		
A13	ALUØØ	←	B40
A14	ALUØ2	←	B40
A15	WMBBS−	←	D44
A16	RESVD		
A17	ØPDO4−	→	C59
A18	ØPDØØ−	→	B59
A19	RESVD		
A20	RESVD		
A21	GND	→	
A22	GND	→	
A23	RESVD		
A24	RESVD		
A25	IRIØ−	→	C60
A26	MSELF−	→	D69
A27	RESVD		
A28	MSELF	→	C69
A29	RESVD		
A30	RESVD		
A31	RESVD		
A32	RESVD		
A33	+5V	→	
A34	+5V	→	
A35	RESVD		
A36	IØSØØ	←	A120
A37	RESVD		
A38	IRQ2−	→	B60
A39	RESVD		
A40	RESVD		
A41	SPARE		
A42	SPARE		
A43	CSØ2	←	D72
A44	SPARE		
A45	SPARE		
A46	GND	→	
A47	GND	→	
A48	BSØ4	→	C105
A49	SPARE		
A50	RESVD		
A51	SPARE		
A52			
A53			
A54			
A55	SPARE		
A56	+5V	→	
A57	+5V	→	
A58	NSER−	→	C108
A59	INTFK	←	A104
A60	INTF−	←	A101
A61	BSØ3−	←	C105
A62	RESVD		
A63	SPARE		
A64	GND	→	
A65	GND	→	
BCI	GND	→	
BC2	GND	→	
BC3	2MHZ	←	
BC4	IRQI−	→	A60
BC5	IRQ5−	→	B60
BC6	IRI4−	→	D60
BC7	IRQ9−	→	C60
PIN BC8	IRII−	→	C60

J2-CØNT.	SIGNAL	DIRECTIØN	LOC.
PIN B09	IIL6−	←	B58
B10	+5V	→	
B11	+5V	→	
B12	IRI2−	→	C60
B13	STØPI−	→	C114
B14	ALUØI	←	B40
B15	ALUØ3	←	B40
B16	IRØ4− (TP)	→	B60
B17	ØPDOI−	→	B59
B18	ØPDO5−	→	D59
B19	CSØI	←	A120
B20	IMHZ−	←	D116
B21	GND	→	
B22	GND	→	
B23	IRØ3− (TP)	→	B60
B24	RESVD		
B25	IØCLI−	←	B112
B26	ØPDO2−	→	C59
B27	SACKI−	←	D116
B28	10MHZ−	→	D116
B29	ØPDO3−	→	C59
B30	RESVD		
B31	RESVD		
B32	RESVD		
B33	+5V	→	
B34	+5V	→	
B35	BSØ8 (TP)	→	B105
B36	GØ	←	B120
B37	IØ−	←	A118
B38	START−	←	B122
B39	SPARE		
B40	BSØ6 (TP)	→	B105
B41	IRI5− (TP)	→	D60
B42	IØSØI	→	A119
B43	PØ5− NØT USED		
B44	SPARE		
B45	SPARE		
B46	GND	→	
B47	GND	→	
B48	PAUSF	←	D110
B49	BSØ7 (TP)	→	B105
B50	BSØ5 (TP)	→	B105
B51	BSØ2 (TP)	→	C105
B52	PØØ−	←	B99
B53	BSØI (TP)	→	C105
B54	RSVP	←	C118
B55	IØ	←	A120
B56	+5V	→	
B57	+5V	→	
B58	DLY	←	A108
B59	INTFJ	←	A104
B60	RESVD		
B61	20MHZ	←	B111
B62	FC2−	←	A64
B63	ENDP	→	A106
B64	GND	→	
PIN B65	GND	→	

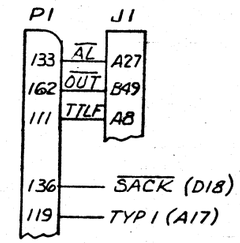

REVISIONS			
SYM	DESCRIPTION	DATE	APPROVAL

PROPRIETARY RIGHTS NOTICE

THIS DOCUMENT AND INFORMATION THAT IT CONTAINS ARE THE PROPERTY OF COMPUTER AUTOMATION, INC. RIGHTS TO DUPLICATE OR OTHERWISE COPY THIS DOCUMENT AND RIGHTS TO DISCLOSE THE DOCUMENT AND SUCH INFORMATION TO OTHERS AND THE RIGHT TO USE THE INFORMATION CONTAINED THEREIN, MAY BE ACQUIRED ONLY BY WRITTEN PERMISSION SIGNED BY A DULY AUTHORIZED OFFICER OF COMPUTER AUTOMATION, INC.

SIZE		REV
D	75-53506-XX	45
SCALE=		SHT. 2 OF

75-53506-XX

REVISIONS			
SYM	DESCRIPTION	DATE	APPROVAL

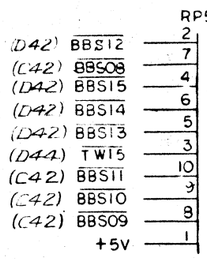

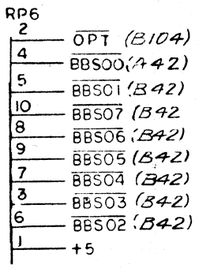

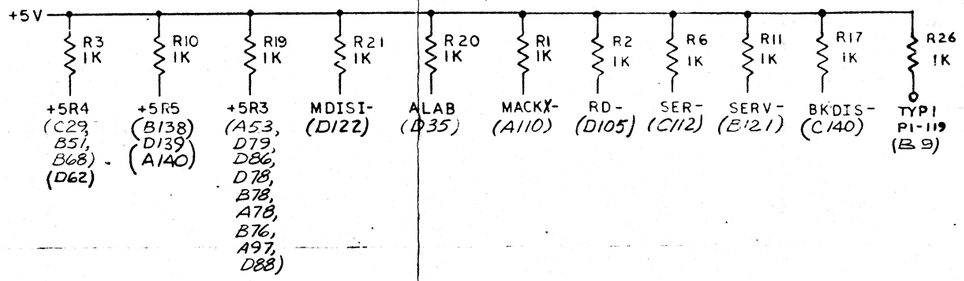

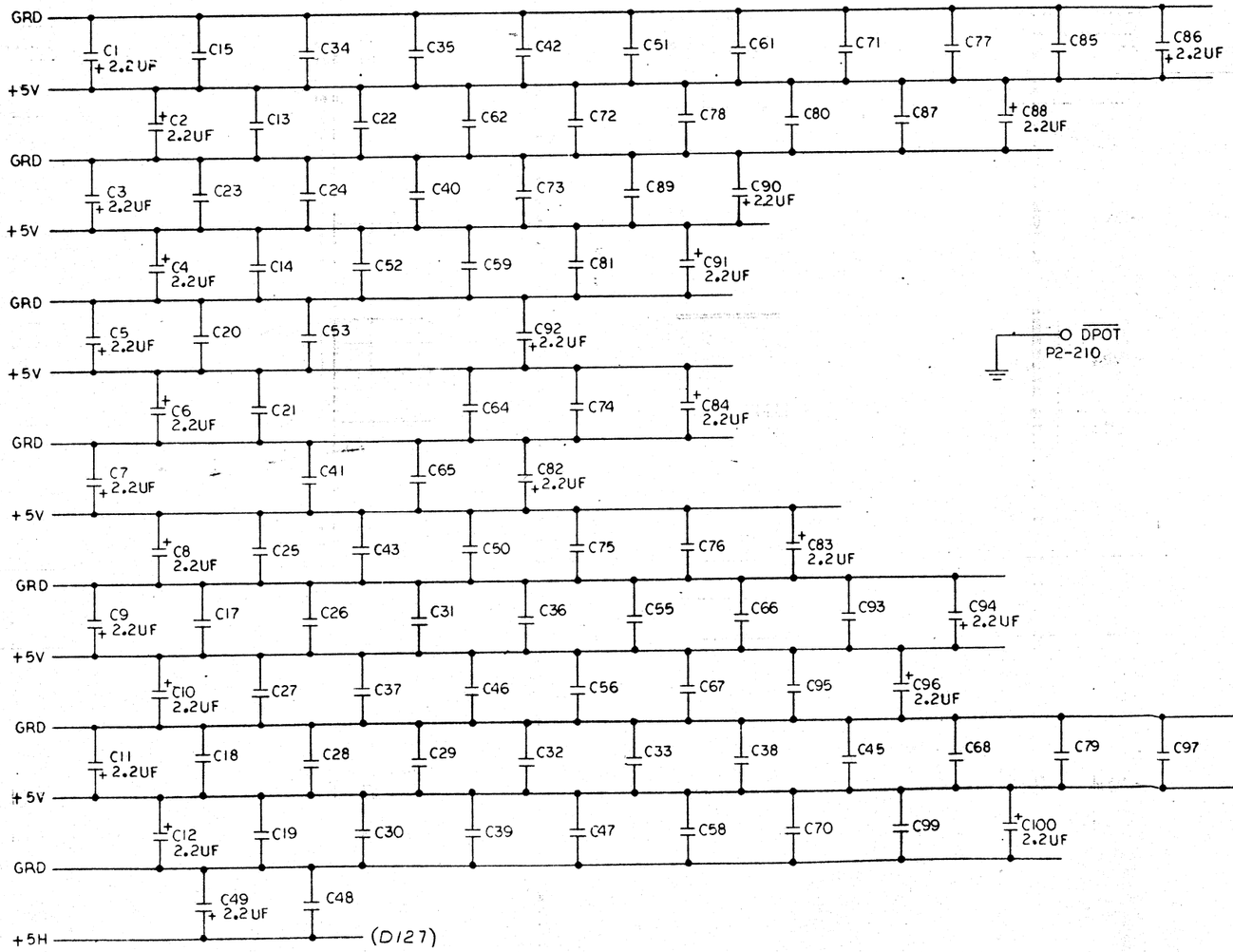

PULLUPS

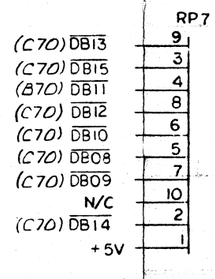

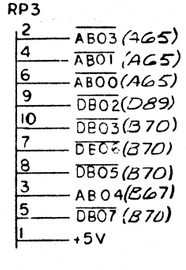

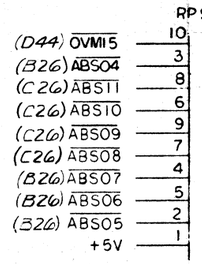

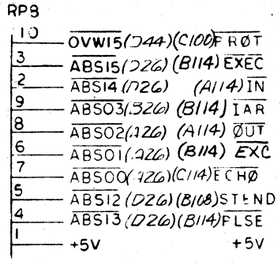

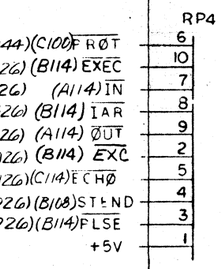

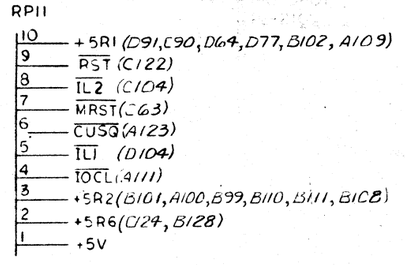

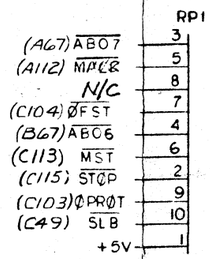

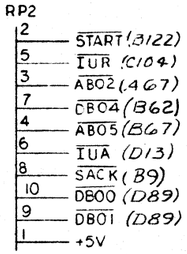

PROPRIETARY RIGHTS NOTICE
THIS DOCUMENT AND INFORMATION THAT IT CONTAINS ARE THE PROPERTY OF COMPUTER AUTOMATION, INC. RIGHTS TO DUPLICATE OR OTHERWISE COPY THIS DOCUMENT AND RIGHTS TO DISCLOSE THE DOCUMENT AND SUCH INFORMATION TO OTHERS AND THE RIGHT TO USE THE INFORMATION CONTAINED THEREIN MAY BE ACQUIRED ONLY BY WRITTEN PERMISSION SIGNED BY A DULY AUTHORIZED OFFICER OF COMPUTER AUTOMATION, INC.

SIZE	75-53506-XX	REV
D		145
SCALE=	SHT. 5 OF	

REVISIONS					
REV	DESCRIPTION	DR	CH	DATE	APPROVAL

(A86,D53) ØVCLK — 74H00 — (C85) ØVO1

FILS (D70,C95) — (D69) — FILS — 74S04

P3

11 FRSO1

10 FRSO0

09 FWSO1 (B80)

03 FWSO0 (B80)

(B61) IRO3 — 7438

(B61) IRO5 — 7438

(B61) IRO2 — 7438

7438

7438

7438

SPECIAL FILE ADDRESS

FWSO1 — HEX D F/F 49 — 74S174 — LFWO1

FWSO0 — LFWO0

(D35) EB15 — EBS14 — EBS13 — EBS12 (D36) — (D27) — FL15 FL14 FL13 FL12

(C80) WSTB — (A19) +5R4

HEX D F/F 50 — 74S174

EBS11 — EBS10 — EBS09 — EBS08 (C36) — (C27) — FL11 FL10 FL09 FL08

(B36) EBS07 — (B36) EBS06 — (B27) — FL07 FL06

HEX D F/F 51 — 74S174

(B36) EBS05 — (B36) EBS04 — (B27) — FL05 FL04

EBS03 — EBS02 — EBS01 — EBS00 (A36) — (A27) — FL03 FL02 FL01 FL00

P3 18 FREU

P3 29 FREL

FILE LATCH

(D28) FL15 FL14 FL13 FL12 — 74170 — ABS15 ABS14 ABS13 ABS12 (D37, C19)

(C28) FL11 FL10 FL09 FL08 — 74170 — ABS11 ABS10 ABS09 ABS08 (C37, C20)

(C28) FL07 FL06 — (B28) FL05 FL04 — 74170 — ABS07 ABS06 ABS05 ABS04 (B37, C20)

(B28) FL03 FL02 FL01 FL00 — 74170 — ABS03 ABS02 ABS01 ABS00 (A37, C19)

FRSO1 — FRSO0 — FREU — FREL — LFWO1 — LFWO0 — (A28) FWUL — RSB RSA REN WSB WSA WEN — 4×4 REG FILE

P3 15 FWUL — (B27, C27, D27)

FILES

PROPRIETARY RIGHTS NOTICE

THIS DOCUMENT AND INFORMATION THAT IT CONTAINS ARE THE PROPERTY OF COMPUTER AUTOMATION, INC. RIGHTS TO DUPLICATE OR OTHERWISE COPY THIS DOCUMENT AND RIGHTS TO DISCLOSE THE DOCUMENT AND SUCH INFORMATION TO OTHERS AND THE RIGHT TO USE THE INFORMATION CONTAINED THEREIN, MAY BE ACQUIRED ONLY BY WRITTEN PERMISSION SIGNED BY A DULY AUTHORIZED OFFICER OF COMPUTER AUTOMATION, INC.

SIZE		REV
D	75-53506-XX	H5
SCALE:	SHT. 4 OF	

RICHO® GRAPHICS/ACCUPRESS RECORDER NO. 7309

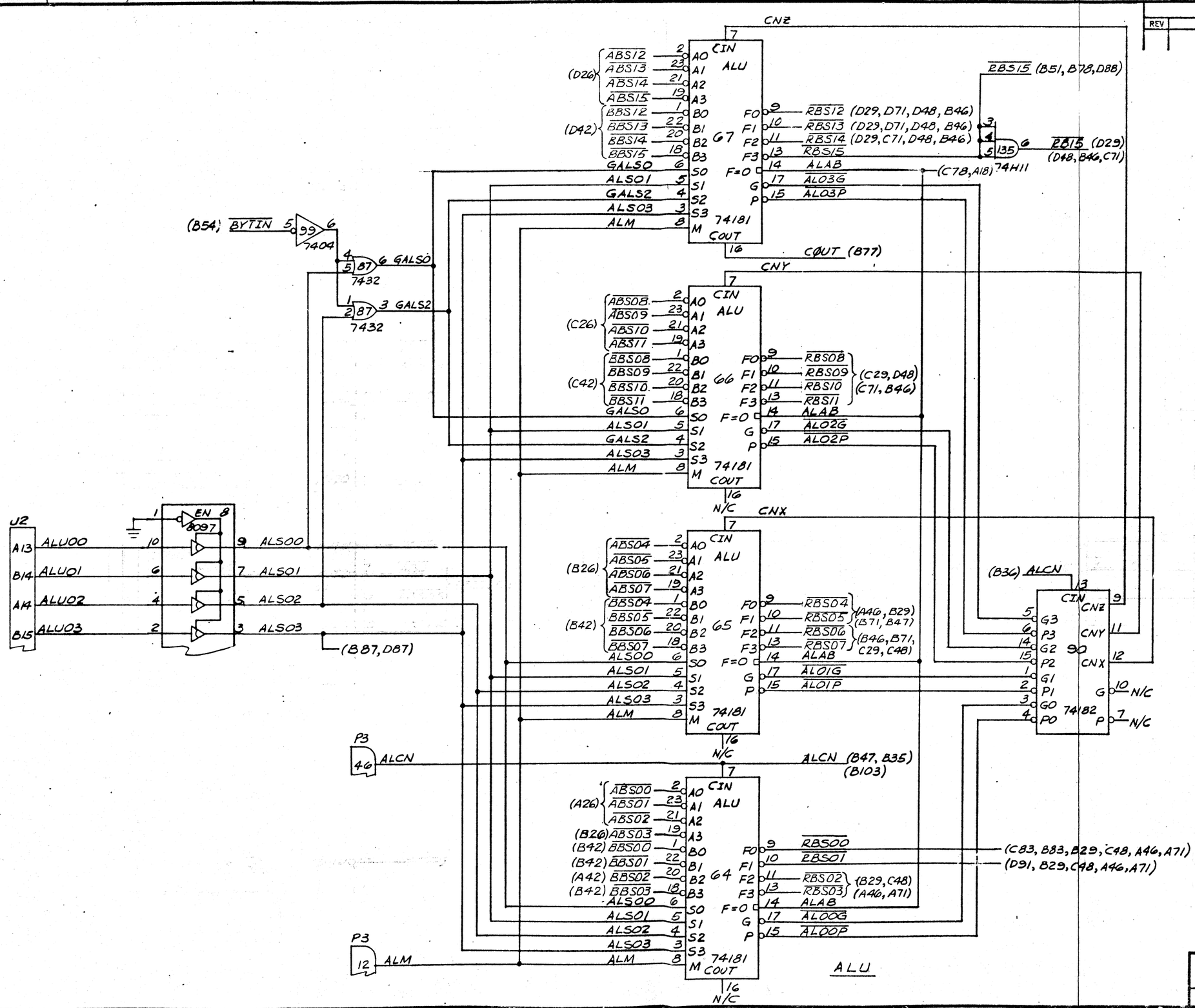

REVISIONS					
REV	DESCRIPTION	DR	CH	DATE	APPROVAL

PROPRIETARY RIGHTS NOTICE
THIS DOCUMENT AND INFORMATION THAT IT CONTAINS ARE THE PROPERTY OF COMPUTER AUTOMATION, INC. RIGHTS TO DUPLICATE OR OTHERWISE COPY THIS DOCUMENT AND RIGHTS TO DISCLOSE THE DOCUMENT AND SUCH INFORMATION TO OTHERS AND THE RIGHT TO USE THE INFORMATION CONTAINED THEREIN, MAY BE ACQUIRED ONLY BY WRITTEN PERMISSION SIGNED BY A DULY AUTHORIZED OFFICER OF COMPUTER AUTOMATION, INC.

SIZE		REV
D	75-53506-XX	H5
SCALE=	SHT. 5 OF	

DRAWING NO. 75-53506-XX REV. H5

REVISIONS					
REV	DESCRIPTION	DR	CH	DATE	APPROVAL

W SHIFT REGISTER

M SHIFT REGISTER

SHIFT MUX LINKING

M/W TO BBUS

PROPRIETARY RIGHTS NOTICE
THIS DOCUMENT AND INFORMATION THAT IT CONTAINS ARE THE PROPERTY OF COMPUTER AUTOMATION, INC. RIGHTS TO DUPLICATE OR OTHERWISE COPY THIS DOCUMENT AND RIGHTS TO DISCLOSE THE DOCUMENT AND SUCH INFORMATION TO OTHERS AND THE RIGHT TO USE THE INFORMATION CONTAINED THEREIN, MAY BE ACQUIRED ONLY BY WRITTEN PERMISSION SIGNED BY A DULY AUTHORIZED OFFICER OF COMPUTER AUTOMATION, INC.

SIZE		REV
D	75-53506-XX	H5
SCALE=	SH. 6 OF	

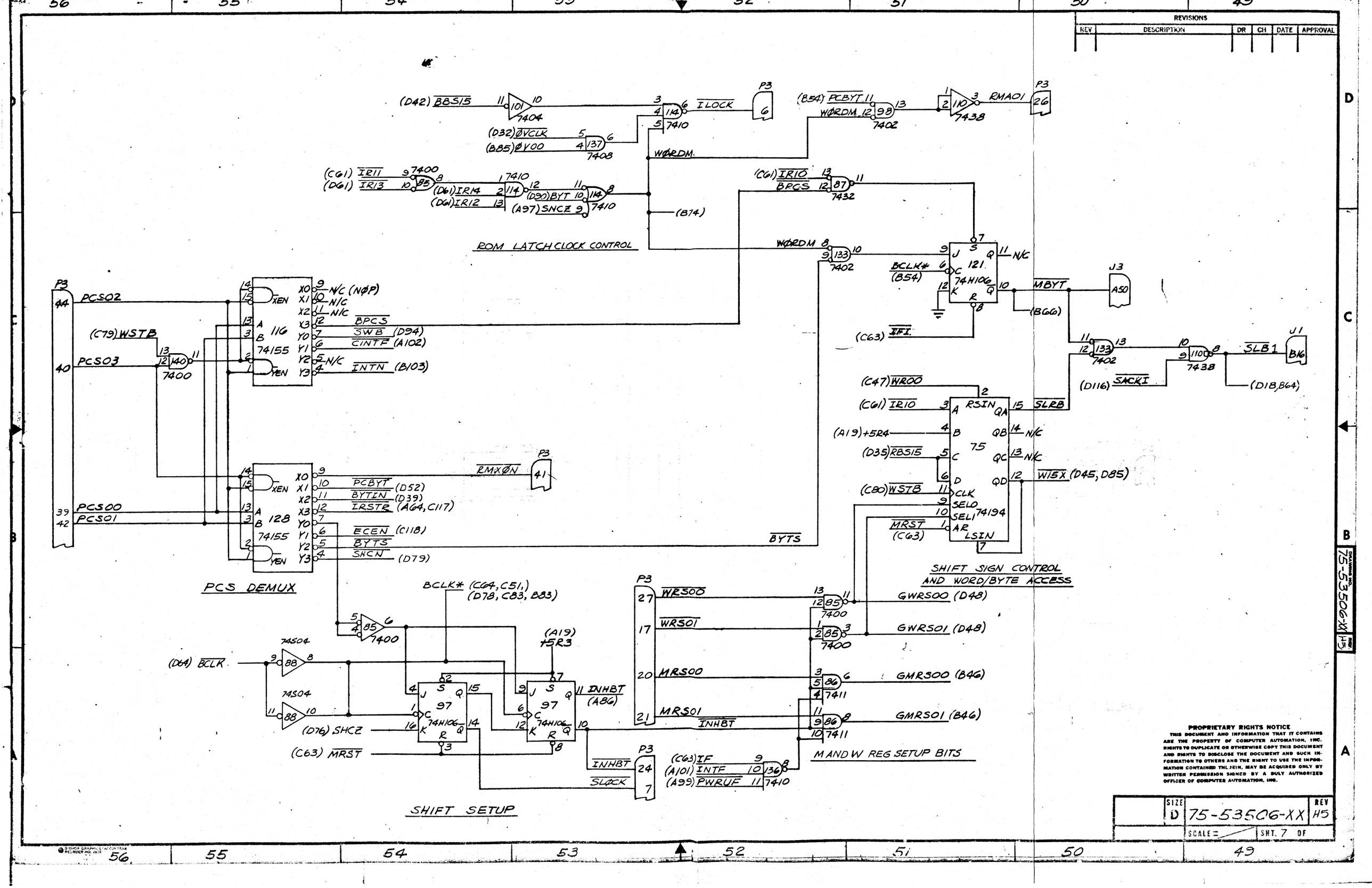

REVISIONS
REV
DESCRIPTION
DR
CH
DATE
APPROVAL
ROM LATCH CLOCK CONTROL
PCS DEMUX
SHIFT SETUP
SHIFT SIGN CONTROL AND WORD/BYTE ACCESS
M AND W REG SETUP BITS
PCS02
PCS03
PCS00
PCS01
(C79) WSTB
(D42) BBS15
(D32) ØVCLK
(B85) ØY00
(C61) IR11
(D61) IR13
(D61) IR14
(D61) IR12
(D90) BYT
(A97) SNCZ
(B74)
ILOCK
WØRDM
(B54) PCBYT
RMA01
(C61) IR10
BPCS
BCLK*
(B54)
MBYT
(B66)
(C63) IFI
SLB1
(D116) SACKI
(D18, B64)
SLRB
(C47) WR00
(A19) +5R4
(D35) RBS15
(C80) WSTB
MRST
(C63)
W15X (D45, D85)
RMXØN
PCBYT (D52)
BYTIN (D39)
IRSTR (A64, C117)
ECEN (C118)
BYTS
SHCN (D79)
BCLK* (C64, C51,) (D78, C83, B83)
(D64) BCLK
(A19) +5R3
INHBT (A86)
(D76) SHCZ
(C63) MRST
SLØCK
WRS00
WRS01
MRS00
MRS01
GWRS00 (D48)
GWRS01 (D48)
GMRS00 (B46)
GMRS01 (B46)
(C63) IF
(A101) INTF
(A99) PWRUF
PROPRIETARY RIGHTS NOTICE
THIS DOCUMENT AND INFORMATION THAT IT CONTAINS ARE THE PROPERTY OF COMPUTER AUTOMATION, INC. RIGHTS TO DUPLICATE OR OTHERWISE COPY THIS DOCUMENT AND RIGHTS TO DISCLOSE THE DOCUMENT AND SUCH INFORMATION TO OTHERS AND THE RIGHT TO USE THE INFORMATION CONTAINED THEREIN, MAY BE ACQUIRED ONLY BY WRITTEN PERMISSION SIGNED BY A DULY AUTHORIZED OFFICER OF COMPUTER AUTOMATION, INC.
SIZE D
75-53506-XX
REV H5
SCALE =
SHT. 7 OF
DRAWING NO. 75-53506-XX
REV H5

REVISIONS					
REV	DESCRIPTION	DR	CH	DATE	APPROVAL

(A55, D79)
+5R1 (C18)
(C121) RST
P3 43 BCLK
130 7474
N/C
RSTF (C94)
(D122) MDISI
75452P
MRST
P3 48
(C92, B91, C90)
(A92, B77, A55, B102)
(B99, C48, D48, B51)
(B76, A109, B109, C109)
(C111, C18)

(A54) BCLK*
(C73) TSTR
74H00
P3 28 SIF
74S113
IFI
(C96, D72, D70, D79, C78, C51)
IF
P3 49
(A92, A52)
(C90, D78, B99)

IFI
+5V
R25 1K
(D115) SACKI
118 8097
IF
P1 110
N/C
IF*
J1 B07
+5V
R34 1K
+5V
R33 1K
(C49) SLBI
8097
SLB
P1 120

J2 B62 PO2
7402
(D86, A102, B99)
ICLK
(D77)
(B54) IRSTR
(B115) PLSEI
7402

I REG CLOCK

(A19) +5R4
J1 P1

A43 156	(C70) DB15	74175 31	IR15 (A60, D58) (D60, C60)	IR15 (C60)	J2 B41
B43 155	(C70) DB14		IR14 (D58) (D60, A60)	IR14 (D54, C60)	B6
B42 154	(D70) DB13		IR13 (A60, C58) (D54, D60, C60)	IR13 (C60)	A6
A42 153	(D70) DB12		IR12 (C58, B86) (B76, B60, C60)	IR12 (D54, C60)	B12
A40 152	(C70) DB11	74175 19	IR11 (C58, B60) (D54, C60)	IR11 (B74, A77, D80)	B8
B40 151	(C70) DB10		IR10 (B60, C58, B85) (C51, D52, C85)	IR10 (B77)	A25
B38 150	(C70) DB09		IR09 (B60) (C58)	IR09 (B77, B86)	B7
A38 149	(C70) DB08		IR08 (B60) (C58)	IR08 (B77)	A7
A39 147	(B70) DB06	74175 30	IR06 (B69) (B96, B58)	IR06 (D74)	A4
B39 148	(B70) DB07		IR07 (B69) (B96, B58)	IR07 (B77)	A3
B33 146	(B70) DB05		IR05 (B96) (B58, A69)	IR05 (C31)	B5
A33 145	(D18, B70) DB04		IR04 (B96) (B58, A69)	IR04 (B60, D78, C74)	B16
B32 142	(A70) DB03	74175 29	IR03 (A69) (B96, B58)	IR03 (B60, C31, D80)	B23
A32 141	(D89) DB02		IR02 (A69, A98, C96, B58)	IR02 (C31, D79, B94) (B69, B98 C96, B58)	A38
B31 140	(D89) DB01		IR01 (C96, B58)	IR01 (D79, B94)	B4
A31 139	(D89) DB00		IR00 (B69, B98, C96, A58)	IR00 (D79, B94)	A05

ICLK

I REG

(D61) IR15 IR14 IR13 IR12 — 44 7420 — 8 RCHG — 11 — 32 7410 — ØPDO5 — (B60) — J2 B18
(D61) IR15 IR14 — 44 7420 — 6 SHIFT — 9
(D61) IR13 IR12 — 56 7410 — 8 — 1 — 57 7400 — ØPDO4 — (B60) — A17
(D61) IR15 IR14 IR13 — 59 74H11 — 12 IRI — 2 — 32 7410 — (D61) IR12, (C61) IR11 — 9 — 57 7400 — ØPDO3 — B29
JØC (B86) (C85)
(D61) IR15 IR14 IR13 — 56 7410 — 12 — 5 — 56 7410 — 6 — ØPDO2 — B26
(D61) IR15, (C61) IR10 — 57 7400 — 6

(C59) ØPDO4
(D59) ØPDO5
(C61) IR11
(B61) IR03, (C61) IR08
(D61) IR12
(B61) IR04, (C61) IR09
(C61) IR11
74153 20 — ADI, MO, M1, M2, M3, MEN, NO, N1, N2, N3, NEN; ADO, MOUT, NOUT
7 — ØPDOO — A18
9 — ØPDO1 — B17
2 — 58 7427 — 12
4 — 3 — 32 7410 — 6
(D61) IR14 IR13 IR15

PRE CODE

J2 A8 I8I5
EN 43 8097
(D61) IR15 IR14 IR13 IR12 — BBS15 BBS14 BBS13 BBS12 — (D42)
EN 42 8097
(C61) IR11 IR10 IR09 IR08 — BBS11 BBS10 BBS09 BBS08 — (C42)
J2 A9 I6I7
EN
(B61) IR07 — BBS07
(C61) IR06 — BBS06
EN 41 8097
(B61) IR05 IR04 — BBS05 BBS04 — (B42)
J2 B9 IL6
EN 8097
(B61) IR03 — BBS03 (B42)
(B61) IR02 — BBS02 (A42)
(A61) IR01 — BBS01 (B42)
(A61) IR00 — BBS00 (B42)

I REG TO BBUS

PROPRIETARY RIGHTS NOTICE
THIS DOCUMENT AND INFORMATION THAT IT CONTAINS ARE THE PROPERTY OF COMPUTER AUTOMATION, INC. RIGHTS TO DUPLICATE OR OTHERWISE COPY THIS DOCUMENT AND RIGHTS TO DISCLOSE THE DOCUMENT AND SUCH INFORMATION TO OTHERS AND THE RIGHT TO USE THE INFORMATION CONTAINED THEREIN, MAY BE ACQUIRED ONLY BY WRITTEN PERMISSION SIGNED BY A DULY AUTHORIZED OFFICER OF COMPUTER AUTOMATION, INC.

SIZE		REV
D	75-53506-XX	H5
SCALE:	SHT. 8 OF	

75-53506-XX H5

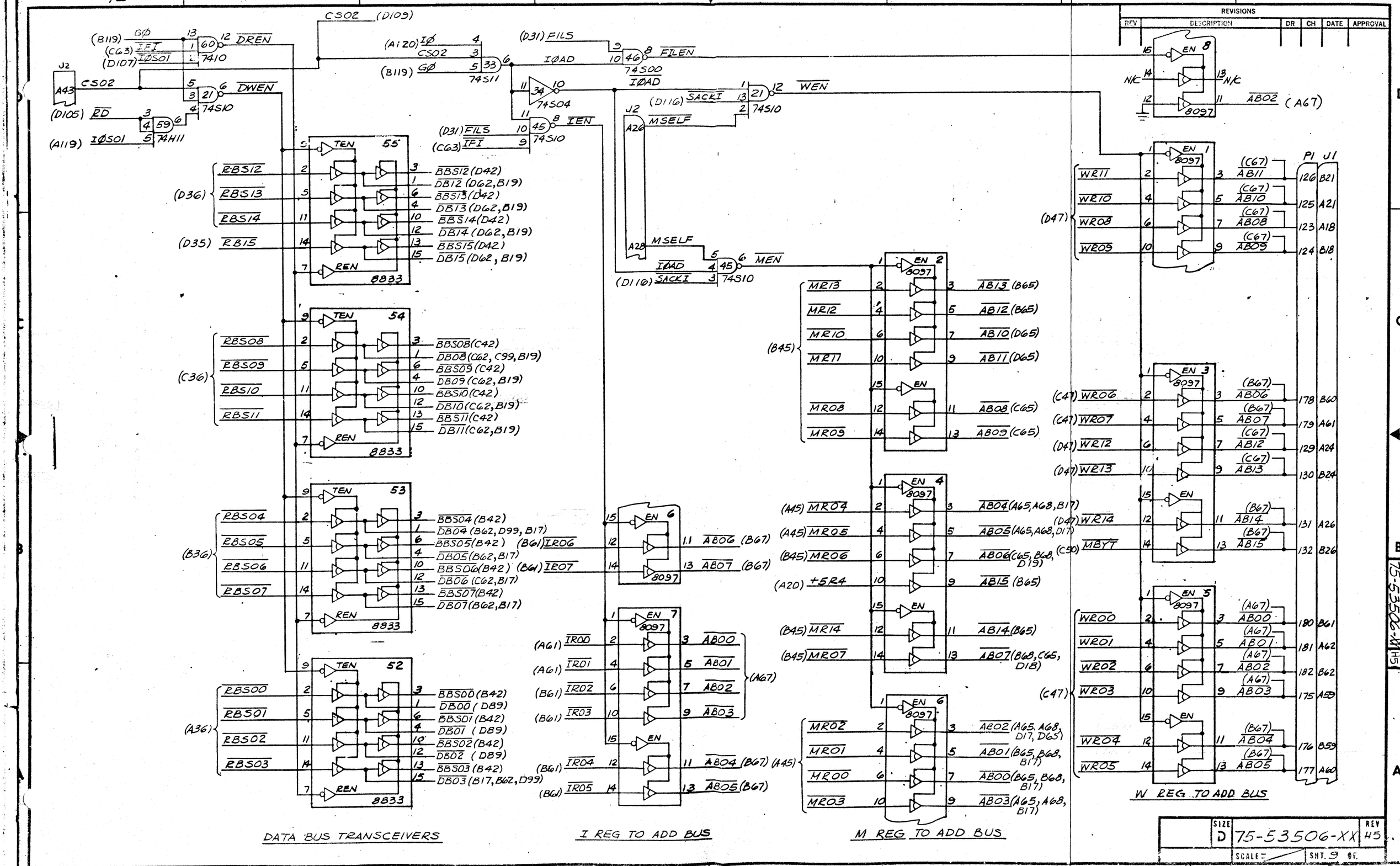

REVISIONS
REV
DESCRIPTION
DR
CH
DATE
APPROVAL
DATA BUS TRANSCEIVERS
I REG TO ADD BUS
M REG TO ADD BUS
W REG TO ADD BUS
SIZE
D
75-53506-XX
REV
H5
SCALE
SHT. 9 OF

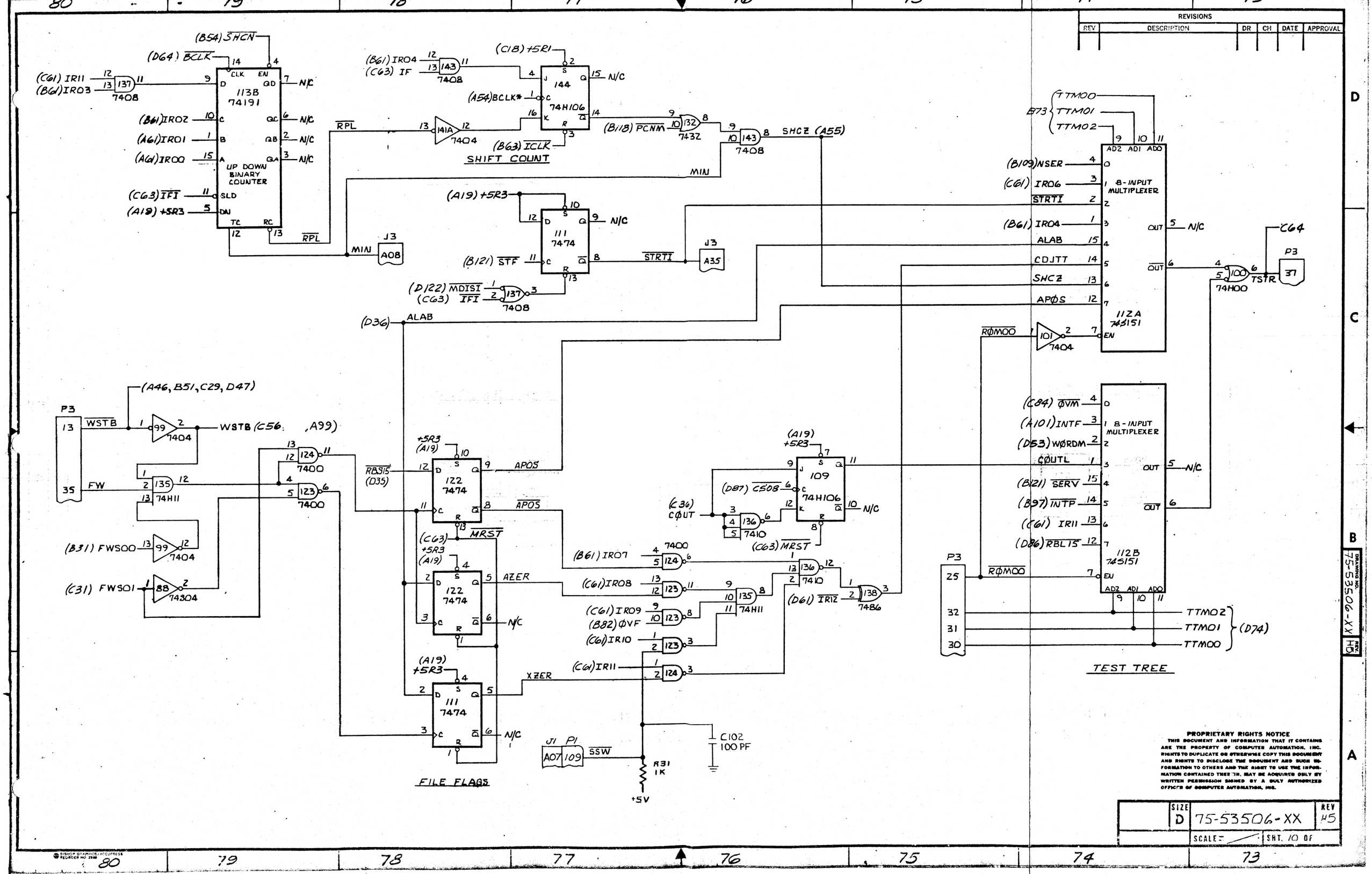

REVISIONS
REV
DESCRIPTION
DR
CH
DATE
APPROVAL
(B54) SHCN
(D64) BCLK
(C61) IR11
(B61) IR03
137
7408
113B
74191
UP DOWN BINARY COUNTER
(B61) IR02
(A61) IR01
(A61) IR00
(C63) IFI
(A19) +5R3
RPL
MIN
J3
A08
(B61) IR04
(C63) IF
143
7408
(C18) +5R1
144
74H106
(A54) BCLK*
(B63) ICLK
141A
7404
SHIFT COUNT
(B118) PCNM
132
7432
143
7408
SHCZ (A55)
(A19) +5R3
111
7474
(B121) STF
STRTI
J3
A35
(D122) MDISI
(C63) IFI
137
7408
(D36)
ALAB
B73
TTM00
TTM01
TTM02
(B109) NSER
(C61) IR06
STRTI
(B61) IR04
ALAB
CDJTT
SHCZ
APØS
8-INPUT MULTIPLEXER
112A
74S151
OUT
N/C
C64
P3
37
100
74H00
TSTR
RØM00
101
7404
(A46, B51, C29, D47)
P3
13
WSTB
99
7404
WSTB (C56, A99)
35
FW
135
74H11
124
7400
123
7400
(B31) FWS00
99
7404
(C31) FWS01
88
74S04
RBS15 (D35)
+5R3 (A19)
122
7474
APOS
APOS
(C63) MRST
+5R3 (A19)
122
7474
AZER
N/C
(A19) +5R3
111
7474
XZER
N/C
FILE FLAGS
(A19) +5R3
109
74H106
(D87) CS08
(C36) CØUT
136
7410
(C63) MRST
(B61) IR07
124
7400
(C61) IR08
123
(C61) IR09
(B82) ØVF
123
(C61) IR10
123
(C61) IR11
124
135
74H11
136
7410
(D61) IR12
138
7486
J1
P1
A07
109
SSW
R31
1K
+5V
C102
100 PF
(C84) ØVM
(A101) INTF
(D53) WØRDM
CØUTL
(B121) SERV
(B97) INTP
(C61) IR11
(D86) RBL15
8-INPUT MULTIPLEXER
112B
74S151
P3
25
RØM00
32
31
30
TTM02
TTM01
TTM00
(D74)
TEST TREE
PROPRIETARY RIGHTS NOTICE
THIS DOCUMENT AND INFORMATION THAT IT CONTAINS ARE THE PROPERTY OF COMPUTER AUTOMATION, INC. RIGHTS TO DUPLICATE OR OTHERWISE COPY THIS DOCUMENT AND RIGHTS TO DISCLOSE THE DOCUMENT AND SUCH INFORMATION TO OTHERS AND THE RIGHT TO USE THE INFORMATION CONTAINED THEREIN, MAY BE ACQUIRED ONLY BY WRITTEN PERMISSION SIGNED BY A DULY AUTHORIZED OFFICER OF COMPUTER AUTOMATION, INC.
SIZE
D
75-53506-XX
REV
H5
SCALE
SHT. 10 OF
DRAWING NO.
75-53506-XX
REV
H5
80
79
78
77
76
75
74
73

REVISIONS					
REV	DESCRIPTION	DR	CH	DATE	APPROVAL

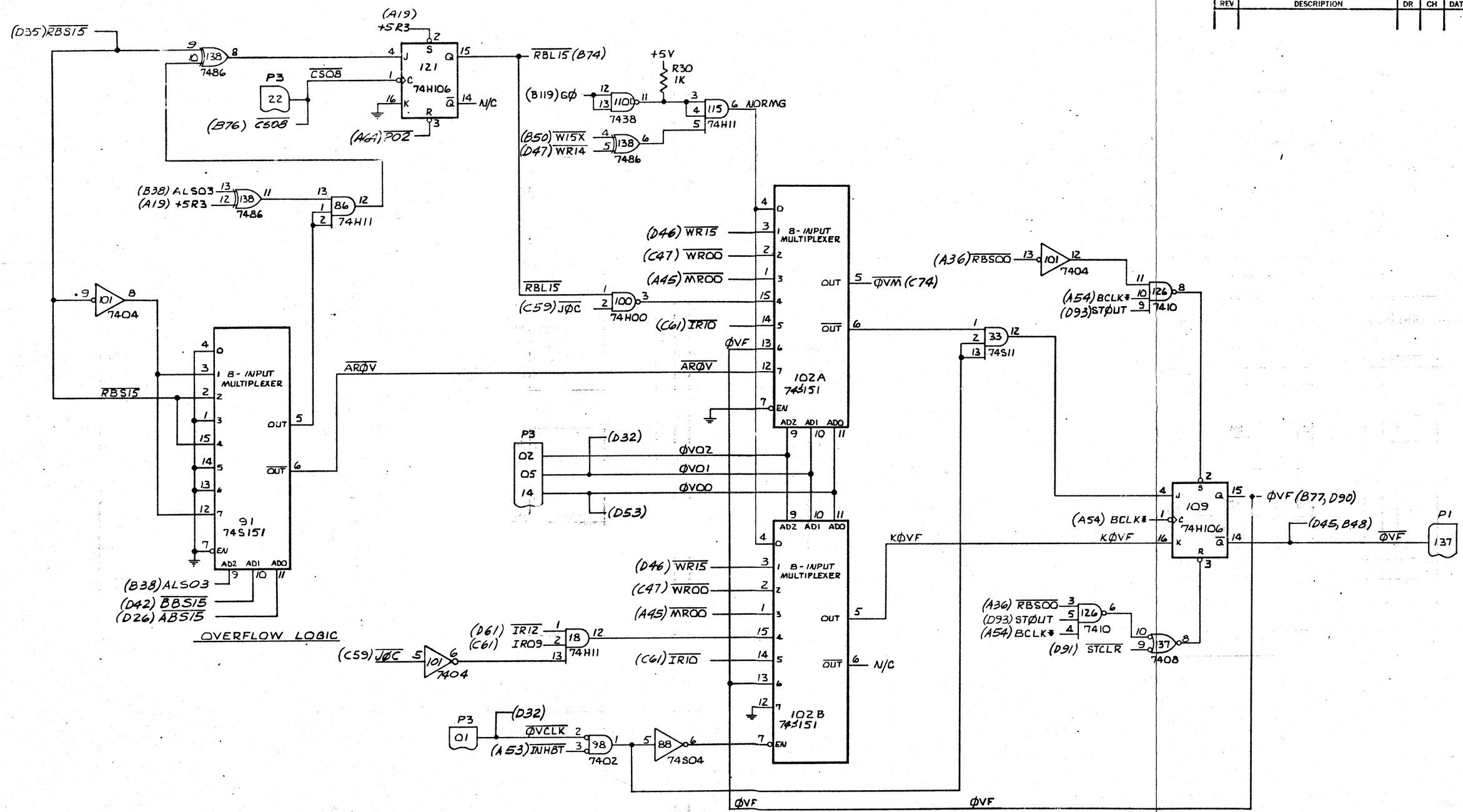

PROPRIETARY RIGHTS NOTICE

THIS DOCUMENT AND INFORMATION THAT IT CONTAINS ARE THE PROPERTY OF COMPUTER AUTOMATION, INC. RIGHTS TO DUPLICATE OR OTHERWISE COPY THIS DOCUMENT AND RIGHTS TO DISCLOSE THE DOCUMENT AND SUCH INFORMATION TO OTHERS AND THE RIGHT TO USE THE INFORMATION CONTAINED THEREIN, MAY BE ACQUIRED ONLY BY WRITTEN PERMISSION SIGNED BY A DULY AUTHORIZED OFFICER OF COMPUTER AUTOMATION, INC.

SIZE		REV
D	75-53506-XX	H5
SCALE =	SHT. 11 OF	

DRAWING NO. 75-53506-XX REV. H5

88 87 86 85 84 83 82 81

REVISIONS					
REV	DESCRIPTION	DR	CH	DATE	APPROVAL

STATUS IN/ØUT

(A114) ØUT — 141A 7404 — ØUT(A99)

ØUT(A99) — 140 7400 — STØUT — 141A 7404 — STØUT(C83, B83)

STØUT — (A99) — (C54) SWB — 140 7400

STIN

(B61) IRQ2, (A61) IRQ1, (A61) IRQ0, (C63) IFI — 127 74H11 — DFZER

(D116) SACKI — 115 74H11 — (D31) FILS

(A114) IN — 141A 7404 — 140 7400 — 125 7402 — (B115) PLSEI

(D63) RSTF — 125 7402 — STCLR

DFZER — P3 45

DAZER(A99)

(B61) IRQ7, (C61) IRQ6, (B61) IRQ5, (B61) IRQ4, (B61) IRQ3 — 18 74H11 — 124 7400 — CLKF

(B114) EXC — 99 7404

DUAL 2 TO 4 DECODER 141B 74155

(A61) IR00 — A
(A61) IR01 — B
(B61) IR02 — XEN

YEN — Y0 N/C; Y1 SCIE; Y2 SCID; Y3 STRP; X0 N/C; X1 N/C; X2 SPFE; X3 SPFD

STCLR(B83)

(A36) RBSO1 — 117 7474 — BYT(C115)

BYT(D53)

(C18)+5R1

(B102)INT — 7438 — DBO2 (A70, B62, C99, B18)

DBO1 (A70, A62, C99, D18)

(B82)ØVF — DBO0 (A70, A62, D18)

STIN

STATUS IN

J3 A04

CIE(D103)

SCIE

(D101) CIO2 — 142 74H106 — N/C

SCID — (C63) MRST — 143 7408

STRP

TRPF — 142 74H106 — N/C

(B114) IAR — 34 74S04 — IAR(C102)

MRST (C63)

PROCESSOR FLAG CONTROL

(C18)+5R1 — (D103) — TRP — J3 A01

TRPF — 130 7474 — N/C

(C63) IF

(C63) MRST

PFR AND CONSOLE ENABLE CONTROL

SPFE

(C63) IF — 129 74H106 — 129 74H106

(C63) MRST — 143 7408 — SPFD

(B102) — 127 74H11 — PFE — J3 A06

PROPRIETARY RIGHTS NOTICE
THIS DOCUMENT AND INFORMATION THAT IT CONTAINS ARE THE PROPERTY OF COMPUTER AUTOMATION, INC. RIGHTS TO DUPLICATE OR OTHERWISE COPY THIS DOCUMENT AND RIGHTS TO DISCLOSE THE DOCUMENT AND SUCH INFORMATION TO OTHERS AND THE RIGHT TO USE THE INFORMATION CONTAINED THEREIN, MAY BE ACQUIRED ONLY BY WRITTEN PERMISSION SIGNED BY A DULY AUTHORIZED OFFICER OF COMPUTER AUTOMATION, INC.

SIZE	DRAWING NO.	REV
D	75-53506-XX	H5
SCALE=	SHT. 12 OF	

BISHOP GRAPHICS/ACCUPRESS REORDER NO 3999

REVISIONS					
REV	DESCRIPTION	DR	CH	DATE	APPROVAL

INTERRUPT DETECTION

INTERRUPT VECTOR

SIN COUNTER

PROPRIETARY RIGHTS NOTICE
THIS DOCUMENT AND INFORMATION THAT IT CONTAINS ARE THE PROPERTY OF GOUPUTER AUTOMATION, INC. RIGHTS TO DUPLICATE OR OTHERWISE COPY THIS DOCUMENT AND RIGHTS TO DISCLOSE THE DOCUMENT AND SUCH INFORMATION TO OTHERS AND THE RIGHT TO USE THE INFORMATION CONTAINED THEREIN, MAY BE ACQUIRED ONLY BY WRITTEN PERMISSION SIGNED BY A DULY AUTHORIZED OFFICER OF GOMPUTER AUTOMATION, INC.

SIZE		REV
D	75-53506-XX	H5
SCALE=	SHT. 13 OF	

DRAWING NO. 75-53506-XX H5

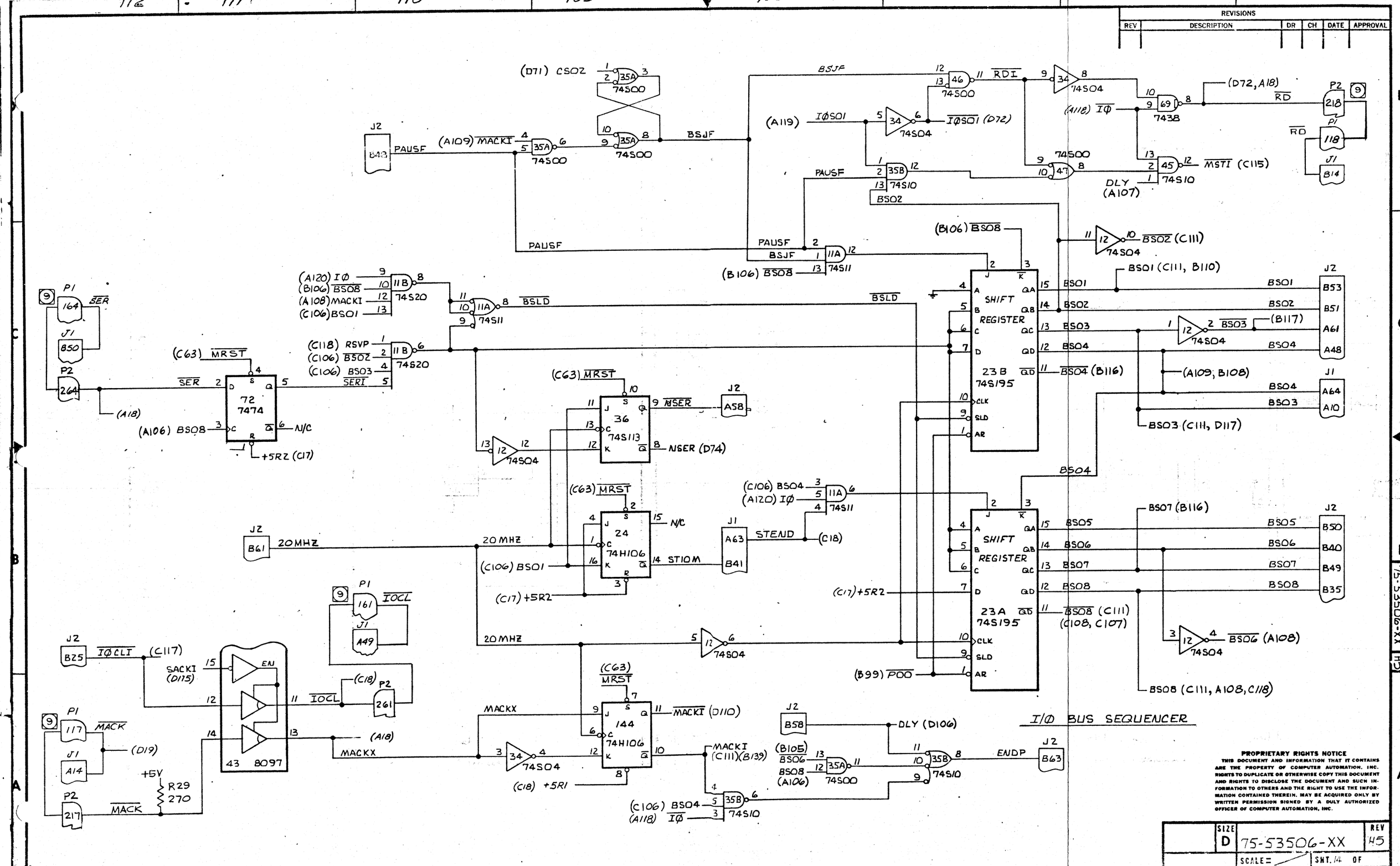

REVISIONS
REV
DESCRIPTION
DR
CH
DATE
APPROVAL
(D71) CSO2
74S00
BSJF
PAUSF
(A109) MACKI
74S00
74S00
BSJF
(A119) IØSO1
74S04
IØSO1 (D72)
74S00
RDI
74S04
(A118) IØ
7438
(D72, A18)
RD
P2
218
P1
118
J1
B14
74S10
BSO2
74S00
MSTI (C115)
DLY (A107)
74S10
PAUSF
PAUSF
BSJF
74S11
(B106) BSO8
(B106) BSO8
74S04
BSO2 (C111)
BSO1 (C111, B110)
(A120) IØ
(B106) BSO8
(A108) MACKI
(C106) BSO1
74S20
74S11
BSLD
BSLD
SHIFT REGISTER
23B
74S195
BSO1
BSO2
BSO3
BSO4
BSO4 (B116)
BSO3
(B117)
74S04
(A109, B108)
BSO3 (C111, D117)
J2
B53
B51
A61
A48
J1
A64
A10
P1
164
SER
J1
850
P2
264
(A18)
(C63) MRST
SER
72
7474
(A106) BSO8
N/C
+5R2 (C17)
(C118) RSVP
(C106) BSO2
(C106) BSO3
SERI
74S20
(C63) MRST
36
74S113
NSER
NSER (D74)
74S04
J2
A58
(C63) MRST
24
74H106
N/C
STIOM
(C106) BSO1
(C17) +5R2
J1
A63
B41
STEND
(C18)
(C106) BSO4
(A120) IØ
74S11
BSO4
SHIFT REGISTER
23A
74S195
BSO5
BSO6
BSO7
BSO8
BSO7 (B116)
BSO8 (C111)
(C108, C107)
(C17) +5R2
(B99) POO
BSO6 (A108)
BSO8 (C111, A108, C118)
J2
B50
B40
B49
B35
J2
B61
20MHZ
20MHZ
20MHZ
74S04
P1
161
IOCL
J1
A49
J2
B25
IØCLI
(C117)
SACKI (D115)
EN
IOCL
(C18)
P2
261
P1
117
MACK
J1
A14
(D19)
P2
217
MACK
+5V
R29
270
43
8097
(A18)
MACKX
MACKX
(C63) MRST
144
74H106
MACKI (D110)
74S04
(C18) +5R1
MACKI (C111)(B139)
(C106) BSO4
(A118) IØ
74S10
J2
B58
DLY (D106)
(B105) BSO6
BSO8 (A106)
74S00
74S10
ENDP
J2
B63
I/Ø BUS SEQUENCER
PROPRIETARY RIGHTS NOTICE
THIS DOCUMENT AND INFORMATION THAT IT CONTAINS ARE THE PROPERTY OF COMPUTER AUTOMATION, INC. RIGHTS TO DUPLICATE OR OTHERWISE COPY THIS DOCUMENT AND RIGHTS TO DISCLOSE THE DOCUMENT AND SUCH INFORMATION TO OTHERS AND THE RIGHT TO USE THE INFORMATION CONTAINED THEREIN, MAY BE ACQUIRED ONLY BY WRITTEN PERMISSION SIGNED BY A DULY AUTHORIZED OFFICER OF COMPUTER AUTOMATION, INC.
SIZE
D
75-53506-XX
REV
H5
SCALE=
SHT. 14 OF
DRAWING NO. 75-53506-XX
REV H5
112
111
110
109
108
107
106
105

REVISIONS					
REV	DESCRIPTION	DR	CH	DATE	APPROVAL

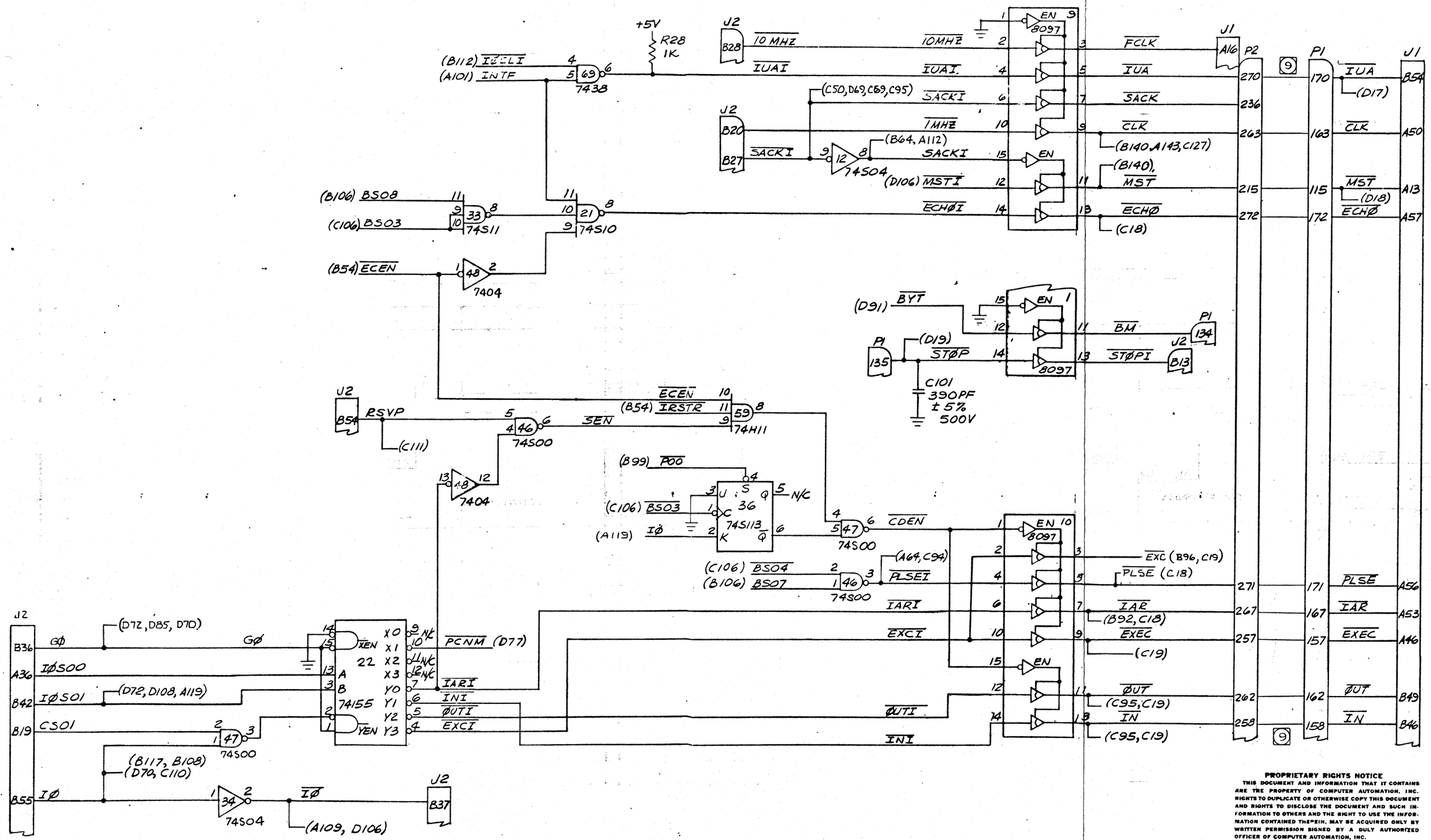

PROPRIETARY RIGHTS NOTICE

THIS DOCUMENT AND INFORMATION THAT IT CONTAINS ARE THE PROPERTY OF COMPUTER AUTOMATION, INC. RIGHTS TO DUPLICATE OR OTHERWISE COPY THIS DOCUMENT AND RIGHTS TO DISCLOSE THE DOCUMENT AND SUCH INFORMATION TO OTHERS AND THE RIGHT TO USE THE INFORMATION CONTAINED THEREIN, MAY BE ACQUIRED ONLY BY WRITTEN PERMISSION SIGNED BY A DULY AUTHORIZED OFFICER OF COMPUTER AUTOMATION, INC.

SIZE		REV
D	75-53506-XX	H5
SCALE =	SHT. 15 OF	

DRAWING NO. 75-53506-XX REV. H5

BISHOP GRAPHICS/ACCUPRESS REORDER NO. 2559

120 119 118 117 116 115 114 113

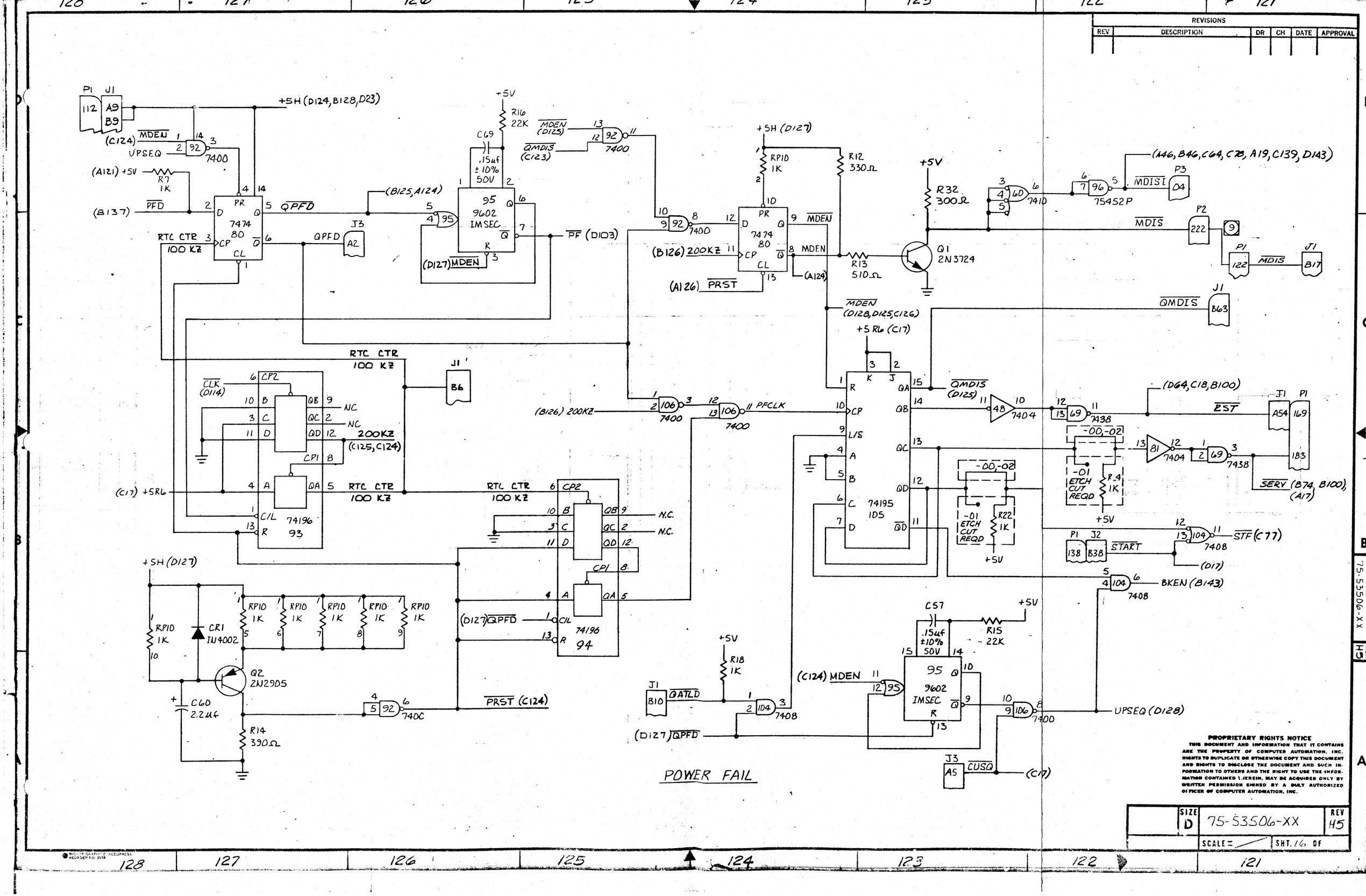

REVISIONS
REV
DESCRIPTION
DR
CH
DATE
APPROVAL
P1 J1
112 A9 B9
+5H (D124, B128, D23)
(C124) MDEN
UPSEQ
92 7400
(A121) +5V
R7 1K
(B137) PFD
7474 80
QPFD
RTC CTR 100 KZ
J3 A2
(B125, A124)
+5V
R16 22K
C69 .15uf ±10% 50V
95 9602 IMSEC
(D127) MDEN
PF (D103)
MDEN (D125)
QMDIS (C123)
+5H (D127)
RP10 1K
R12 330Ω
(B126) 200KZ
(A126) PRST
MDEN
(A124)
R13 510Ω
Q1 2N3724
R32 300Ω
+5V
(A46, B46, C64, C78, A19, C139, D143)
MDISI
P3 04
75452P
MDIS
P2 222
P1 122
J1 B17
QMDIS
J1 B63
MDEN (D128, D125, C126)
+5 R6 (C17)
74195 1D5
QMDIS (D125)
48 7404
(D64, C18, B100)
EST
J1 A54
P1 169
183
7438
-00, -02
-01 ETCH CUT REQD
R4 1K
SERV (B74, B100), (A17)
R22 1K
P1 138
J2 B38
START
STF (C77)
(D17)
BKEN (B143)
RTC CTR 100 KZ
J1 B6
CLK (D114)
CP2
NC
200KZ (C125, C124)
CP1
74196 93
(C17) +5R6
(B126) 200KZ
PFCLK
74196 94
N.C.
(D127) QPFD
+5H (D127)
RP10 1K
CR1 1N4002
Q2 2N2905
C60 2.2uf
R14 390Ω
PRST (C124)
R18 1K
J1 B10
QATLD
(D127) QPFD
C57 .15uf ±10% 50V
R15 22K
(C124) MDEN
95 9602 IMSEC
UPSEQ (D128)
J3 A5
CUSQ
(C17)
POWER FAIL
PROPRIETARY RIGHTS NOTICE
THIS DOCUMENT AND INFORMATION THAT IT CONTAINS ARE THE PROPERTY OF COMPUTER AUTOMATION, INC. RIGHTS TO DUPLICATE OR OTHERWISE COPY THIS DOCUMENT AND RIGHTS TO DISCLOSE THE DOCUMENT AND SUCH INFORMATION TO OTHERS AND THE RIGHT TO USE THE INFORMATION CONTAINED THEREIN, MAY BE ACQUIRED ONLY BY WRITTEN PERMISSION SIGNED BY A DULY AUTHORIZED OFFICER OF COMPUTER AUTOMATION, INC.
SIZE D
75-53506-XX
REV H5
SCALE =
SHT. 16 OF
DRAWING NO. 75-53506-XX
REV H5
128 127 126 125 124 123 122 121

REVISIONS					
REV	DESCRIPTION	DR	CH	DATE	APPROVAL

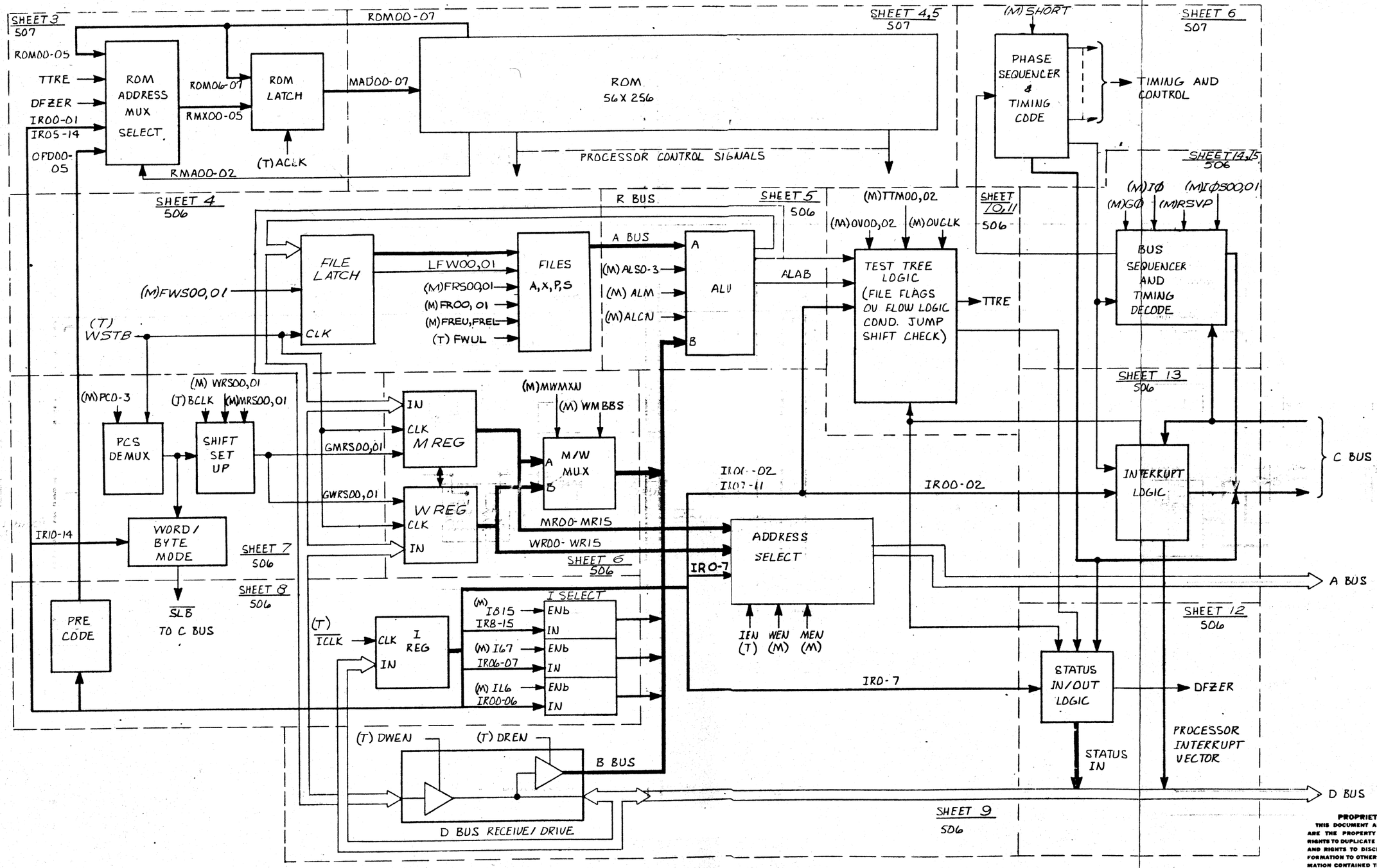

2. (T) DESIGNATES TIMING AND CONTROL SIGNALS.
1. (M) DESIGNATES PROCESSOR (ROM) CONTROL SIGNALS.

NOTES- UNLESS OTHERWISE SPECIFIED

LSI-2 BLOCK DIAGRAM

PROPRIETARY RIGHTS NOTICE
THIS DOCUMENT AND INFORMATION THAT IT CONTAINS ARE THE PROPERTY OF COMPUTER AUTOMATION, INC. RIGHTS TO DUPLICATE OR OTHERWISE COPY THIS DOCUMENT AND RIGHTS TO DISCLOSE THE DOCUMENT AND SUCH INFORMATION TO OTHERS AND THE RIGHT TO USE THE INFORMATION CONTAINED THEREIN, MAY BE ACQUIRED ONLY BY WRITTEN PERMISSION SIGNED BY A DULY AUTHORIZED OFFICER OF COMPUTER AUTOMATION, INC.

SIZE	DRAWING NO.	REV
D	75-53506-XX	H5
SCALE=	SHT. 17 OF	

BISHOP GRAPHICS/ ACCUPRESS RECORDER NO. 2959

136 135 134 133 132 131 130 129

REVISIONS					
REV	DESCRIPTION	DR	CH	DATE	APPROVAL

THIS SHEET CONTAINS PROPRIETARY INFORMATION.
WHICH MAY NOT BE REPRODUCED

PROPRIETARY RIGHTS NOTICE
THIS DOCUMENT AND INFORMATION THAT IT CONTAINS ARE THE PROPERTY OF COMPUTER AUTOMATION, INC. RIGHTS TO DUPLICATE OR OTHERWISE COPY THIS DOCUMENT AND RIGHTS TO DISCLOSE THE DOCUMENT AND SUCH INFORMATION TO OTHERS AND THE RIGHT TO USE THE INFORMATION CONTAINED THEREIN, MAY BE ACQUIRED ONLY BY WRITTEN PERMISSION SIGNED BY A DULY AUTHORIZED OFFICER OF COMPUTER AUTOMATION, INC.

SIZE		REV
D	75-53506-XX	H5
SCALE=	SHT. 18 OF 18	

144 143 142 141 140 139 138 137