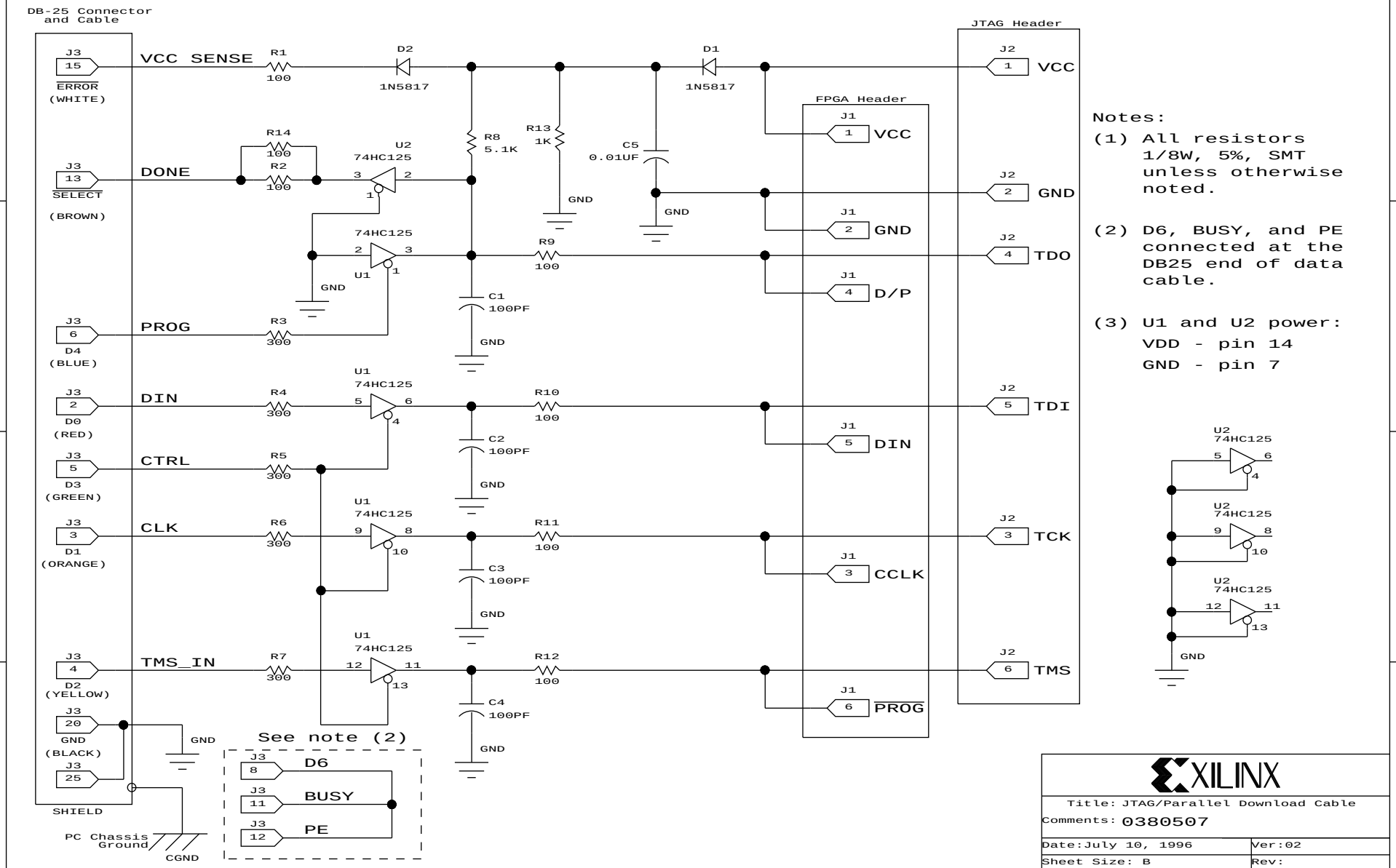
DB-25 Connector and Cable
JTAG Header
FPGA Header
VCC SENSE
DONE
PROG
DIN
CTRL
CLK
TMS_IN
ERROR (WHITE)
SELECT (BROWN)
D4 (BLUE)
D0 (RED)
D3 (GREEN)
D1 (ORANGE)
D2 (YELLOW)
GND (BLACK)
SHIELD
PC Chassis Ground
CGND
R1 100
R2 100
R3 300
R4 300
R5 300
R6 300
R7 300
R8 5.1K
R9 100
R10 100
R11 100
R12 100
R13 1K
R14 100
C1 100PF
C2 100PF
C3 100PF
C4 100PF
C5 0.01UF
D1 1N5817
D2 1N5817
U1 74HC125
U2 74HC125
GND
See note (2)
D6
BUSY
PE
VCC
GND
TDO
D/P
TDI
DIN
TCK
CCLK
TMS
PROG
Notes:
(1) All resistors 1/8W, 5%, SMT unless otherwise noted.
(2) D6, BUSY, and PE connected at the DB25 end of data cable.
(3) U1 and U2 power:
VDD - pin 14
GND - pin 7
XILINX
Title: JTAG/Parallel Download Cable
Comments: 0380507
Date:July 10, 1996
Ver:02
Sheet Size: B
Rev: